SAN JUAN BAUTISTA
The City of History

City of San Juan Bautista

CONTRACT DOCUMENTS - VOLUME 2
DRAWINGS FOR THE CONSTRUCTION OF:

SANITARY SEWER FORCE MAIN TO HOLLISTER PROJECT

BID SET

December 2022

Stantec

V:\1840\active\184031441\drawing\cad\31441-0001 & Cover.dwg
Dec 02, 2022 - 8:21am

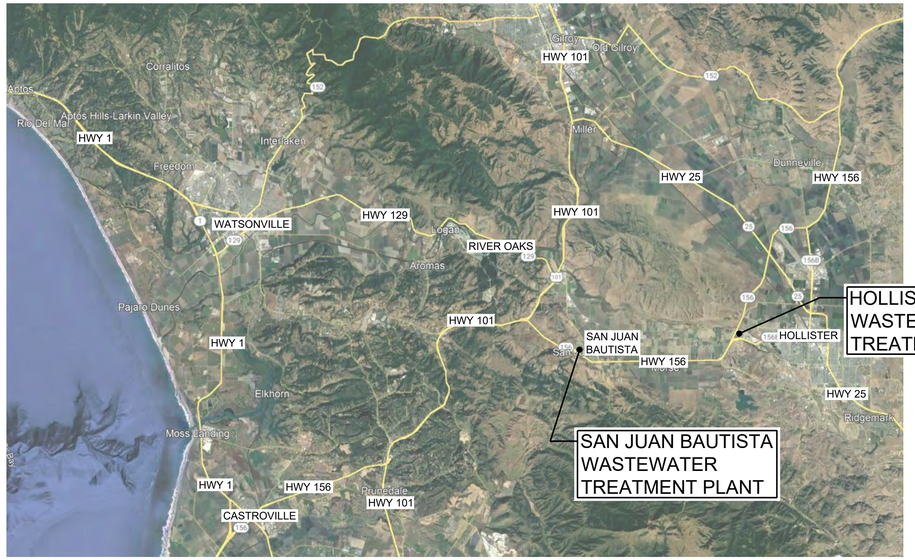

VICINITY MAP

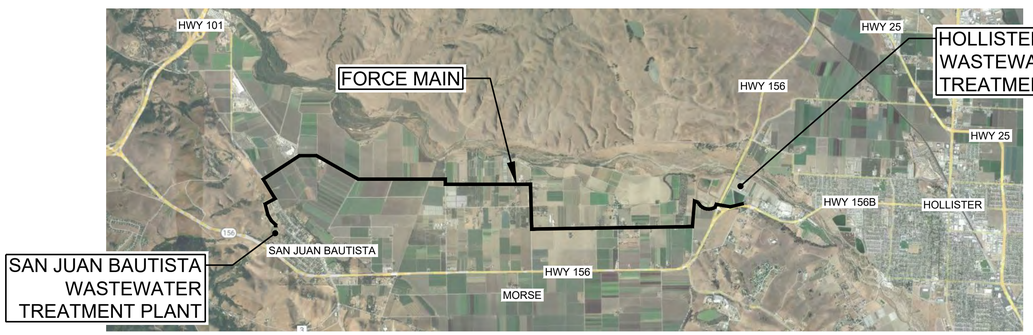

LOCATION MAP

SAN JUAN BAUTISTA
The City of History

City of San Juan Bautista

CONTRACT DOCUMENTS - VOLUME 2
DRAWINGS FOR THE CONSTRUCTION OF:

SANITARY SEWER
FORCE MAIN TO HOLLISTER
PROJECT

BID SET

December 2022

SUBMITTED : _____
Gabriel Aronow, Project Manager CE 55307

City of San Juan Bautista APPROVAL : _____
Douglas S. Pike, PE / for
Paul H. Greenway, City Engineer

City of Hollister APPROVAL : _____
Mark Falgout, PE City Engineer

County of San Benito APPROVAL : _____
Steve Loupe, PE County Engineer

Revision	By	Appd.	YY.MM.DD
BID SET	KM	GIA	2022.12.30
PERMIT SET	KM	GIA	2022.10.10
Issued	By	Appd	YYYY.MM.DD

Permit/Seal
REGISTERED PROFESSIONAL ENGINEER GABRIEL I. ARONOW No.55307 Exp.12/31/24 CIVIL STATE OF CALIFORNIA
12/30/2022

Consultant

Stantec
Stantec Consulting Services Inc.
3875 Atherton Road
Rocklin CA 95765-3716
Tel: (916) 773-8100
www.stantec.com

Copyright Reserved
The Contractor shall verify and be responsible for all dimensions. DO NOT scale the drawing - any errors or omissions shall be reported to Stantec without delay.
The Copyrights to all designs and drawings are the property of Stantec. Reproduction or use for any purpose other than that authorized by Stantec is forbidden.

Client/Project Logo

Client/Project
City of San Juan Bautista
SANITARY SEWER FORCE MAIN TO HOLLISTER PROJECT
San Juan Bautista, California

File Name: 31441-G001 & COVER	ASB Dwn.	KM Dsgn.	GIA Chkd.	2022.12.30 YYYY.MM.DD

Title
PROJECT TITLE AND LOCATION & VICINITY MAPS

Project No.	Scale
184031441	AS SHOWN
Revision	Sheet
0	1 of 128

Drawing No. G001

ORIGINAL SHEET - ANSI D
\\1.1MD\.cpdlv\184031441\drawing\dgn\31441-g001 & cover 2022.12.02 7:35:59 AM

DRAWING INDEX

SHT No.	DWG No.	DWG TITLE
1	G001	PROJECT TITLE AND LOCATION & VICINITY MAPS
2	G002	INDEX OF DRAWINGS AND STANDARD NOTES 1
3	G003	STANDARD NOTES 2
4	G004	LEGENDS, PIPING SYSTEM SYMBOLS AND ABBREVIATIONS
5	G005	ABBREVIATIONS
6	G006	PROCESS FLOW DIAGRAM
7	G007	TRAFFIC CONTROL PLAN
8	D001	EMERGENCY STORAGE BASIN 1 & 2 DEMOLITION
9	D002	UV DISINFECTION CHANNEL AND FILTER SYSTEM DEMOLITION
10	D003	CHLORINATION FACILITIES DEMOLITION
11	D020	CONTROL BUILDING AND HEADWORKS DEMOLITION PLAN
12	D100	HEADWORKS DEMOLITION PLAN AND SECTION
13	D200	EXISTING CONTROL BUILDING AND STORAGE BAYS - DEMOLITION PLAN AND DETAIL
14	C001	TYPICAL CIVIL DETAILS
15	C002	TYPICAL CIVIL DETAILS
16	C003	TYPICAL CIVIL DETAILS
17	C004	TYPICAL CIVIL DETAILS
18	C005	TYPICAL CIVIL DETAILS
19	C006	TYPICAL CIVIL DETAILS
20	CS01	STORMWATER BEST MANAGEMENT PRACTICES TYPICAL DETAILS
21	C020	WWTP GENERAL PLANT SITE PLAN
22	C021	CONTROL BUILDING AND HEADWORKS SITE PLAN
23	C022	FLUSH & EQUALIZATION TANKS PLAN, SECTION AND DETAIL
24	C023	YARD PIPING DETAILS
25	C024	REMOTE PIGGING STATION 1 PLAN, SECTION AND DETAIL
26	C025	REMOTE PIGGING STATION 2 PLAN AND SECTION
27	C026	10" FORCE MAIN CONNECTION TO HOLLISTER WWTP MH No.B10-1 & PIG RECEIVING STATION PLAN, SECTION AND DETAIL
28	C027	AERIAL PIPE CROSSING AT CREEK ALONG FIRST STREET PLAN AND SECTION
29	C028	AERIAL PIPE CROSSING AT CREEK ALONG PRESCOTT ROAD PLAN AND SECTION
30	C031	GRADING AND PAVING PLAN
31	C040	CIVIL SHEET KEY PLAN, SURVEY CONTROL INFO. & DESIGNATED STAGING AREAS MAP
32	C041	PLAN AND PROFILE SJBWWTP SITE AND THIRD ST STA. 0+00 TO 10+00
33	C042	PLAN AND PROFILE THIRD ST AND RANCHO WAY STA. 10+00 TO 20+00
34	C043	PLAN AND PROFILE -RANCHO WAY, CAETANO PL AND FIRST ST STA. 20+00 TO 30+00
35	C044	PLAN AND PROFILE -FIRST ST/SAN JAUN HWY AND PRESCOTT RD STA. 30+00 TO 40+00
36	C045	PLAN AND PROFILE PRESCOTT RD STA. 40+00 TO 50+00
37	C046	PLAN AND PROFILE PRESCOTT RD STA. 50+00 TO 60+00
38	C047	PLAN AND PROFILE PRESCOTT RD AND SAN JUSTO RD STA. 60+00 TO 70+00
39	C048	PLAN AND PROFILE SAN JUSTO RD STA.70+00 TO 80+00
40	C049	PLAN AND PROFILE SAN JUSTO RD STA. 80+00 TO 90+00
41	C050	PLAN AND PROFILE SAN JUSTO RD STA. 90+00 TO 100+00
42	C051	PLAN AND PROFILE SAN JUSTO RD STA. 100+00 TO 110+00
43	C052	PLAN AND PROFILE SAN JUSTO RD STA. 110+00 TO 120+00
44	C053	PLAN AND PROFILE SAN JUSTO RD STA. 120+00 TO 130+00
45	C054	PLAN AND PROFILE SAN JUSTO RD STA. 130+00 TO 140+00
46	C055	PLAN AND PROFILE SAN JUSTO RD STA. 140+00 TO 150+00
47	C056	PLAN AND PROFILE SAN JUSTO RD & LUCY BROWN LN STA. 150+00 TO 160+00
48	C057	PLAN AND PROFILE LUCY BROWN LN AND DUNCAN AVE STA. 160+00 TO 170+00
49	C058	PLAN AND PROFILE DUNCAN AVE STA. 170+00 TO 180+00
50	C059	PLAN AND PROFILE DUNCAN AVE STA. 180+00 TO 190+00
51	C060	PLAN AND PROFILE DUNCAN AVE STA. 190+00 TO 200+00
52	C061	PLAN AND PROFILE DUNCAN AVE STA. 200+00 TO 210+00
53	C062	PLAN AND PROFILE DUNCAN AVE AND BIXBY RD STA. 210+00 TO 220+00
54	C063	PLAN AND PROFILE BIXBY RD STA. 220+00 TO 230+00
55	C064	PLAN AND PROFILE BIXBY RD STA. 230+00 TO 240+00
56	C065	PLAN AND PROFILE BIXBY RD AND FREITAS RD STA. 240+00 TO 250+00
57	C066	PLAN AND PROFILE FREITAS RD STA. 250+00 TO 260+00
58	C067	PLAN AND PROFILE FREITAS RD STA. 260+00 TO 270+00
59	C068	PLAN AND PROFILE FREITAS RD STA. 270+00 TO 280+00
60	C069	PLAN AND PROFILE FREITAS RD STA. 280+00 TO 290+00
61	C070	PLAN AND PROFILE FREITAS RD STA. 290+00 TO 300+00
62	C071	PLAN AND PROFILE FREITAS RD STA. 300+00 TO 310+00
63	C072	PLAN AND PROFILE FREITAS RD STA. 310+00 TO 320+00
64	C073	PLAN AND PROFILE FREITAS RD STA. 320+00 TO 330+00
65	C074	PLAN AND PROFILE FREITAS RD STA. 330+00 to 340+00
66	C075	PLAN AND PROFILE FREITAS RD AND MITCHELL RD STA. 340+00 TO 350+00
67	C076	PLAN AND PROFILE MITCHELL RD AND HOLLISTER WWTP ACCESS RD STA. 350+00 TO 360+00
68	C077	PLAN AND PROFILE HOLLISTER WWTP ACCESS ROAD STA. 360+00 TO 370+00
69	C078	PLAN AND PROFILE HOLLISTER WWTP ACCESS ROAD STA. 370+00 TO 380+00
70	C079	PLAN AND PROFILE HOLLISTER WWTP ACCESS ROAD STA. 380+00 TO 390+00
71	C080	PLAN AND PROFILE HOLLISTER WWTP ACCESS ROAD STA. 390+00 TO 395+00
72	C081	NEW SSFM ALIGNMENT CURVE AND LINE TABLES

DRAWING INDEX

SHT No.	DWG No.	DWG TITLE
73	S001	STRUCTURAL TYPICAL NOTES
74	S002	STRUCTURAL TYPICAL NOTES
75	S003	TYPICAL STRUCTURAL DETAILS
76	S004	TYPICAL STRUCTURAL DETAILS
77	S005	TYPICAL STRUCTURAL DETAILS
78	S006	TYPICAL STRUCTURAL DETAILS
79	S007	TYPICAL STRUCTURAL DETAILS
80	S100	PRIMARY PUMP STATION AND EXISTING HEADWORKS OVERALL PLAN
81	S101	PRIMARY PUMP STATION SECTIONS
82	M001	TYPICAL MECHANICAL DETAILS
83	M002	TYPICAL MECHANICAL DETAILS
84	M003	TYPICAL MECHANICAL DETAILS
85	M004	TYPICAL MECHANICAL DETAILS
86	M005	TYPICAL MECHANICAL DETAILS
87	M006	TYPICAL MECHANICAL DETAILS
88	M007	TYPICAL MECHANICAL DETAILS
89	M100	EXISTING HEADWORKS MODIFICATION, STORAGE PUMP STATION AND PRIMARY PUMP STATION OVERALL PLAN
90	M101	EXISTING HEADWORKS MODIFICATION, STORAGE PUMP STATION AND PRIMARY PUMP STATION PARTIAL PLAN & SECTIONS
91	M102	EXISTING HEADWORKS MODIFICATION, STORAGE PUMP STATION AND PRIMARY PUMP STATION PARTIAL PLAN
92	M103	EXISTING HEADWORKS MODIFICATION, STORAGE PUMP STATION AND PRIMARY PUMP STATION SECTIONS
93	M104	EXISTING HEADWORKS MODIFICATION, STORAGE PUMP STATION AND PRIMARY PUMP STATION PLAN, SECTION & DETAILS
94	M105	NEW CHEMICAL FEED SYSTEM PLAN, SECTION AND DETAIL
95	M200	EXISTING CONTROL BUILDING MODIFICATION PLAN
96	E001	ELECTRICAL SYMBOLS
97	E002	ELECTRICAL ABBREVIATIONS AND GENERAL NOTES
98	E003	SINGLE LINE DIAGRAM / LOAD CALCULATIONS
99	E004	MSB-100/MCC-100 ELEVATIONS
100	E005	CONDUIT AND CONDUCTOR SCHEDULE
101	E006	VFD ELEMENTARY DIAGRAM (CONTROLLED FROM MCC)
102	E007	FVNR DIAGRAM (CONTROLLED FROM MCC)
103	E008	TYPICAL CONTROL PANEL ELEVATION
104	E009	TYPICAL CONTROL PANEL ELEMENTARY DIAGRAMS
105	E010	EXAMPLE PLC IO WIRING DIAGRAM 1
106	E011	EXAMPLE PLC IO WIRING DIAGRAM 2
107	E012	EXAMPLE INTERCONNECT DIAGRAM
108	E013	TYPICAL ELECTRICAL DETAILS 1
109	E014	TYPICAL ELECTRICAL DETAILS 2
110	E015	TYPICAL ELECTRICAL DETAILS 3
111	E016	TYPICAL ELECTRICAL DETAILS 4
112	E020	OVERALL ELECTRICAL SITE PLAN
113	E021	CONTROL BUILDING AND HEADWORKS ELECTRICAL PLAN
114	E022	FLUSH AND EQUALIZATION ELECTRICAL PLAN
115	E023	MSB-100 ELECTRICAL PLAN
116	E024	MCC-100 ELECTRICAL PLAN
117	E100	HEADWORKS OVERALL AREA ELECTRICAL PLAN
118	E101	HEADWORKS ELECTRICAL PLAN
119	E105	CHEMICAL SYSTEM ELECTRICAL PLAN
120	E200	EXISTING OPERATIONS BUILDING ELECTRICAL PLAN
121	I001	INSTRUMENT SYMBOLS & ABBREVIATIONS
122	I100	HEADWORKS P&ID
123	I110	PRIMARY PUMP STATION P&ID
124	I120	STATION DISCHARGE P&ID
125	I130	FLUSH & EQUALIZATION P&ID
126	I140	CHEMICAL SYSTEM P&ID
127	I150	EMERGENCY STORAGE P&ID
128	I190	MISCELLANEOUS P&ID

REFERENCE DRAWINGS INCLUDED IN SET:

RANCHO VISTA - TRACT 322 RECORD DRAWINGS - 34 SHEETS

STANDARD NOTES:

GENERAL

1. THESE STANDARD NOTES APPLY TO ALL DRAWINGS.
2. "ENGINEER" IS DEFINED IN THE SUPPLEMENTARY CONDITIONS OF THE SPECIFICATIONS.
3. ALL WORK SHALL CONFORM TO THE CONTRACT SPECIFICATIONS AND TO THE OWNER'S DESIGN STANDARDS. IN CASE OF CONFLICT, THE MOST STRINGENT REQUIREMENT SHALL APPLY.
4. NO WORK SHALL BE STARTED WITHOUT FIRST NOTIFYING THE ENGINEER 48 HOURS PRIOR TO COMMENCEMENT OF WORK.
5. CONTRACTOR SHALL BE RESPONSIBLE FOR SCHEDULING REQUIRED INSPECTIONS AND SHALL GIVE 48 HOURS NOTIFICATION TO THE ENGINEER.
6. THE CONTRACT DRAWINGS AND SPECIFICATIONS REPRESENT THE FINISHED PRODUCT. THEY DO NOT INDICATE THE METHOD OF CONSTRUCTION, UNLESS SPECIFICALLY INDICATED OTHERWISE.
7. WHERE NO SPECIFIC DETAILS ARE SHOWN, CONSTRUCTION SHALL CONFORM TO SIMILAR WORK ON THE PROJECT AND TO APPLICABLE CODES. TYPICAL DETAILS, NOT REFERENCED ON DRAWINGS, APPLY UNLESS NOTED OTHERWISE. WHERE NO DETAILS APPLY, ADHERE TO HOLLISTER AND COUNTY STANDARDS, RESPECTIVELY.
8. WORK DESCRIBED IN THE SPECIFICATIONS AND NOT SHOWN ON THE DRAWINGS, OR SHOWN ON THE DRAWINGS AND NOT DESCRIBED IN THE SPECIFICATIONS, SHALL BE OF LIKE EFFECT AS IF SHOWN OR DESCRIBED IN BOTH. IN CASE OF DIFFERENCES BETWEEN SPECIFICATIONS AND DRAWINGS, THE MORE STRINGENT REQUIREMENT SHALL GOVERN.
9. ALL DIMENSIONS AND DISTANCES ARE TO FACE OF CURB, CURB RETURN, FACE OF BUILDING, FACE OF WALL, FLOW LINE, PROPERTY LINE, CENTER OF STRIPING, CENTERLINE OF PIPE OR LIMITS OF IMPROVEMENTS.
10. ALL QUANTITIES SHOWN IN THE CONTRACT DRAWINGS ARE APPROXIMATE AND USED FOR PERMIT AND BOND PURPOSES ONLY. THEY SHALL NOT BE USED IN ANY WAY FOR BIDDING OR CONSTRUCTION. IT SHALL BE THE CONTRACTOR'S RESPONSIBILITY TO CONDUCT QUANTITY TAKE-OFFS FOR BIDDING AND CONSTRUCTION PURPOSES.
11. CONTRACTOR SHALL BE RESPONSIBLE FOR CONDUCTING HIS/HER OPERATION ENTIRELY WITHIN THE IDENTIFIED ALLOWABLE WORK AREAS OR WITHIN THE RIGHT OF WAYS, OUTSIDE OF DRAINAGE DITCHES. NO WORK OR ACCESS SHALL BE ALLOWED IN THE DRAINAGE DITCHES.
12. THE CONTRACTOR SHALL PROVIDE THE PROJECT ENGINEER WITH A RECORD OF ALL FIELD CHANGES FROM THESE PLANS AND THE PROJECT ENGINEER SHALL SUPPLY THE CITY WITH MYLAR "AS-BUILT" PLANS UPON COMPLETION OF THE PROJECT.

SAFETY

1. CONTRACTOR AGREES THAT THE CONTRACTOR SHALL ASSUME SOLE AND COMPLETE RESPONSIBILITY FOR JOB SITE CONDITIONS DURING THE COURSE OF CONSTRUCTION OF THIS PROJECT, INCLUDING SAFETY OF ALL PERSONS AND PROPERTY. THIS REQUIREMENT SHALL APPLY CONTINUOUSLY AND NOT BE LIMITED TO NORMAL AND CITY WORKING HOURS. THE CONTRACTOR SHALL DEFEND, INDEMNIFY AND HOLD THE OWNER AND THE PROJECT ENGINEER HARMLESS FROM ANY AND ALL LIABILITY, REAL OR ALLEGED, IN CONNECTION WITH THE PERFORMANCE OF WORK ON THIS PROJECT, EXCEPTING FOR LIABILITY ARISING FROM THE SOLE NEGLIGENCE OF THE OWNER OR PROJECT ENGINEER.
2. THE CITY OF SAN JUAN BAUTISTA, CITY OF HOLLISTER AND COUNTY OF SAN BENITO IS A MEMBER OF THE UNDERGROUND SERVICE ALERT (U.S.A.) ONE-CALL PROGRAM. THE CONTRACTOR OR ANY SUBCONTRACTOR FOR THIS CONTRACT SHALL NOTIFY MEMBERS OF U.S.A. TWO (2) WORKING DAYS IN ADVANCE OF PERFORMING ANY EXCAVATION WORK BY CALLING THE TOLL FREE NUMBER (800) 227-2600
3. CONTRACTOR SHALL COMPLY WITH THE RULES AND REGULATIONS OF THE STATE CONSTRUCTION SAFETY ORDER.
4. CONTRACTOR SHALL PROVIDE PROPER SHORING IN ALL TRENCHES DEEPER THAN FIVE FEET. ANY DAMAGE RESULTING FROM LACK OF SHORING SHALL BE THE RESPONSIBILITY OF THE CONTRACTOR. CONTRACTOR SHALL COMPLY WITH ALL OSHA SAFETY REQUIREMENTS.
5. THE CONTRACTOR SHALL MAINTAIN AN ONGOING DUST CONTROL PROGRAM, INCLUDING WATERING OF OPEN AREAS, IN ORDER TO CONFORM WITH THE LATEST STATE AND COUNTY AIR POLLUTION REGULATIONS.
6. CONTRACTOR SHALL PROVIDE ALL LIGHTS, SIGNS, BARRICADES, FLAG PERSONS, OR OTHER DEVICES NECESSARY TO PROVIDE PUBLIC SAFETY AND TO MAINTAIN TRAFFIC CONTROL AT ALL TIMES.
7. ALL EXCAVATION SHALL BE COMPLETE OR BACKFILLED AT THE END OF THE DAY OR COVERED WITH PLATING, UNLESS ALTERNATIVE PROTECTION MEASURES ARE APPROVED BY THE ENGINEER.
8. WHEN STREET WORK OR TRENCHING IS DONE THAT WOULD INTERFERE WITH EMERGENCY RESPONSE TRAFFIC, THE CONTRACTOR SHALL NOTIFY THE FIRE AND POLICE DEPARTMENTS 48-HOURS IN ADVANCE OF THE TIME AND LOCATION OF SUCH CLOSURES. THE CONTRACTOR SHALL AGAIN CONTACT THESE DEPARTMENTS AS SOON AS THE STREET IS REOPENED.
9. THE CONTRACTOR SHALL MAINTAIN AN ONGOING PROCESS OF REMOVAL OF ALL SPILLAGE AND TRACKING OF EXCAVATION MATERIAL ON ALL PAVED STREETS.
10. CONSTRUCTION EQUIPMENT THAT OPERATES AT A NOISE LEVEL IN EXCESS OF 85 DECIBELS (MEASURED ON THE A-WEIGHTED SCALE DEFINED IN ANSI-1.4), AT A DISTANCE OF 100 FEET FROM THE EQUIPMENT, IS PROHIBITED UNLESS AUTHORIZED BY THE ENGINEER.
11. THE CONTRACTOR SHALL PURSUE THE WORK IN A CONTINUOUS AND DILIGENT MANNER, CONFORMING TO ALL PERTINENT SAFETY REGULATIONS, TO ENSURE A TIMELY COMPLETION OF THE PROJECT.

EXISTING CONDITIONS

1. CONTRACTOR SHALL EXAMINE THE PROJECT WORK AREAS PRIOR TO BIDDING TO SATISFY HIMSELF AS TO THE NATURE AND EXTENT OF EXISTING SITE CONDITIONS THAT WILL BE ENCOUNTERED.
2. ALL MEASUREMENTS OF EXISTING TOPOGRAPHY, STRUCTURES AND UTILITIES ARE SUBJECT TO VERIFICATION IN THE FIELD BY THE CONTRACTOR. THE CONTRACTOR SHALL NOTIFY THE ENGINEER OF ANY DISCREPANCIES ON THE DRAWINGS PRIOR TO FABRICATION OR CONSTRUCTION. THE CONTRACTOR WILL BE RESPONSIBLE FOR ANY ERRORS WHICH MAY HAVE BEEN AVOIDED BY FIELD VERIFICATION.
3. DO NOT INTERRUPT EXISTING UTILITIES SERVING OCCUPIED OR USED FACILITIES, EXCEPT WHEN AUTHORIZED BY THE ENGINEER. PROVIDE TEMPORARY SERVICES DURING INTERRUPTIONS TO EXISTING UTILITIES AS REQUIRED.
4. THE TYPES, LOCATIONS, SIZES AND/OR DEPTHS OF EXISTING UNDERGROUND UTILITIES AS SHOWN ON THE IMPROVEMENT PLANS ARE OBTAINED FROM SOURCES OF VARYING RELIABILITY. THE CONTRACTOR IS CAUTIONED THAT ONLY ACTUAL EXCAVATION WILL REVEAL THE TYPES, SIZES, LOCATIONS AND DEPTHS OF SUCH UNDERGROUND UTILITIES. THE PROJECT ENGINEER ASSUMES NO RESPONSIBILITY FOR THE COMPLETENESS OR ACCURACY OF THE DELINEATION OF SUCH UNDERGROUND UTILITIES NOR FOR THE EXISTENCE OF OTHER BURIED OBJECTS OR UTILITIES WHICH ARE NOT SHOWN ON THESE PLANS. THE CONTRACTOR IS HEREBY NOTIFIED THAT, PRIOR TO COMMENCING CONSTRUCTION, HE/SHE IS RESPONSIBLE FOR CONTACTING THE UTILITY COMPANIES INVOLVED AND REQUESTING VISUAL VERIFICATION OF THE LOCATIONS OF THEIR UNDERGROUND FACILITIES SHOWN ON THESE IMPROVEMENT PLANS. THE PROJECT ENGINEER SHALL BE NOTIFIED BY THE CONTRACTOR OF THE SCHEDULED TIME AND PLACE OF SUCH VISUAL VERIFICATION TO ENABLE SAID FIRM TO HAVE A REPRESENTATIVE PRESENT. SHOULD A CONFLICT BECOME APPARENT, THE CONTRACTOR WILL CONTACT THE PARTIES RESPONSIBLE FOR RELOCATION OF THE CONFLICTING FACILITY.
5. THE CONTRACTOR SHALL REMOVE ALL OBSTRUCTIONS, BOTH ABOVE GROUND AND UNDERGROUND, EXCEPT AS NOTED IN ITEM ABOVE, AS NECESSARY FOR THE CONSTRUCTION OF THE PROPOSED IMPROVEMENTS.
6. CONTRACTOR SHALL COORDINATE UTILITY RELATED REQUIREMENTS, INCLUDING APPLICATION FOR SERVICE, WITH UTILITY COMPANIES.
7. REPLACE IN KIND ALL EXISTING STRUCTURES, PAVING AND LANDSCAPING DISTURBED BY CONSTRUCTION UNLESS NOTED OTHERWISE.
8. THE CONTRACTOR SHALL BE RESPONSIBLE FOR THE PROTECTION OF ALL EXISTING SURVEY MONUMENTS AND OTHER SURVEY MARKERS DURING CONSTRUCTION. ALL SUCH MONUMENTS OR MARKERS DESTROYED DURING CONSTRUCTION SHALL BE PLACED AT THE CONTRACTOR'S EXPENSE. CONTRACTOR SHALL NOT DISTURB ANY PERMANENT SURVEY MONUMENT WITHOUT THE CONSENT OF THE ENGINEER. A LICENSED SURVEYOR AT THE CONTRACTOR'S EXPENSE SHALL REPLACE ANY MONUMENTS DISTURBED.
9. THE CONTRACTOR SHALL, AT ALL TIMES DURING CONSTRUCTION, PROTECT FROM DAMAGE EXISTING IMPROVEMENTS ON AND AROUND THE SITE, INCLUDING, BUT NOT LIMITED TO , PAVEMENT, CURB AND GUTTER, SIDEWALK, LANDSCAPING, SIGNAGE, STORM AND SANITARY SEWER AND ALL UTILITIES. THE CONTRACTOR SHALL ASSUME SOLE RESPONSIBILITY FOR THE REPAIR OF ANY IMPROVEMENTS (EXISTING OR PROPOSED) DAMAGED THROUGHOUT THE COURSE OF CONSTRUCTION.
10. THE CONTRACTOR SHALL EXPOSE EXISTING SEWER AND DRAIN LINES FOR THE PROJECT ENGINEER TO VERIFY LOCATION AND ELEVATION PRIOR TO PLACEMENT OF PIPE, WHERE NOTED ON THE DRAWINGS. ALL COSTS OF SUCH EXCAVATION AND BACKFILL SHALL BE INCLUDED IN THE PRICES PAID FOR VARIOUS ITEMS OF WORK.
11. THE CONTRACTOR SHALL ADJUST ALL EXISTING MANHOLES AND VALVE BOXES WITHIN THE WORK AREA TO GRADE UNLESS NOTED OTHERWISE.
12. PRIOR TO WORK ON DRAWINGS THAT TIE INTO EXISTING FACILITIES, THE CONTRACTOR SHALL VERIFY ELEVATIONS SHOWN. IF ELEVATIONS DIFFER FROM THAT SHOWN ON THE PLANS, ADJUSTMENTS TO CONFORM WILL BE MADE BY THE PROJECT ENGINEER.
13. IF UNUSUAL AMOUNTS OF BONE, STONE OR ARTIFACTS ARE UNCOVERED, WORK WITHIN 50 METERS OF THE AREA SHALL CEASE IMMEDIATELY AND A QUALIFIED ARCHAEOLOGIST SHALL BE CONSULTED TO DEVELOP, IF NECESSARY, MITIGATION MEASURES TO REDUCE ANY ARCHAEOLOGICAL IMPACT TO A LESS THAN SIGNIFICANT EFFECT BEFORE CONSTRUCTION RESUMES IN THE AREA.
14. ALL AREAS OF CONSTRUCTION DISTURBANCE WHERE NATURAL COVER AND VEGETATION HAVE BEEN REMOVED SHALL BE HYDRO-SEEDED FOR EROSION CONTROL IN ACCORDANCE WITH THE SPECIFICATIONS.
15. THE CONTRACTOR IS TO VERIFY DEPTH AND LOCATION OF ALL EXISTING UTILITY STUBS PRIOR TO INSTALLATION OF ANY PIPE.

ORIGINAL SHEET - ANSI D

V:\1840\active\184031441\drawing\cad\31441-g002 & g003 2022.10.0 1:58:11 PM

Revision	By	Appd.	YY.MM.DD

PERMIT SET	KM	GIA	2022.10.10
Issued	By	Appd	YYYY.MM.DD

Permit/Seal

REGISTERED PROFESSIONAL ENGINEER GABRIEL I. ARONOW No.55607 Exp.12/31/22 CIVIL STATE OF CALIFORNIA

09/01/2022

Consultant

Stantec

Stantec Consulting Services Inc.
3875 Atherton Road
Rocklin CA 95765-3716
Tel: (916) 773-8100
www.stantec.com

Copyright Reserved

The Contractor shall verify and be responsible for all dimensions. DO NOT scale the drawing - any errors or omissions shall be reported to Stantec without delay.
The Copyrights to all designs and drawings are the property of Stantec. Reproduction or use for any purpose other than that authorized by Stantec is forbidden.

Client/Project Logo

Client/Project

City of San Juan Bautista

SANITARY SEWER FORCE MAIN TO HOLLISTER PROJECT

San Juan Bautista, California

File Name: 31441-G002 & G003	ASB	KM	GIA	2022.10.10
	Dwn.	Dsgn.	Chkd.	YYYY.MM.DD

Title

INDEX OF DRAWINGS AND STANDARD NOTES 1

Project No.	Scale
184031441	AS SHOWN
Revision	Sheet
0	2 of 128

Drawing No.

G002

STANDARD NOTE (CONT.)

EROSION AND SEDIMENTATION CONTROL NOTES

1. THE CONTRACTOR SHALL PREPARE SWPPP IN COMPLIANCE WITH BEST MANAGEMENT PRACTICE (BMP) AND IN ACCORDANCE WITH REQUIREMENTS SET FORTH IN THE CONTRACT SPECIFICATIONS. THE SWPPP INCLUDING DETAILS, NOTES, AND CALCULATIONS SHALL BE SUBMITTED TO THE ENGINEER FOR REVIEW.
2. EROSION AND SEDIMENT CONTROL MEASURES SHALL BE EFFECTIVE FOR THE DURATION OF CONTROL ACTIVITY.
3. NO STORM RUNOFF WATER SHALL BE ALLOWED TO DRAIN DIRECTLY INTO THE EXISTING UNDERGROUND STORM SYSTEM BEFORE THE ONSITE STORM DRAIN SYSTEM IS INSTALLED.
4. AS SOON IS PRACTICAL AFTER THE NEW ONSITE SYSTEM IS INSTALLED, THE CATCH BASINS SHALL BE INSTALLED AND STRAWBALES OR APPROVED SCREENS SHALL BE PLACED AROUND THE CATCH BASINS, AS SHOWN IN THE DRAWINGS OR ON CITY STANDARD DETAILS.
5. SHOULD THE PROPOSED ONSITE STORM SYSTEM NOT BE INSTALLED BY OCTOBER 15, TEMPORARY SEDIMENT BASINS SHALL BE CONSTRUCTED AROUND THE OPENING OF ANY EXISTING STORM PIPES THAT DRAIN THE SITE, PER CITY STANDARD DETAILS OR PER A SPECIAL DETAIL SHOWN ON THE PLAN.
6. THE NAME, ADDRESS AND 24-HOUR TELEPHONE NUMBER OF THE RESPONSIBLE PERSON FOR IMPLEMENTATION OF EROSION AND SEDIMENTATION CONTROL PLAN SHALL BE PROVIDED.
7. A MINIMUM OF 50 LINEAR FEET BY 12 FEET WIDTH OF DRAIN ROCK, 1-1/2" DIAMETER OR LARGER AT A MINIMUM DEPTH OF 6", SHALL BE INSTALLED AT EACH SITE INGRESS/EGRESS, UNLESS NOTED OTHERWISE ON THE DRAWINGS. THIS DOES NOT NEED BE DONE AT INGRESS/EGRESS LOCATIONS, WHICH WILL BE CLOSED BY IMMOVABLE BARRICADES DURING CONSTRUCTION.
8. ALL EROSION AND SEDIMENTATION CONTROL MEASURES SHALL BE MAINTAINED UNTIL DISTURBED AREAS ARE STABILIZED. CHANGES TO THE EROSION AND SEDIMENTATION CONTROL PLAN SHALL BE MADE TO MEET FIELD CONDITIONS, BUT ONLY WITH THE APPROVAL OF OR AT THE DIRECTION OF THE PROJECT ENGINEER.
9. DURING THE RAINY SEASON, ALL SIDEWALK AND PAVED AREAS SHALL BE KEPT CLEAR OF EARTH MATERIAL AND DEBRIS. THE SITE SHALL BE MAINTAINED SO AS TO MINIMIZE SEDIMENT LADEN RUNOFF FROM ENTERING ANY STORM DRAINAGE SYSTEM.
10. THE CONTRACTOR SHALL BE RESPONSIBLE TO INSPECT AND REPAIR ALL EROSION CONTROL FACILITIES AT THE END OF EACH WORK DAY DURING THE RAINY SEASON.
11. THE CONTRACTOR SHALL BE RESPONSIBLE TO CLEAN OUT SEDIMENT BASINS WHENEVER THE LEVEL OF SEDIMENT REACHES THE SEDIMENT CLEAN OUT LEVEL INDICATED ON THE PLANS.
12. THE CONTRACTOR SHALL BE RESPONSIBLE TO PROTECT BORROW AREAS AND/OR STOCKPILES WITH APPROPRIATE EROSION CONTROL MEASURES SATISFACTORY TO THE CITY ENGINEER.
13. THE CLEANING OF PAVED STREETS, DURING AND AT THE COMPLETION OF CONSTRUCTION, SHALL BE PERFORMED WITH MECHANICAL SWEEPERS. THE USE OF WATER TRUCKS TO "WASH DOWN" THE STREET IS PROHIBITED.

REGULATIONS AND PERMITS

1. WORKMANSHIP, MATERIALS AND METHODS OF CONSTRUCTION SHALL CONFORM TO THE MOST CURRENT EDITIONS OF THE C.B.C., U.M.C., U.P.C., N.E.C., AND N.F.P.A. AS WELL AS APPLICABLE STATE AND LOCAL CODES, TRADE ASSOCIATION STANDARDS, AND MANUFACTURER'S STANDARDS.
2. ALL WORK SHALL BE IN COMPLIANCE WITH APPLICABLE ORDINANCES AND REGULATIONS OF ANY AUTHORITY HAVING JURISDICTION. IF THE CONTRACT DOCUMENTS ARE IN VARIANCE THEREWITH, THE CONTRACTOR SHALL NOTIFY THE ENGINEER PRIOR TO PERFORMING SUCH WORK.
3. ALL MATERIALS AND INSTALLATIONS FOR BUILDINGS ACCESSIBLE TO THE PUBLIC SHALL BE IN CONFORMANCE WITH A.D.A. REQUIREMENTS.
4. CONTRACTOR SHALL COMPLY WITH ALL ENVIRONMENTAL MITIGATION AND MONITORING REQUIREMENTS IN ACCORDANCE WITH THE SUPPLEMENTARY CONDITIONS OF THE SPECIFICATIONS.
5. CONTRACTOR SHALL FULFILL ALL OF THE STORM WATER POLLUTION PREVENTION PLAN (SWPPP) REQUIREMENTS PRIOR TO COMMENCEMENT OF CONSTRUCTION.
6. THE CONTRACTOR SHALL OBTAIN THE NECESSARY ENCROACHMENT PERMITS FROM THE CITY OF SAN JUAN BAUTISTA, CITY OF HOLLISTER, COUNTY OF SAN BENITO AND CALIFORNIA DEPARTMENT OF TRANSPORTATION (CALTRANS) OR ANY OTHER AGENCIES HAVING JURISDICTION PRIOR TO COMMENCING ANY WORK. CONTRACTOR SHALL BE RESPONSIBLE FOR ALL CALTRANS ENCROACHMENT PERMITS.

CIVIL, PIPELINES AND OTHER UTILITIES

1. GRADING SHALL INCLUDE ALL LABOR, MATERIALS AND EQUIPMENT NECESSARY TO CONSTRUCT GRADES AS SHOWN ON THE GRADING PLAN. NO ADDITIONAL COMPENSATION WILL BE ALLOWED FOR THE DISPOSAL OF EXCESS EXCAVATION PLACED AT THE DIRECTION OF THE PROJECT ENGINEER IN ADVANCE OF ANY CHANGES DEEMED NECESSARY TO OBTAIN A BALANCED GRADING PROGRAM TO MEET MINIMUM STANDARDS. MINIMUM COMPACTION OUTSIDE THE STREET RIGHT-OF-WAY SHALL BE 90%.
2. ALL GRADING SHALL BE COMPLETED IN ACCORDANCE WITH THE RECOMMENDATIONS OF THE GEOTECHNICAL SOILS REPORT.
3. THE TYPE, SIZE, LOCATION AND DEPTH OF EXISTING UNDERGROUND UTILITIES SHOWN ON THESE DRAWINGS WERE OBTAINED FROM SOURCES OF VARYING RELIABILITY. NO RESPONSIBILITY FOR THE COMPLETENESS AND/OR ACCURACY OF THE DELINEATION OF SUCH UNDERGROUND UTILITIES, WHICH MAY BE ENCOUNTERED, IS ASSUMED BY THE ENGINEER OR OWNER. IT SHALL BE THE RESPONSIBILITY OF THE CONTRACTOR TO VERIFY THE EXISTENCE AND LOCATION OF ALL UNDERGROUND UTILITIES PRIOR TO COMMENCEMENT OF CONSTRUCTION. CONTRACTOR SHALL POTHOLE OR OTHERWISE CONFIRM THE LOCATION AND ELEVATION OF UTILITIES A MINIMUM OF 100 FEET IN ADVANCE OF PIPELINE CONSTRUCTION PROGRESS AND PROVIDE SAID UTILITY INFORMATION TO THE ENGINEER. THIS IS TO ALLOW FOR PROFILE ADJUSTMENTS IN ADVANCE.
4. THE COST FOR POTHOLING TO LOCATE EXISTING UNDERGROUND UTILITIES SHOWN ON THE DRAWINGS SHALL BE INCLUDED IN THE CONTRACTOR'S BID.
5. LOCATION OF PIPELINES SHOWN ON THE DRAWINGS ARE APPROXIMATE. CONTRACTOR IS RESPONSIBLE FOR PROVIDING PIPE FITTINGS (WHETHER OR NOT SHOWN ON THE DRAWINGS) TO PLACE THE ALIGNMENT OF THE PIPELINES AS CLOSE AS PRACTICABLE TO THAT SHOWN ON THE DRAWINGS.
6. PROVIDE 12 INCHES MINIMUM VERTICAL CLEARANCE BETWEEN PIPELINE AND EXISTING UTILITIES, UNLESS NOTED OTHERWISE.
7. PIPELINES SHALL SLOPE UNIFORMLY BETWEEN ELEVATIONS SHOWN ON PLANS AND PROFILE. ALL PIPE ELEVATIONS SHOWN REFER TO INVERT UNLESS NOTED OTHERWISE.
8. ALL PIPELINES SHALL HAVE A MINIMUM COVER OF 36 INCHES, UNLESS NOTED OTHERWISE.
9. GROUND PROFILE IS SHOWN ALONG CENTERLINE UNLESS OTHERWISE NOTED.
10. DEFLECT JOINTS ON STANDARD FITTINGS OR ADJACENT PIPE JOINTS TO OBTAIN VERTICAL OR HORIZONTAL CURVES SHOWN ON THE DRAWINGS, NOT TO EXCEED 1/3 OF MANUFACTURER'S RECOMMENDED MAXIMUM DEFLECTION.
11. UNDERGROUND FACILITIES SHALL BE INSTALLED PRIOR TO INSTALLATION OF CURB, GUTTER AND SIDEWALK.
12. CASTINGS COLLARS FOR UNDERGROUND UTILITIES SHALL BE ADJUSTED TO 3/8 INCH BELOW FINISH GRADE BY THE UNDERGROUND CONTRACTOR (AFTER COMPLETION OF PAVING).
13. LINE VALVES SHALL BE SHOP TESTED TO SEAT IN BOTH DIRECTIONS TO FACILITATE FIELD PRESSURE TESTING.
14. ALL CONCRETE VAULTS AND COVERS IN TRAFFIC AREAS SHALL BE DESIGNED FOR H-20 TRAFFIC LOADINGS.
15. THRUST BLOCKS ARE NOT ALLOWED FOR PIPE AND FITTING RESTRAINT, UNLESS NOTED OTHERWISE. FITTINGS AND PIPE JOINTS SHALL BE RESTRAINED IN ACCORDANCE WITH THE SPECIFICATIONS AND AS SHOWN ON THE DRAWINGS.
16. CONTRACTOR SHALL BE RESPONSIBLE FOR DAMAGE DUE TO DUST OR EROSION RESULTING FROM THE WORK DONE BY THE CONTRACTOR.
17. IF SAW CUT IS WITHIN 2 FEET OF AN EXISTING PAVEMENT EDGE OR EXISTING PAVEMENT PATCH, REMOVE EXISTING PAVEMENT TO THAT EDGE AND REPLACE THE ENTIRE PAVEMENT.
18. ALL PIPE PENETRATIONS THROUGH WALLS AND SLABS SHALL BE PROVIDED WITH SLEEVES IN ACCORDANCE WITH THE TYPICAL DETAIL "M305", UNLESS NOTED OTHERWISE.
19. CONTRACTOR SHALL KEEP EXCAVATIONS FREE FROM WATER DURING CONSTRUCTION. STATIC WATER LEVEL SHALL BE DRAWN DOWN A MINIMUM OF 3 FEET BELOW BOTTOM OF EXCAVATIONS. DISPOSAL OF WATER SHALL NOT DAMAGE PROPERTY OR CREATE A PUBLIC NUISANCE.
20. THE CONTRACTOR SHALL MAINTAIN ALL EXISTING DRAINAGE FACILITIES AND PROVIDE NECESSARY EROSION CONTROL MEASURES WITHIN THE CONSTRUCTION AREA UNTIL THE DRAINAGE IMPROVEMENTS ARE IN PLACE AND FUNCTIONING. THE CONTRACTOR SHALL PROVIDE AN EROSION CONTROL PLAN TO THE ENGINEER FOR REVIEW.
21. CONTRACTOR SHALL CONTACT U.S.A. TO MARK ALL EXISTING UTILITIES.

STRUCTURAL
SEE STRUCTURAL DRAWINGS FOR GENERAL NOTES ON CONCRETE CONSTRUCTION.

ELECTRICAL
SEE ELECTRICAL DRAWINGS FOR GENERAL NOTES ON ELECTRICAL AND INSTRUMENTATION CONSTRUCTION.

MECHANICAL EQUIPMENT AND PIPING

1. PROVIDE ALL APPURTENANCES REQUIRED FOR PROPER OPERATION OF EQUIPMENT, IN ACCORDANCE WITH THE SPECIFICATIONS, WHETHER OR NOT THEY ARE SHOWN ON THE DRAWINGS.
2. PIPING CONNECTIONS TO EQUIPMENT SHALL BE VERIFIED AND ADJUSTED TO MATCH ACTUAL EQUIPMENT FURNISHED AT NO ADDITIONAL COST TO OWNER.
3. SUCTION AND DISCHARGE PIPING FOR PUMPS, BLOWERS, ETC. SHALL BE SUPPORTED SO THAT THE WEIGHT OF THE PIPING IS NOT DISTRIBUTED TO THE EQUIPMENT.
4. THE MOST STRINGENT REQUIREMENTS FOR EQUIPMENT SHALL GOVERN IN THE CASE OF A CONFLICT BETWEEN DRAWINGS AND SPECIFICATIONS.
5. PROVIDE WARNING SIGNS IN ACCORDANCE WITH THE SPECIFICATIONS FOR ALL REMOTELY CONTROLLED EQUIPMENT.
6. NOT ALL PIPE SUPPORTS ARE SHOWN ON THE DRAWINGS. FURNISH AND INSTALL SUPPORTS IN ACCORDANCE WITH THE SPECIFICATIONS AND TYPICAL DETAILS, AT NO ADDITIONAL COST TO THE OWNER.
7. NOT ALL PIPE FITTINGS ARE SHOWN ON THE DRAWINGS. FURNISH AND INSTALL ALL FITTINGS, AS REQUIRED FOR THE EQUIPMENT FURNISHED, AT NO ADDITIONAL COST TO THE OWNER.
8. EQUIPMENT LAYOUT SHOWN ON THE DRAWINGS IS FOR ONE MANUFACTURER. CONTRACTOR SHALL MAKE ALL NECESSARY STRUCTURAL, MECHANICAL, AND BUILDING MODIFICATIONS NECESSARY TO ACCOMMODATE ALTERNATIVE EQUIPMENT AT NO ADDITIONAL COST TO THE OWNER.
9. ALL PRESSURE PIPES, FITTINGS, AND VALVES SHALL BE RESTRAINED.

MATERIALS AND PRODUCTS

1. ALL PRODUCTS AND MATERIALS SHALL BE INSTALLED IN ACCORDANCE WITH THE MANUFACTURER'S INSTRUCTIONS, UNLESS NOTED OTHERWISE.
2. ALL MATERIALS AND EQUIPMENT FURNISHED SHALL BE NEW AND FREE FROM DEFECTS. MATERIALS USED MUST HAVE THE MANUFACTURER'S WARRANTED SUPPORT.
3. MATERIALS, EQUIPMENT, ETC., NOT INDICATED ON THE DRAWINGS OR SPECIFIED, WHICH ARE MANIFESTLY OR REASONABLY REQUIRED, OR NECESSARY FOR A SUCCESSFUL, EFFICIENT AND COMPLETE INSTALLATION, SHALL NOT RELIEVE THE CONTRACTOR FROM PERFORMING SUCH WORK. THEY SHALL BE HELD TO BE IMPLIED, AND SHALL BE FURNISHED AND INSTALLED AT NO ADDITIONAL COST TO THE OWNER.
4. WHERE REFERENCE IS MADE TO VARIOUS TEST STANDARDS FOR MATERIALS, SUCH STANDARDS SHALL BE THE LATEST EDITION AND/OR ADDENDUM.
5. ALL BUILDING COMPONENTS, BUILDING SYSTEMS AND BUILDING PRODUCTS ARE TO BE LOCATED, FURNISHED, PROVIDED, AND INSTALLED WITH NECESSARY ACCESSORIES INCLUDING BUT NOT LIMITED TO EXPANSION/CONTRACTION CONTROL, BRACING, FLASHING, ELECTRONIC DEVICES, VALVES, ACCESSORIES, SUPPORTS, CONNECTIONS, DRAINAGE, VENTILATION, ETC., FOR A COMPLETE AND WORKING ASSEMBLY, PER CODES, DRAWINGS AND SPECIFICATIONS, AND PER THE RECOMMENDATIONS OF ALL MANUFACTURERS, INCLUDING THOSE DIRECTLY INVOLVED AND THOSE RELATED OR INTERFACING.
6. CONTRACTOR SHALL VERIFY ALL CONTROLLING DIMENSIONS PRIOR TO PREPARATION OF SHOP DRAWINGS AND ORDERING OF MATERIALS.
7. CONTRACTOR SHALL BE REQUIRED TO ARRANGE FOR ALL STORAGE/STAGING AREAS AS SHOWN ON THE DRAWINGS, AND PROVIDE SECURITY AT NO ADDITIONAL COST TO THE OWNER.
8. ALL STAINLESS STEEL SHALL BE TYPE 304 OR 316, UNLESS NOTED OTHERWISE.
9. ALL NUTS AND BOLTS TO BE INSTALLED UNDERGROUND SHALL BE STAINLESS STEEL TYPE 316, UNLESS NOTED OTHERWISE.
10. ISOLATE ALL COPPER PIPE FROM OTHER MATERIALS WITH PVC TAPE.
11. SEPARATE DISSIMILAR METALS AND ALUMINUM IN CONTACT WITH CONCRETE, WITH BITUMINOUS PAINT OR AN ALTERNATIVE PRODUCT APPROVED BY THE ENGINEER.

WORKMANSHIP

1. CONTRACTOR DAMAGED WORK MUST BE REPLACED AT NO ADDITIONAL COST TO THE OWNER. REPAIR OF CONSTRUCTION DAMAGE TO EXISTING FACILITIES AND UTILITIES IS THE CONTRACTOR'S RESPONSIBILITY.
2. THE ENGINEER RESERVES THE RIGHT TO DIRECT THE CONTRACTOR TO REMOVE AND REINSTALL WORK, WHICH IN THE ENGINEER'S OPINION DOES NOT MAINTAIN WORKMANSHIP AND CRAFTSMANSHIP STANDARDS.
3. THE CONTRACTOR SHALL PROVIDE ALL MEASURES NECESSARY TO PROTECT BUILDINGS AND STRUCTURES DURING CONSTRUCTION. SUCH MEASURES SHALL INCLUDE, BUT ARE NOT LIMITED TO, BRACING AND SHORING. OBSERVATION VISITS TO THE SITE BY THE DESIGN ENGINEER SHALL NOT INCLUDE INSPECTION OF THE ABOVE ITEMS.
4. CONSTRUCTION MATERIAL SHALL BE SPREAD OUT IF PLACED ON FRAMING FLOORS OR ROOF. LOAD SHALL NOT EXCEED THE DESIGN LIVE LOAD PER SQUARE FOOT.
5. CONTRACTOR SHALL MAINTAIN THE JOB SITE IN CLEAN, SAFE AND USABLE CONDITION THROUGHOUT THE COURSE OF CONSTRUCTION. ALL SPILLS OF SOIL, ROCK, CONSTRUCTION DEBRIS, ETC., SHALL BE REMOVED IMMEDIATELY FROM PUBLIC ACCESS AREAS. ALL TRASH, CONSTRUCTION DEBRIS AND MATERIALS SHALL BE CONTAINED WITHIN THE CONSTRUCTION AREA UNTIL OFF-SITE DISPOSAL CAN BE ARRANGED.

Revision	By	Appd.	YY.MM.DD

Issued	By	Appd	YYYY.MM.DD
PERMIT SET	KM	GIA	2022.10.10

Permit/Seal

REGISTERED PROFESSIONAL ENGINEER — GABRIEL T. ARONOW — No. 55607 — Exp.12/31/22 — CIVIL — STATE OF CALIFORNIA

09/01/2022

Consultant

Stantec

Stantec Consulting Services Inc.
3875 Atherton Road
Rocklin CA 95765-3716
Tel:(916) 773-8100
www.stantec.com

Copyright Reserved

The Contractor shall verify and be responsible for all dimensions. DO NOT scale the drawing - any errors or omissions shall be reported to Stantec without delay.
The Copyrights to all designs and drawings are the property of Stantec. Reproduction or use for any purpose other than that authorized by Stantec is forbidden.

Client/Project Logo

Client/Project

City of San Juan Bautista

SANITARY SEWER FORCE MAIN TO HOLLISTER PROJECT

San Juan Bautista, California

File Name: 31441-G002 & G003	ASB	KM	GIA	2022.10.10
	Dwn.	Dsgn.	Chkd.	YYYY.MM.DD

Title

STANDARD NOTES 2

Project No.	Scale
184031441	AS SHOWN

Revision	Sheet	Drawing No.
0	3 of 128	G003

v:\1845\active\184031441\drawing\sct\31441-g002 & g003 2022.10.10 1:57:55 PM
ORIGINAL SHEET - ANSI D

SYMBOLS

- SECTION IDENTIFICATION LETTER
- SHEET OR DRAWING NUMBER WHERE SECTION APPEARS
- SECTION IDENTIFICATION LETTER
- SHEET OR DRAWING NUMBER WHERE SECTION IS TAKEN
- DETAIL IDENTIFICATION NUMBER
- SHEET OR DRAWING NUMBER WHERE DETAIL IS TAKEN OR APPEARS
- FME 30021 — EXISITNG EQUIPMENT TAG
- MTR 12011 — NEW EQUIPMENT TAG
- MOV 17115 — EXISTING VALVE TAG
- SLG 17013 — NEW VALVE TAG
- NEW FACILITIES
- EXISTING FACILITIES
- FUTURE FACILITIES
- NEW FENCE
- EXISTING FENCE
- NEW CONTOUR
- EXISTING CONTOUR
- NEW EMBANKMENT
- EXISTING PIPE OR STRUCTURE TO BE ABANDONED OR REMOVED
- NEW SPOT ELEVATION
- EXISTING SPOT ELEVATION
- TREE & TRUNK DIAMETER
- TREE TO BE REMOVED
- NEW MANHOLE & PIPELINE
- EXISTING MANHOLE & PIPELINE
- FUTURE MANHOLE & PIPELINE
- NEW POWER POLE
- EXISTING POWER POLE
- EXISTING UNDERGROUND SERVICE (TYPE NOTED)
- PROPERTY LINE
- CONCRETE LINED DITCH
- CONCRETE CURB & GUTTER
- DRAINAGE SWALE
- CONCRETE V-GUTTER
- COBBLE LINED CHANNEL

PIPING SYMBOLS

- AIR RELEASE VALVE / AIR & VACUUM VALVE / COMBINATION AIR VALVE
- KNIFE GATE VALVE
- GATE VALVE
- CHECK VALVE
- CATHODIC PROTECTION TEST STATION
- SPLIT DISK CHECK VALVE
- SOLENOID VALVE
- MOTOR OPERATED VALVE
- PRESSURE REDUCING VALVE
- BACK-FLOW PREVENTER
- DIAPHRAGM/PINCH VALVE
- PRESSURE RELIEF VALVE
- PRESSURE GAUGE OR SWITCH
- PRESSURE RELIEF VALVE PLASTIC
- ROTARY LOBE PUMP
- THERMOMETER
- MIXER
- ULTRA SONIC LEVEL SENSOR
- PLUG VALVE
- PLUG VALVE
- BALL VALVE
- GLOBE VALVE
- ANGLE VALVE
- BUTTERFLY VALVE
- NEEDLE VALVE
- UNION
- REDUCER
- STRAINER
- CLEANOUT
- HOSE VALVE
- 3W FIRE HYDRANT
- 1W FIRE HYDRANT
- POST INDICATOR VALVE (PIV)
- FIRE DEPARTMENT CONNECTION (FDC)
- SEWAGE ARV
- ACCESS DOOR
- PROGRESSIVE CAVITY PUMP
- MECHANICAL JOINT OR BELL & SPIGOT FITTING
- FLANGE X MJ ADAPTOR
- FLANGED FITTING
- GROOVED COUPLING
- FLANGED COUPLING ADAPTER
- WALL SLEEVE
- FLEXIBLE COUPLING
- BELL RING PENETRATION

GATE & VALVE ABBREVIATIONS

ARV	AIR RELEASE VALVE
ASV	ANGLE STOP VALVE
AVV	AIR & VACUUM VALVE
BCV	BALL CHECK VALVE
BFV	BUTTERFLY VALVE
BV	BALL VALVE
CAV	COMBINATION AIR VALVE
CP	CATHODIC PROTECTION
CT	CATHODIC TEST STATION
CV	CHECK VALVE, CONTROL VALVE
DCDA	DOUBLE CHECK DETECTOR ASSEMBLY
DV	DIAPHRAGM VALVE
FCV	FLEXIBLE CHECK VALVE
FDC	FIRE DEPARTMENT CONNECTION
FG	FLAP GATE
FH	FIRE HYDRANT
FSCV	FLEXIBLE SWING CHECK VALVE
GLV	GLOBE VALVE
GTV	GATE VALVE
GTV & B	GATE VALVE & BOX
HGV	HOSE GATE VALVE
HOG	HYDRAULICALLY OPERATED GATE
HV	HOSE VALVE
KG	KNIFE GATE
LV	LINE VALVE
MBV	MOTORIZED BALL VALVE
MOG	MOTORIZED OPERATED GATE
MV	MUD VALVE
MWR	MOTORIZED WEIR
NV	NEEDLE VALVE
PARV	PLASTIC AIR RELEASE VALVE
PBV	PLASTIC BALL VALVE
PCHV	PINCH VALVE
PCV	PLASTIC CHECK VALVE
PH	POST HYDRANT
PIV	POST INDICATOR VALVE
PRFV	PRESSURE RELIEF VALVE PLASTIC
PRV	PRESSURE REGULATING (REDUCING) VALVE
PRVP	PRESSURE RELIEF VALVE PLASTIC
PV	PLUG VALVE
RV	RELIEF VALVE
SARV	SEWAGE AIR RELEASE VALVE
SAVV	SEWAGE AIR VACUUM VALVE
SCAV	SEWAGE COMBINATION AIR VALVE
SCV	SPLIT DISC CHECK VALVE
SSG	SLUICE GATE
SLG	SLIDE GATE
SOLV	SOLENOID VALVE
STP	STOP PLATE
TV	THERMOSTATIC VALVE
VB	VACCUM BREAKER

PIPE TYPE ABBREVIATIONS

ABS	ACRYLONITRILE-BUTADIENE-STYRENE
ACP	ASBESTOS CEMENT PIPE
BSP	BLACK STEEL PIPE
CCP	CONCRETE CYLINDER PIPE
CCSP	CEMENT MORTAR LINED & COATED STEEL PIPE
CIP	CAST IRON PIPE
CISP	CAST IRON SOIL PIPE
CMP	CORRUGATED METAL PIPE
CPVC	CHLORINATED POLYVINYL CHLORIDE PIPE
CU	COPPER PIPE
DIP	DUCTILE IRON PIPE
DUP	DURIRON PIPE
ELCS	EPOXY LINED & COATED STEEL PIPE
FRP	FIBERGLASS REINFORCED PIPE
GLCIP	GLASS LINED CAST IRON PIPE
GSP	GALVANIZED STEEL PIPE
PCMP	PERFORATED CORRUGATED METAL PIPE
PLAC	PLASTIC LINED ASBESTOS CEMENT PIPE
PRCCP	PRESTRESSED CONCRETE CYLINDER PIPE
PT	PLASTIC TUBING
PVC	POLYVINYL CHLORIDE PIPE
PVC-UVR	POLYVINYL CHLORIDE PIPE - ULTRAVIOLET RESISTANT
RCP	REINFORCED CONCRETE PIPE
SLS	SARAN LINED STEEL PIPE
SST	STAINLESS STEEL PIPE
WSP	WELDED STEEL PIPE

PIPING SYSTEM ABBREVIATIONS

AA	AERATION AIR
ACD	ACID
ALC	ALUM / CATIONIC POLYMER
ALM	ALUM
BRV	BRAIDED VINYL
BWS	BACKWASH SUPPLY
C	CONDUIT (CHEMICAL SERVICE)
CIP	CLEAN IN PLACE
CNT	CENTRATE
D	DRAIN
DAFS	DAF SLUDGE
DAFI	DAF INFLUENT
DAFR	DAF RECYCLE
DAFF	DAF FLOAT
DAFE	DAF EFFLUENT
DWS	DEWATERED SLUDGE
EPS	EMULSION POLYMER SOLUTION
EPSH	EPS HOGH PRESSURE
EXH	EXHAUST
FA	FOUL AIR
FE	FINAL EFFLUENT
FEF	FILTER EFFLUENT
FIF	FILTER INFLUENT
FOR	FUEL OIL RETURN
FOS	FUEL OIL SUPPLY
GD	GROUND DRAIN
GRT	GRIT
HPA	HIGH PRESSURE AIR
HW	HOT WATER
IA	INSTRUMENT AIR
LMS	LIME SLURRY
ME	MEMBRANE EFFLUENT
ML	MIXED LIQUOR
MPE	MATURATION POND EFFLUENT
NEP	NEAT EMULSION POLYMER
ODI	OXIDATION DITCH INFLUENT
OF	OVERFLOW
PD	PUMPED DRAIN
PDW	PROCESS DEWATERING
PLA	ANIONIC POLYMER SOLUTION
PLC	CATIONIC POLYMER SOLUTION
PLE	EMILSION POLYMER SOLUTION
PR	POND RETURN
RAS	RECYCLE ACTIVATED SLUDGE
RASS	RAS SAMPLE
RS	RAW SEWAGE
RW OF	RECYCLED WATER OVER FLOW
SA	SERVICE AIR
SBCWD	SAN BENITO COUNTY WATER DISTRICT
SD	STORM DRAIN
SE	SECONDARY EFFLUENT
SHC	SODUIM HYPOCHLORITE SOLUTION
SHX	SODUIM HYDROXIDE SOLUTION
SMP	SAMPLE
SRS	SCREENED RAW SEWAGE
SS	SANITARY SEWER
SSC	SECONDARY SCUM
SSFM	SANITARY SEWER FORCE MAIN
STD	STORM DRAIN
TW	TREATED WATER
UVE	UV DISINFECTION EFFLUENT
V	VENT
WAS	WASTE ACTIVATED SLUDGE
1W	POTABLE WATER
2W	NON-POTABLE WATER
3W	RECLAIMED WATER

DRAWING NUMBERING SYSTEM

THE DRAWINGS ARE SUBDIVIDED INTO BROAD TRADE SECTIONS AND HAVE THE FOLLOWING PREFIXES TO THEIR NUMBERS ACCORDING TO CATEGORY AND ARE BOUND IN THE FOLLOWING ORDER.

G	GENERAL
C	CIVIL
D	DEMOLITION
CP	CATHODIC PROTECTION
S	STRUCTURAL
M	MECHANICAL
E	ELECTRICAL
I	INSTRUMENTATION

THE DRAWINGS WITHIN THIS SET ARE NUMBERED PER THE FOLLOWING EXAMPLE:

M 3 2 1
- 1 — DRAWING NUMERICAL SEQUENCE
- 2 — SUB AREA
- 3 — MAJOR AREA
- M — TRADE

PIPING IDENTIFICATION SYSTEM

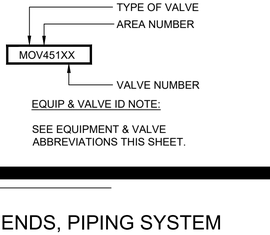

PIPING IDENTIFICATION SYSTEM NOTE:

SEE PIPING ABBREVIATIONS THIS SHEET.
SEE SPECIFICATION FOR PIPE MATERIAL NOT SPECIFICALLY CALLED OUT ON THE DRAWINGS.

CHEMICAL CONDUIT IDENTIFICATION SYSTEM

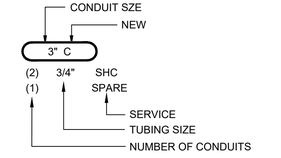

CHEMICAL CONDUIT NOTE:

ONLY ONE (1) LINE OF CHEMICAL TUBING PER CONDUIT.

VALVE & EQUIPMENT IDENTIFICATION SYSTEM

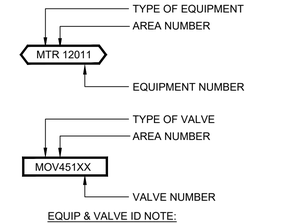

EQUIP & VALVE ID NOTE:

SEE EQUIPMENT & VALVE ABBREVIATIONS THIS SHEET.

HATCHING LEGEND

- EXISTING AC PAVING (PLAN)
- NEW LIGHT DUTY AC PAVING (PLAN)
- NEW LIGHT DUTY AGGREGATE BASE (PLAN)
- NEW HEAVY DUTY AC PAVING (PLAN)
- NEW HEAVY DUTY AGG BASE (PLAN)
- EXISTING AC PAVING (SECTION)
- NEW AC PAVING (SECTION)
- NEW AGGREGATE BASE (SECTION)
- EXISTING GRADE & FILL (SECTION)
- ROCK SLOPE PROTECTION (PLAN & SECTION)
- EXISTING CONCRETE (PAN & SECTION)
- NEW CONCRETE (PLAN & SECTION)
- GRATING (TYPE A)
- GRATING (TYPE B)
- ENVIRONMENTALLY SENSITIVE AREA (ESA)

ORIGINAL SHEET - ANSI D

Revision	By	Appd.	YY.MM.DD

PERMIT SET — KM — GIA — 2022.10.10
Issued — By — Appd — YYYY.MM.DD

Permit/Seal

REGISTERED PROFESSIONAL ENGINEER — GABRIEL I. ARONOW — No. 55607 — Exp.12/31/22 — CIVIL — STATE OF CALIFORNIA

09/01/2022

Consultant

Stantec

Stantec Consulting Services Inc.
3875 Atherton Road
Rocklin CA 95765-3716
Tel: (916) 773-8100
www.stantec.com

Copyright Reserved

The Contractor shall verify and be responsible for all dimensions. DO NOT scale the drawing - any errors or omissions shall be reported to Stantec without delay.
The Copyrights to all designs and drawings are the property of Stantec. Reproduction or use for any purpose other than that authorized by Stantec is forbidden.

Client/Project Logo

Client/Project

City of San Juan Bautista

SANITARY SEWER FORCE MAIN TO HOLLISTER PROJECT

San Juan Bautista, California

File Name: 31441-G004 — ASB Dwn. — KM Dsgn. — GIA Chkd. — 2022.10.10 YYYY.MM.DD

Title

LEGENDS, PIPING SYSTEM SYMBOLS AND ABBREVIATIONS

Project No. 184031441 — Scale AS SHOWN

Revision 0 — Sheet 4 of 128 — Drawing No. G004

\\<\MKP\cd\ref\184031441\drawing\dcn\31441-g004 2022.10.10 1:59:22 PM

AB	ANCHOR BOLT, AGGREGATE BASE, ANOXIC BASIN
ABND	ABANDONED
ABS	ACRILONTRILE-BUTADIENE-STYRENE
AC	ASPHALT CONCRETE, ACRE
ACP	ASBESTOS CEMENT PIPE
ACST	ACOUSTIC
ADD	ADDENDUM, ADDITION(AL)
ADJ	ADJUSTABLE
ADPTR	ADAPTER
ADW	AVERAGE DRY WEATHER
AGG	AGGREGATE
AHR	ANCHOR
A/C	AIR CONDITIONER
A/D	ADD/DEDUCT
AL	ALUMINUM
ALTN	ALTERNATE
ALUM	ALUMINUM SULFATE
AMB	AMBIENT
AMP	AMPERES
APPROX	APPROXIMATE(LY)
ARCH	ARCHITECTURAL
ARV	AIR RELEASE VALVE
ASV	AIR STOP VALVE
AT	ALUMINUM THRESHOLD
ATM	ATMOSPHERE
ATS	ANODE TEST STATION
AUTO	AUTOMATIC
AUX	AUXILIARY
AVG	AVERAGE
AVV	AIR VACUUM VALVE
BC	BEGINNING OF CURVE
BD	BAR DIAMETER
BF	BLIND FLANGE
BFP	BACK FLOW PREVENTER
BLDG	BUILDING
BLK	BLOCK
BLKG	BLOCKING
BM	BEAM, BENCHMARK
BO	BLOW-OFF
BOD	BIOCHEMICAL OXYGEN DEMAND
BOT	BOTTOM
BRKR	BREAKER
BRKT	BRACKET
BRV	BRAIDED VINYL
BRZ	BRONZE
BSP	BLACK STEEL PIPE
BTU	BRITISH THERMAL UNIT
BU	BUILT-UP
BUV	BUTTERFLY VALVE
BV	BALL VALVE
BW	BARBED WIRE
CAP	CAPACITY
CAV	COMBINATION AIR VALVE
CB	CATCH BASIN
CC	CENTER TO CENTER
CCP	CONCRETE CYLINDER PIPE
CCSP	CEMENT LINED AND COATED STEEL PIPE
CD	CEILING DIFFUSER
CEM	CEMENT
CF	CUBIC FOOT
CFH	CUBIC FOOT PER HOUR
CFM	CUBIC FOOT PER MINUTE
CFS	CUBIC FOOT PER SECOND
C&G	CURB AND GUTTER
CHEM	CHEMICAL
CHKR	CHECKER
CIDM	CAST-IN-DRILLED HOLE
CIP	CAST IRON PIPE
CISP	CAST IRON SOIL PIPE
CJ	CONSTRUCTION JOINT
CKT	CIRCUIT
CL	CLEARANCE, CENTER LINE
CL2	CHLORINE
CLAR	CLARIFIER
CLG	CEILING
CMP	CORRUGATED METAL PIPE
CMPD GA	COMPOUND GAUGE
CLR	CLEAR
CMU	CONCRETE MASONRY UNIT
CMPA	CORRUGATED METAL PIPE ARCHED
CNCTRC	CONCENTRIC
CND	CONDUIT
CNDCT	CONDUCTOR
CNDS	CONDENSATE
CO2	CARBON DIOXIDE
CO	CLEANOUT
COTG	CLEANOUT TO GRADE
COD	CHEMICAL OXYGEN DEMAND
COL	COLUMN
COLL	COLLECTOR
COMPT	COMPARTMENT
CONC	CONCRETE
CONN	CONNECTION
CONST	CONSTRUCTION
CONT	CONTINUATION(OUS), CONTINUED
CP	CATHODIC PROTECTION
CPI	CONTROL POWER INTERLOCK
CPLG	COUPLING
CPT	CONTROL POWER TRANSFORMER
CPVC	CHLORINATED POLYVINYL CHLORIDE PIPE
CREJ	CORRUGATED RUBBER EXPANSION JOINT
CT	CURRENT TRANSFORMER, CATHODIC TEST STATION
CTR	CENTER
CTS	CATHODIC TEST STATION
CTSK	COUNTERSUNK
CU	CONTROL UNIT, COPPER PIPE
CV	CHECK VALVE, CONTROL VALVE
CW	COLD WATER
CYL	CYLINDER

DAF	DISSLOVED AIR FLOTATION
DBL	DOUBLE
DEG	DEGREE
DENS MTR	DENSITY METER
DET	DETAIL
DF	DOUGLAS FIR
DI	DROP INLET
DIA	DIAMETER
DIAG	DIAGRAM
DIAPH V	DIAPHRAGM VALVE
DIFF	DIFFERENTIAL
DIP	DUCTILE IRON PIPE
DIS	DISCHARGE
DISCH	DISCHARGE
DIZ	DIONIZED WATER
DMPR MOT	DAMPER MOTOR
DN	DOWN
DO	DISSOLVED OXYGEN
DP	DEDUCT POINT
DR	DRAIN
DS	DIGESTED SLUDGE, DOWNSPOUT
DT	DRIP TRAP
DUP	DUPLICATE
DV	DIAPHRAGM VALVE
DW	DISHWASHER
DWG	DRAWING
EA	EACH
EB	EXPANSION BOLT
EC	END OF CURVE
ECC	ECCENTRIC
EE	EACH END
EF	EACH FACE
EFL	EFFLUENT
EL	ELEVATION
ELB	ELBOW
ELCS	EPOXY LINED AND COATED STEEL PIPE
ELECT	ELECTRIC(AL)
EMER	EMERGENCY
EP	EDGE OF PAVEMENT
EPS	EFFLUENT PUMP STATION
EQ	EQUAL
EQUIP	EQUIPMENT
ESA	ENVIRONMENTALLY SENSITIVE AREA
ESB	EMERGENCY STORAGE BASIN
EW	EACH WAY
EWC	ELECTRIC WATER COOLER
EX	EXTRA
EXH	EXHAUST
EXH FN	EXHAUST FAN
EXP	EXPOSED, EXPANSION
EXP JT	EXPANSION JOINT
EXIST (E)	EXISTING
EXT	EXTERIOR
FA	FRESH AIR
FAB	FABRICATE(D)(TION)
FAI	FRESH AIR INTAKE
FB	FLAT BAR, FLOOR BEAM, FACE OF BLOCK
FC	FLEXIBLE COUPLING
FCA	FLANGED COUPLING ADAPTER
FCO	FLOOR CLEANOUT
FCR	FINE CRUSHED ROCK
FD	FLOOR DRAIN
FDR	FEEDER
FE	METER(ELEMENT)
FES	FLARED END SECTION
FF	FILTER FEED, FINISHED FLOOR
F/G	FIBERGLASS
FG	FLAP GATE, FINISH GRADE
FH	FIRE HYDRANT
FIN	FINISH(ED)
FL	FLOOR, FLOW LINE
FLEX	FLEXIBLE
FLG	FLANGE(D)
FL CO	FLOOR CLEANOUT
FLH	FLAT HEAD
FLW	FLAT WASHER
FM	FORCE MAIN
FPM	FEET PER MINUTE
FPS	FEET PER SECOND
FRC	FLEXIBLE RUBBER COUPLING
FRP	FIBERGLASS REINFORCED PLASTIC
FS	FAR SIDE
FST	FASTENER (S)
FT	FEET, FOOT
FTG	FOOTING
FUT	FUTURE
G	GAS
G&P	GRADING AND PAVING
GA	GAUGE
GAF	GALVANIZE AFTER FABRICATION
GAL	GALLON
GALV	GALVANIZED
GC	GROOVED COUPLING
GD	GROUNDWATER DRAIN
GENL	GENERAL
GL	GLASS
GLCIP	GLASS LINED CAST IRON PIPE
GLV	GLOBE VALVE
GND	GROUND
GPD	GALLONS PER DAY
GPH	GALLONS PER HOUR
GPM	GALLONS PER MINUTE
GR	GRADE
GRDR	GRINDER
GS	GALVANIZED STEEL
GSB/S	GALVANIZED STEEL BOLT/EXP SHIELD
GSKT	GASKET
GSP	GALVANIZED STEEL PIPE
GTV	GATE VALVE
GTV & B	GATE VALVE AND VALVE BOX
GWB	GYPSUM WALL BOARD

H	HEIGHT
H/A	HAND-AUTOMATIC
HC	HOLLOW CORE
HD	HEAVY DUTY
HDOT	HEAVY DUTY OIL TIGHT
HDR	HEADER
HDWD	HARDWOOD
HEX	HEXAGONAL
HGLV	HOSE GLOBE VALVE
HGR	HANGER
HGV	HOSE GATE VALVE
HHWL	HIGH HIGH WATER LEVEL
HM	HOLLOW METAL
HN	HEX NUT
HNDRL	HANDRAIL
HOA	HAND-OFF-AUTOMATIC
HORIZ	HORIZONTAL
HP	HORSEPOWER, HIGH PRESSURE
HR(S)	HOUR(S)
HS	HIGH STRENGTH, HEAVY STEEL
HSB	HIGH STRENGTH BOLT
HTR	HEATER
HV	HOSE VALVE, HOSE BIBB
H/V	HEATING AND VENTILATING
HWL	HIGH WATER LEVEL
HYD	HYDRAULIC
HZ	HERTZ(CYCLES PER SECOND)
ID	INSIDE DIAMETER
IE	INVERT ELEVATION
IF	INSIDE FACE
IJTS	INSULATED JOINT TEST STATION
IN	INCH
IND LP	INDICATING LAMP
INFL	INFLUENT
INST	INSTANTANEOUS
INSUL	INSULATED(ION)
INTLK	INTERLOCK
INTR	INTERIOR
INVT	INVERT
IP	IRON PIN
IPS	INFLUENT PUMP STATION
IT	INSTRUMENT TAP
J	JOIST
JB	JUNCTION BOX
JCT	JUNCTION
J HGR	JOIST HANGER
JT	JOINT
KG	KNIFE GATE
KSF	THOUSAND SQUARE FEET
KV	KILOVOLT
LAM	LAMINATED
LAT	LATERAL
LBS	POUNDS
LF	LENGTH FEET
LG	LONG
LI	LIFTING INSERT
LOS	LOCKOUT STOP
LP	LOW PRESSURE
LR	LONG RADIUS
LTG	LIGHTING
LV	LOW VOLTAGE, LINE VALVE
LVL	LEVEL
LVR	LOUVER
LWL	LOW WATER LEVEL
LWR	LOWER
MA	MILLIAMPERE
MAG	MAGNETIC
MAINT	MAINTENANCE
MAX	MAXIMUM
MBH	THOUSAND BTU'S PER HOUR
MBR	MEMBRANE SYSTEM
MBV	MOTORIZED BALL VALVE
MCC	MOTOR CONTROL CENTER
MCM	THOUSAND CIRCULAR MILS
MECH	MECHANICAL
MET	METAL
MFR	MANUFACTURER
MGD	MILLION GALLONS PER DAY
MG/L	MILLIGRAMS PER LITER
MH	MANHOLE
MI	MALLEABLE IRON
MIN	MINIMUM, MINUTE
MIR	MIRROR
MISC	MISCELLANEOUS
MJ	MECHANICAL JOINT
ML	MILLILITER, MIXED LIQUOR
MNL	MANUAL
MO	MOTOR OPERATOR
MOS	MOWING STRIP
MOT	MOTOR
MM	MILLIMETER
MNTG	MOUNTING
MP	MATURATION POND
MPPS	MP PUMP STATION
MPN	MOST PROBABLE NUMBER
MS	METAL STUDS
MT	METAL THRESHOLD
MTD	MOUNTED
MV	MUD VALVE, MILLIVOLTS
MWS	MAXIMUM WATER SURFACE
MWL	MEAN WATER LEVEL
MX	
	NON-AUTOMATIC
NA	NORMALLY CLOSED
NC	NON FREEZE YARD DRAIN
NFYD	NON FREEZE YARD HYDRANT
NFYH	

NIC	NOT IN CONTRACT
NIS	NOT IN SERVICE
NO	NORMALLY OPEN, NUMBER
NPL	NAMPLATE
NPS	NON-PROJECTING STEM
NPSH	NET POSITIVE SUCTION HEAD
NRS	NON-RISING STEM
NTS	NOT TO SCALE
NV	NEEDLE VALVE
NWL	NORMAL WATER LEVEL
OA	OUTSIDE AIR
OC	ON CENTER
OD	OUTSIDE DIAMETER, OXIDATION DIAMETER
OF	OUTSIDE FACE
OPER	OPERATOR (ING)
OVLD	OVERLOAD
OPNG	OPENING
OPP	OPPOSITE
OX	OXIDATION
PB	PULL BOX
PBV	PLASTIC BALL VALVE
P/C	PLAIN CONCRETE (NO REINFORCING)
PCHV	PINCH VALVE
PCMP	PERFORATED CORRUGATED METAL PIPE
PCV	PLASTIC CHECK VALVE
PEJ	PREMOLDED EXPANSION JOINT
PG	PRESSURE GAUGE (SEE DWG M21)
PH	PHASE, POST HYDRANT
PI	POINT OF INTERSECTION
PIT	PRESSURE INDICATING TRANSMITTER
PK	PEAK
PL	PLACES, PLATE, PROPERTY LINE
PLAC	PLASTIC LINED ASBESTOS CEMENT
PLSTC	PLASTIC
PLWD	PLYWOOD
PLYWD	PLYWOOD
PMS	PLANT MIX SURFACING
PNEU	PNEUMATIC
PNL	PANEL, PANEL BOARD
PP	POWER POLE, PIPE PENETRATION
PPLN	PIPELINE
PRCCP	PRESTRESSED CONCRETE CYLINDER PIPE
PREFAB	PREFABRICATED
PRESS	PRESSURE
PRFV	PRESSURE RELIEF VALVE
PRV	PRESSURE REGULATING (REDUCING) VALVE
PS	PRESSURE SWITCH, PIPE SUPPORT, PUMP STATION
PSF	POUNDS PER SQUARE FOOT
PSI	POUNDS PER SQUARE INCH
PSL	PIPE SLEEVE
PT	PLASTIC TUBING
PV	PLUG VALVE
PVC	POLYVINYL CHLORIDE (PIPE)
PVC-UVR	POLYVINYL CHLORIDE PIPE-UV RESISTANT
PVT	PAVEMENT
QCPLG	QUICK COUPLING
R	RISER, RADIUS
RA	RETURN AIR
RAD	RADIUS
RB	REDUCTION BRASS
RBO	REMOVED BY OTHERS (TO BE)
RC	REINFORCED CONCRETE
RCDR	RECORDER
RCP	REINFORCED CONCRETE PIPE
RCPT	RECEPTACLE
RD	ROOF DRAIN
RECOM	RECOMMEND (ATION)
RED	REDUCER
REFRD	REFRIGERATED
REHAB	REHABILITATE
REINF	REINFORCE (ING)
REM	REMOVABLE
REQMT	REQUIREMENT (S)
REQ'D	REQUIRED
REV	REVISED (IONS)
RFRO	ROUND FLANGE ROUND OPENING
RGS	RIGID GALVANIZED STEEL
RM	ROOM
RMV	REMOVE
RPM	REVOLUTIONS PER MINUTE
RR	RAILROAD
R&R	REMOVE AND RELOCATE (REINSTALL)
R&S	REMOVE AND SAVE (SALVAGE)
RST	REINFORCING STEEL
RUB	RUBBER
RV	RELIEF VALVE
R/W	RIGHT OF WAY
R&W	REMOVE AND WASTE
RWD	REDWOOD
RWL	RAIN WATER LEADER
RWP	RAIN WATER PIPE
S	START CONTACTOR
SA	SUPPLY AIR, SERVICE AIR
SARV	SEWAGE AIR RELEASE VALVE
SAVV	SEWAGE AIR VACUUM VALVE
SCAV	SEWAGE COMBINATION AIR VALVE
SCFM	STANDARD CFM
SCHED	SCHEDULE
SCV	SPLIT CHECK VALVE
SD	SPLITTER DAMPER, SOAP DISPENSER
SE	SEWER EASEMENT
SEC	SECOND
SECT	SECTION
SEL	SELECTOR
SFRO	SQUARE FLANGE ROUND OPENING

SFSO	SQUARE FLANGE SQUARE OPENING
SH	SHEET
SIM	SIMILAR
SLS	SARAN LINED STEEL
SO2	SULFUR DIOXIDE
SOLV	SOLENOID VALVE
SP	STRUCTURAL PLYWOOD, SLIDE GATE
S&P	SHELF AND POLE
SPEC	SPECIFICATIONS
SPRT	SUPPORT
SQ	SQUARE
SR	SHORT RADIUS
SRT	SOLIDS RETENTION TIME
SS	SERVICE SINK
SSB	SLUDGE STORAGE BASIN
SSB/S	STAINLESS STEEL BOLT W/ EXP SHIELD
S&S	STUB AND STOPPER
SST	STAINLESS STEEL
ST	START
STA	STATION
STD	STANDARD, STORM DRAIN
STIFF	STIFFENER
STL	STEEL
ST PR	STATIC PRESSURE
STR	STRAINER
STRG	STRONG
STRL	STRUCTURAL
SUC	SUCTION
SURF	SURFACE
SW	SWITCH
SWBD	SWITCHBOARD
SWD	SIDE WATER DEPTH
T&B	TOP AND BOTTOM
TB	THRUST BLOCK
TBA	TO BE ABANDONED
TC	TIME CLOSING CONTACT
TD	TANK DRAIN, TOWEL DISPENSER
TDH	TOTAL DYNAMIC HEAD
TE	TOTALLY ENCLOSED
TEL	TELEPHONE
TEMP	TEMPERATURE
T&G	TONGUE AND GROOVE
TH	TOILET PAPER HOLDER
THERM	THERMOMETER
THK	THICK
THY	THYRITE PROTECTOR
TIM	TIME METER - HOURS
TO	TIME OPENING
TOC	TOTAL ORGANIC CARBON, TOP OF CONCRETE
TOW	TOP OF WALL
TPI	TEST POWER INTERLOCK
TPU	TIME PICK-UP
TR	TIMING RELAY
TRANS	TRANSITION
TRD	STAIR TREAD
TS	STRUCTURAL TUBE
TSB	TERTIARY STORAGE BASINS
TSS	TOTAL SUSPENDED SOLIDS
TV	THERMOSTATIC VALVE
TYP	TYPICAL
UGND	UNDERGROUND
UHMW	ULTRA HIGH MOLECULAR WEIGHT
UN	UNION
UNO	UNLESS NOTED OTHERWISE
U/P	UTILITY POLE
UR	URNAL
V	VALVE, VENT, VOLTS
VAC	VACUUM, VOLTS, ALT CURRENT
VAR	VARIES (ABLE)
VAT	VINYL ASBESTOS TILE
VB	VALVE BOX, VACUUM BREAKER
VCP	VITRIFIED CLAY PIPE
VDC	VOLTS DIRECT CURRENT
VERT	VERTICAL
VG	VACUUM GAUGE
VSW	VACUUM SWITCH
VT	VINYL TILE
VTR	VENT THROUGH ROOF
W	WATTS, WIDTH
W/	WITH
WA	WEDGE ANCHOR
WC	WATER CLOSET, WATER COLUMN
WCO	WALL CLEANOUT
WD	WOOD
WG	WASTE GAS
WH	WATER HEATER, WHARF HYDRANT
WI	WROUGHT IRON
W/O	WITHOUT
WP	WEATHERPROOF
WPJ	WEAKENED PLANE JOINT
WS	WATER SURFACE
WSP	WELDED STEEL PIPE
WSTP	WATERSTOP
WTRPRF	WATERPROOF
WTRTT	WATERTIGHT
WWF	WELDED WIRE FABRIC
WWTP	WASTEWATER TREATMENT PLANT
WTHPRF	WEATHERPROOF
WWTRF	WASTEWATER TREATMENT AND RECLAMNTION FACILITY
XFMR	TRANSFORMER
YCO	YARD CLEANOUT
ZOP	ZINC ORTHOPHOSPHATE

NOTE:
NOT ALL ABBREVIATIONS APPEARING ON THIS SHEET ARE USED ON THESE DOCUMENTS.

ORIGINAL SHEET - ANSI D

Revision	By	Appd.	YY.MM.DD

Issued	By	Appd	YYYY.MM.DD
PERMIT SET	KM	GIA	2022.10.10

Permit/Seal

REGISTERED PROFESSIONAL ENGINEER
GABRIEL I. ARONOW
No. 55807
Exp.12/31/22
CIVIL
STATE OF CALIFORNIA

09/01/2022

Consultant

Stantec

Stantec Consulting Services Inc.
3875 Atherton Road
Rocklin CA 95765-3716
Tel: (916) 773-8100
www.stantec.com

Copyright Reserved
The Contractor shall verify and be responsible for all dimensions. DO NOT scale the drawing - any errors or omissions shall be reported to Stantec without delay.
The Copyrights to all designs and drawings are the property of Stantec. Reproduction or use for any purpose other than that authorized by Stantec is forbidden.

Client/Project Logo

Client/Project

City of San Juan Bautista

SANITARY SEWER FORCE MAIN TO HOLLISTER PROJECT

San Juan Bautista, California

File Name: 31441-G005	ASB	KM	GIA	2022.10.10
	Dwn.	Dsgn.	Chkd.	YYYY.MM.DD

Title

ABBREVIATIONS

Project No.	Scale
184031441	AS SHOWN
Revision	Sheet
0	5 of 128

Drawing No.

G005

\\<UNC path>\184031441\cad\arch\sht\31441-g005 2022.10.10 1:59:27 PM

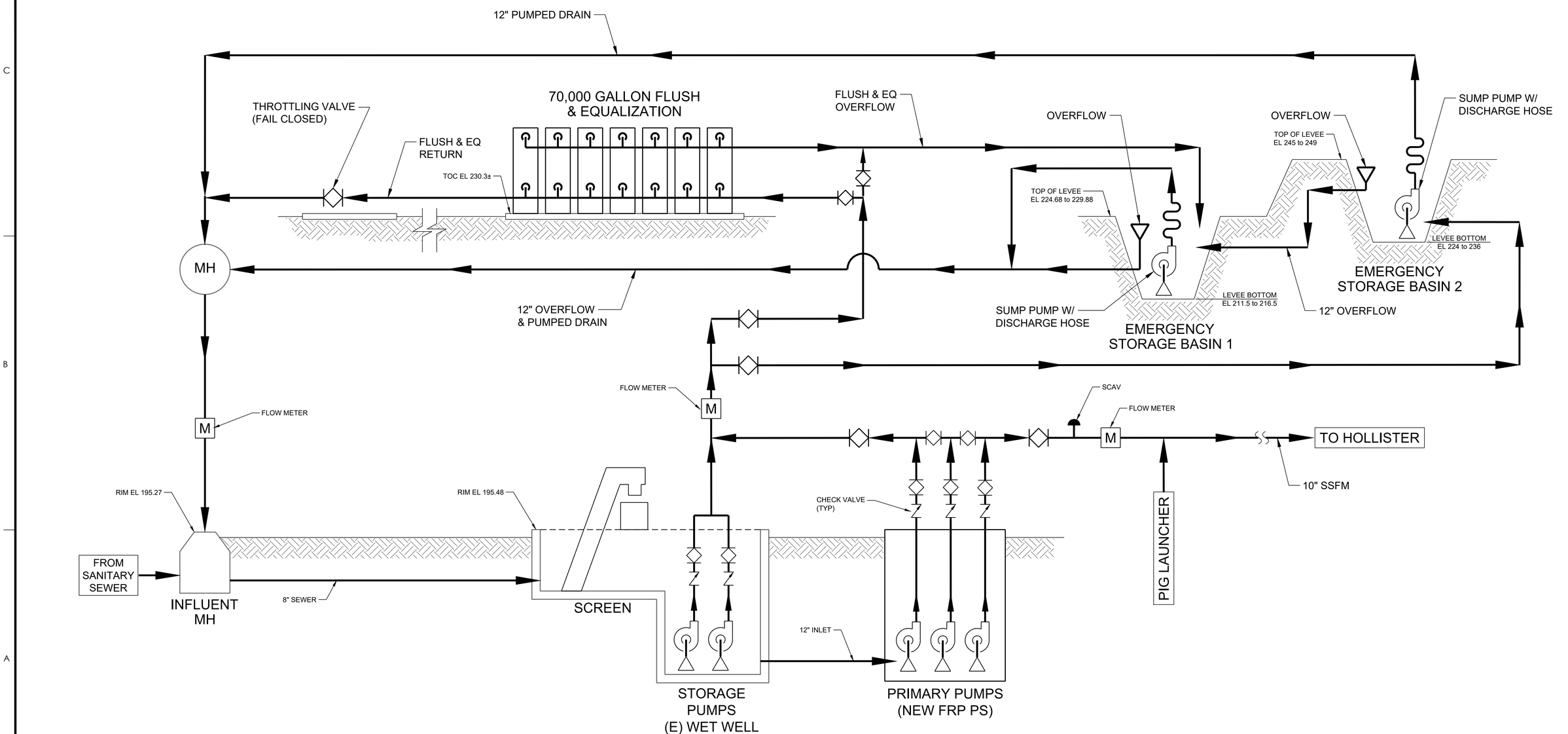

Revision	By	Appd.	YY.MM.DD

PERMIT SET	KM	GIA	2022.10.10
Issued	By	Appd	YYYY.MM.DD

Permit/Seal

REGISTERED PROFESSIONAL ENGINEER GABRIEL I. ARONOW No.55607 Exp.12/31/22 CIVIL STATE OF CALIFORNIA

09/01/2022

Consultant

Stantec

Stantec Consulting Services Inc.
3875 Atherton Road
Rocklin CA 95765-3716
Tel: (916) 773-8100
www.stantec.com

Copyright Reserved
The Contractor shall verify and be responsible for all dimensions. DO NOT scale the drawing - any errors or omissions shall be reported to Stantec without delay.
The Copyrights to all designs and drawings are the property of Stantec. Reproduction or use for any purpose other than that authorized by Stantec is forbidden.

Client/Project Logo

Client/Project

City of San Juan Bautista

SANITARY SEWER FORCE MAIN TO HOLLISTER PROJECT

San Juan Bautista, California

File Name: 31441-G006	ASB	KM	GIA	2022.10.10
	Dwn.	Dsgn.	Chkd.	YYYY.MM.DD

Title

PROCESS FLOW DIAGRAM

Project No.	Scale
184031441	AS SHOWN

Revision	Sheet	Drawing No.
0	6 of 128	G006

ORIGINAL SHEET - ANSI D

v:\1840\active\184031441\drawing\act\31441-g006 2022.10.10 2:00:52 PM

© c 2018 California Department of Transportation
All Rights Reserved

NOTES:

See Revised Standard Plan RSP T9 for tables.

Use cone spacing X for taper segment, Y for tangent segment or Z for conflict situations, as appropriate, per Table 1, unless X, Y, or Z cone spacing is shown on this sheet.

Provide at least one person to continuously maintain traffic control devices for lane closures.

TYPICAL LANE CLOSURE WITH REVERSIBLE CONTROL

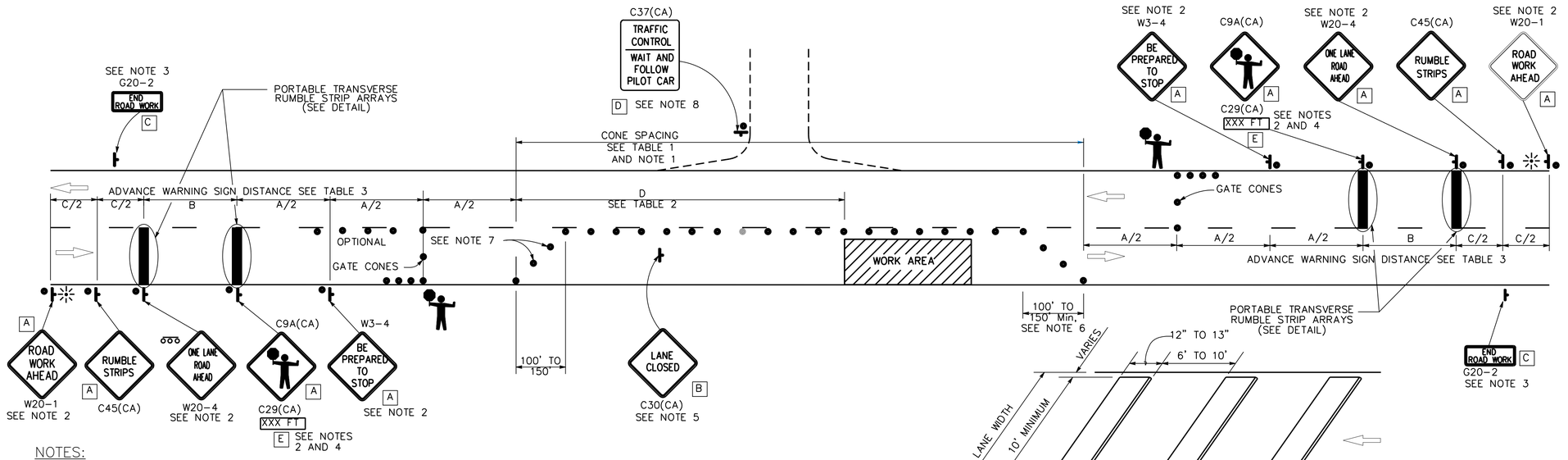

NOTES:

1. PORTABLE DELINEATORS PLACED AT ONE–HALF THE SPACING INDICATED FOR TRAFFIC CONES MAY BE USED INSTEAD OF CONES FOR DAYTIME CLOSURES ONLY.
2. EACH ADVANCE WARNING SIGN SHALL BE EQUIPPED WITH AT LEAST TWO FLAGS FOR DAYTIME CLOSURE. EACH FLAG SHALL BE AT LEAST 16" X 16" IN SIZE AND SHALL BE ORANGE OR FLUORESCENT RED–ORANGE IN COLOR. FLASHING BEACONS SHALL BE PLACED AT THE LOCATIONS INDICATED FOR LANE CLOSURE DURING HOURS OF DARKNESS.
3. A G20–2 "END ROAD WORK" SIGN, SHALL BE PLACED AT THE END OF THE LANE CLOSURE UNLESS THE END OF WORK AREA IS OBVIOUS OR ENDS WITHIN THE LARGER PROJECT'S LIMITS.
4. AN OPTIONAL C29(CA) SIGN MAY BE PLACED BELOW THE C9A(CA) SIGN.
5. PLACE C30(CA) "LANE CLOSED" SIGN AT 500' TO 1000' INTERVALS THROUGHOUT EXTENDED WORK AREA. THEY ARE OPTIONAL IF THE WORK AREA IS VISIBLE FROM THE FLAGGER STATION.
6. LENGTH MAY BE REDUCED BY THE ENGINEER TO ADDRESS SITE CONDITIONS.
7. EITHER TRAFFIC CONES OR BARRICADES SHALL BE PLACED ON THE TAPER. BARRICADES SHALL BE TYPE I, II, OR III.
8. WHEN A PILOT CAR IS USED, PLACE A C37(CA) "TRAFFIC CONTROL–WAIT AND FOLLOW PILOT CAR" SIGN WITH BLACK LEGEND ON WHITE BACKGROUND AT ALL INTERSECTIONS, DRIVEWAYS AND ALLEYS WITHOUT A FLAGGER WITHIN THE TRAFFIC CONTROL AREA.
9. THE CONTRACTOR SHALL SUBMIT TRAFFIC CONTROL PLANS FOR APPROVAL AND CLEARLY INDICATE CLOSURE TIMES IN EACH DIRECTION.
10. FOR WORK THROUGH INTERSECTIONS AND RESIDENTIAL NEIGHBORHOODS, CONTRACTOR SHALL SUBMIT FOR APPROVAL TRAFFIC CONTROL PLANS FOR SPECIFIC AREAS.

PORTABLE TRANSVERSE RUMBLE STRIP ARRAY DETAIL

SIGN PANEL SIZE (Min)

A	48" x 48"
B	30" x 30"
C	36" x 18"
D	36" x 42"
E	20" x 7"

LEGEND

- TRAFFIC CONE
- TEMPORARY TRAFFIC CONTROL SIGN
- PORTABLE FLASHING BEACON
- FLAGGER

STATE OF CALIFORNIA
DEPARTMENT OF TRANSPORTATION

TRAFFIC CONTROL SYSTEM FOR LANE CLOSURE ON TWO LANE CONVENTIONAL HIGHWAYS

NO SCALE

RSP T13 DATED APRIL 20, 2018 SUPERSEDES STANDARD PLAN T13
DATED OCTOBER 30, 2015 – PAGE 254 OF THE STANDARD PLANS BOOK DATED 2015.

REVISED STANDARD PLAN RSP T13

11–8–17

2015 REVISED STANDARD PLAN RSP T13

CONTRACTOR SHALL FOLLOW CALTRANS TRAFFIC CONTROL PLAN RSP T13 DURING CONSTRUCTION. CURRENT PLAN IS SHOWN AS REFERENCE ONLY. CONTRACTOR MAY MODIFY THE TRAFFIC CONTROL REQUIREMENTS AS SUITED TO THE JOB SITE.

ORIGINAL SHEET - ANSI D

Revision	By	Appd.	YY.MM.DD
PERMIT SET	KM	GIA	2022.10.10
Issued	By	Appd	YYYY.MM.DD

Permit/Seal

REGISTERED PROFESSIONAL ENGINEER
GABRIEL I. ARONOW
No. 55607
CIVIL
STATE OF CALIFORNIA
10/20/22
09/01/2022

Consultant

Stantec
Stantec Consulting Services Inc.
3875 Atherton Road
Rocklin CA 95765-3716
Tel: (916) 773-8100
www.stantec.com

Copyright Reserved
The Contractor shall verify and be responsible for all dimensions. DO NOT scale the drawing - any errors or omissions shall be reported to Stantec without delay. The Copyrights to all designs and drawings are the property of Stantec. Reproduction or use for any purpose other than that authorized by Stantec is forbidden.

Client/Project Logo

Client/Project
City of San Juan Bautista

SANITARY SEWER FORCE MAIN TO HOLLISTER PROJECT

San Juan Bautista, California

File Name: 31441-G007 | AMV Dwn. | KM Dsgn. | GIA Chkd. | 2022.10.10 YYYY.MM.DD

Title
TRAFFIC CONTROL PLAN

Project No. 184031441
Scale AS SHOWN
Revision 0
Sheet 7 of 128
Drawing No. G007

I:\184\Capture\184031441\Drawing\Plot\31441-g007 2022.10.10 2:03:31 PM

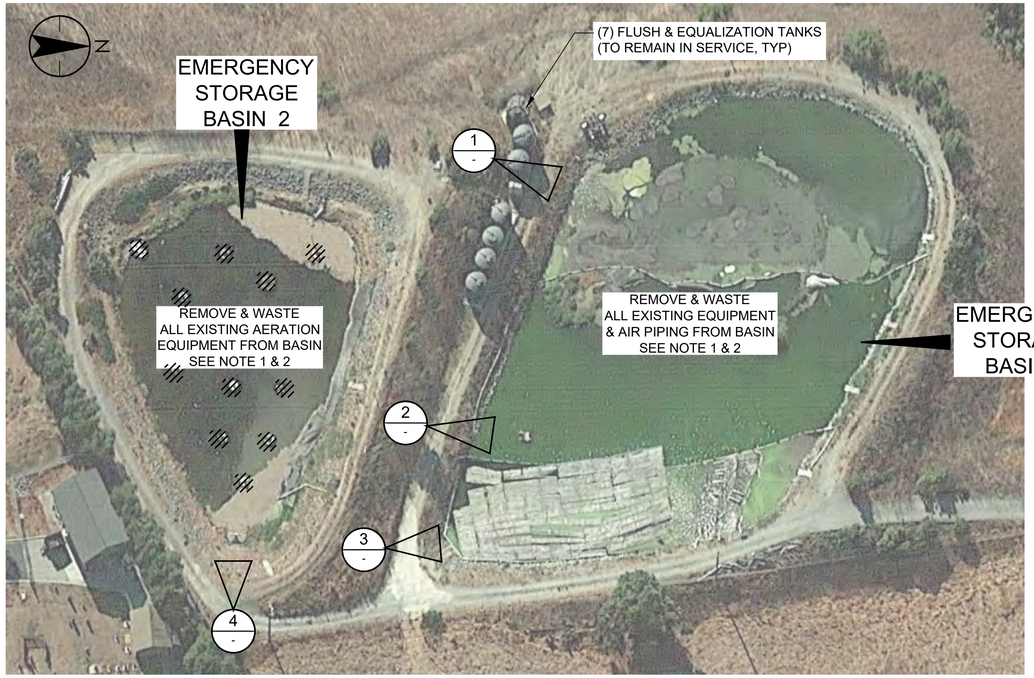

PHOTO DEMOLITION PLAN
SCALE: NONE

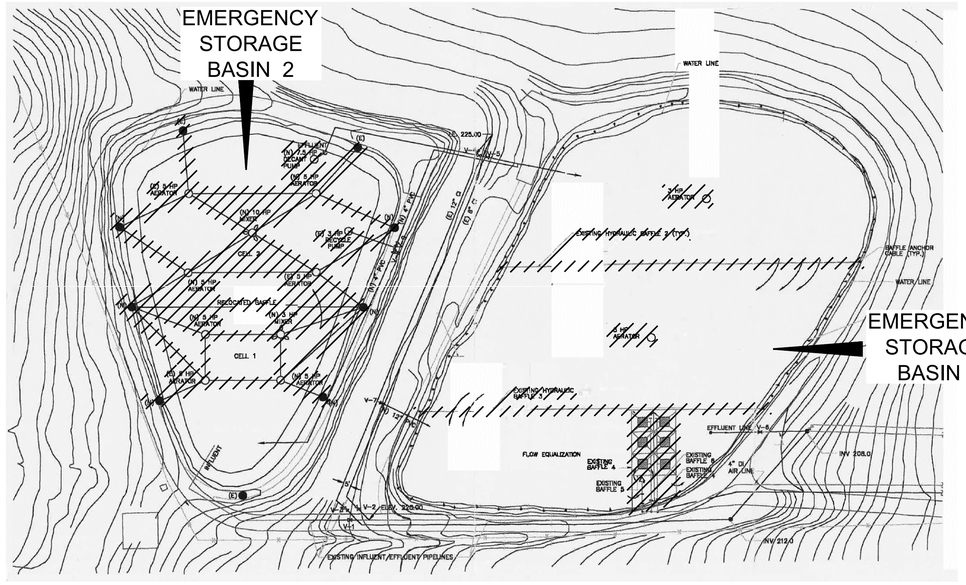

DEMOLITION PLAN
SCALE: NONE

NOTES:

1. CONTRACTOR IS REQUIRED TO PREPARE AND SUBMIT A WORK PLAN FOR APPROVAL FOR BASIN CONTENTS, INCLUDING SLUDGE, BASINS SHALL BE LEFT CLEAN TO MINERAL EARTH OR THE LINER, IF LINER EXISTS.
2. SEE WORK LIMITS SHOWN ON C020.

DEMOLITION PHOTO 1 - SCALE: NONE

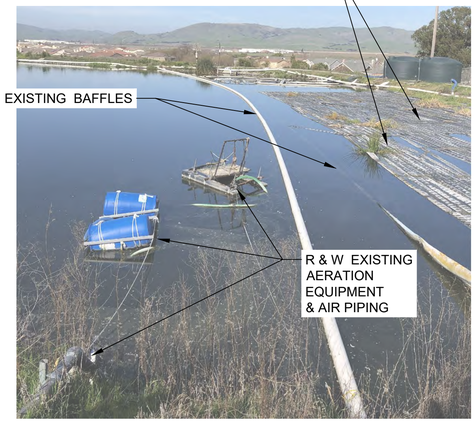

DEMOLITION PHOTO 2 - SCALE: NONE

DEMOLITION PHOTO 3 - SCALE: NONE

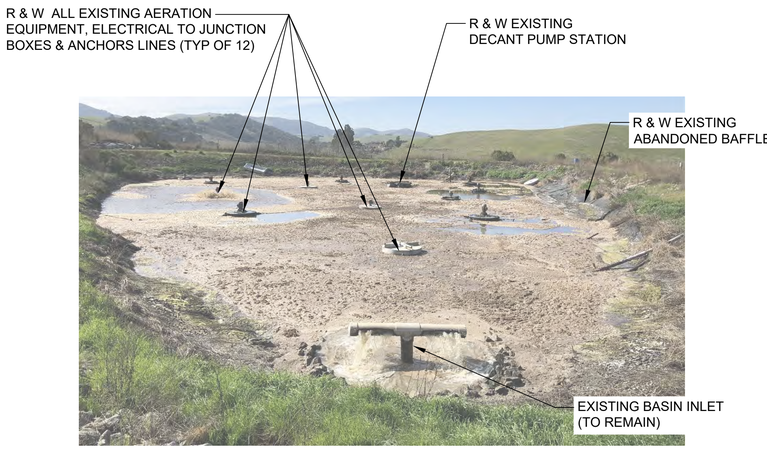

DEMOLITION PHOTO 4 - SCALE: NONE

Revision	By	Appd.	YY.MM.DD
PERMIT SET	KM	GIA	2022.10.10
Issued	By	Appd	YYYY.MM.DD

Permit/Seal

REGISTERED PROFESSIONAL ENGINEER GABRIEL I. ARONOW No.55607 Exp.12/31/22 CIVIL STATE OF CALIFORNIA

09/01/2022

Consultant

Stantec

Stantec Consulting Services Inc.
3875 Atherton Road
Rocklin CA 95765-3716
Tel: (916) 773-8100
www.stantec.com

Copyright Reserved
The Contractor shall verify and be responsible for all dimensions. DO NOT scale the drawing - any errors or omissions shall be reported to Stantec without delay. The Copyrights to all designs and drawings are the property of Stantec. Reproduction or use for any purpose other than that authorized by Stantec is forbidden.

Client/Project Logo

Client/Project
City of San Juan Bautista
SANITARY SEWER FORCE MAIN TO HOLLISTER PROJECT
San Juan Bautista, California

File Name: 31441-D001, D002 & D003 | ASB Dwn. | GIA Dsgn. | KM Chkd. | 2022.10.10 YYYY.MM.DD

Title
EMERGENCY STORAGE BASIN 1 & 2 DEMOLITION

Project No. 184031441 | Scale AS SHOWN
Revision 0 | Sheet 8 of 128 | Drawing No. D001

ORIGINAL SHEET - ANSI D
\\1845\Conf\m\184031441\dtl\dwg\sct\31441-d001, d002 & d003 2022.10.10 2:03:55 PM

UV DISINFECTION CHANNEL
DEMOLITION PHOTO (1)
SCALE: NONE SEE NOTE 1

FILTER SYSTEM
DEMOLITION PHOTO (2)
SCALE: NONE SEE NOTE 1

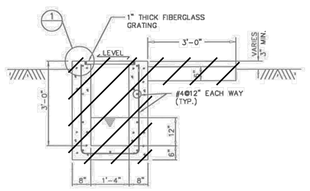

SECTION A
SCALE: 3/4"=1'-0"

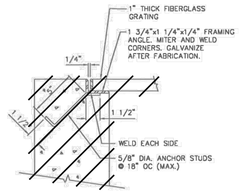

DETAIL 1
SCALE: 3"=1'-0"

NOTES:

1. SEE WORK LIMITS SHOWN ON C020.
2. BACKFILL TO GRADE WITH ENGINEERED FILL AT 90% COMPACTION.

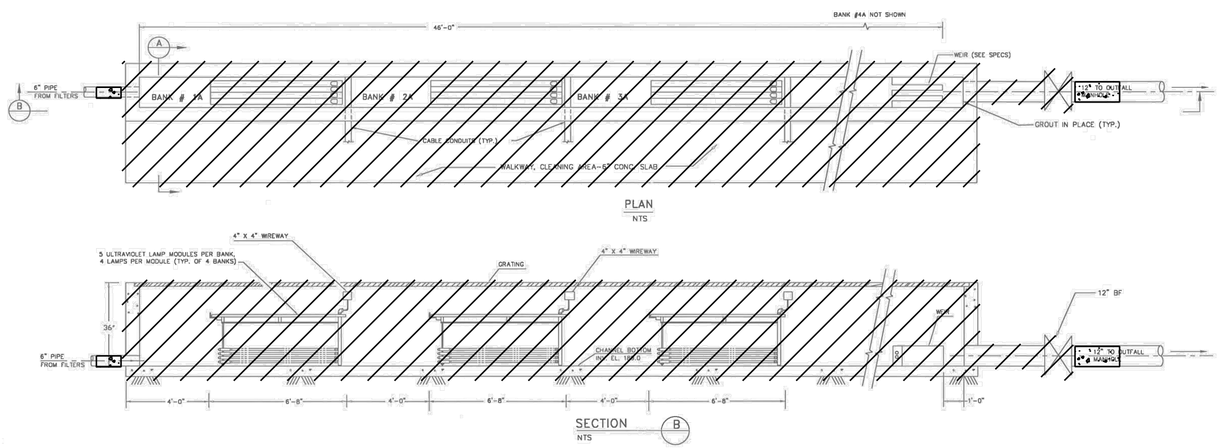

UV DISINFECTION CHANNEL
DEMOLITION PLAN, SECTIONS & DETAIL
SCALE: NONE SEE NOTE 1 & 2

FILTER SYSTEM
DEMOLITION PHOTO (3)
SCALE: NONE SEE NOTE 1

FILTER SYSTEM
DEMOLITION PHOTO (4)
SCALE: NONE SEE NOTE 1

Revision	By	Appd.	YY.MM.DD
PERMIT SET	KM	GIA	2022.10.10
Issued	By	Appd	YYYY.MM.DD

Permit/Seal

REGISTERED PROFESSIONAL ENGINEER
GABRIEL I. ARONOW
No. 55607
Exp.12/31/22
CIVIL
STATE OF CALIFORNIA

09/01/2022

Consultant

Stantec

Stantec Consulting Services Inc.
3875 Atherton Road
Rocklin CA 95765-3716
Tel: (916) 773-8100
www.stantec.com

Copyright Reserved
The Contractor shall verify and be responsible for all dimensions. DO NOT scale the drawing - any errors or omissions shall be reported to Stantec without delay.
The Copyrights to all designs and drawings are the property of Stantec. Reproduction or use for any purpose other than that authorized by Stantec is forbidden.

Client/Project Logo

Client/Project
City of San Juan Bautista

SANITARY SEWER FORCE MAIN
TO HOLLISTER PROJECT

San Juan Bautista, California

File Name: 31441-D001, D002 & D003 | ASB Dwn. | GIA Dsgn. | KM Chkd. | 2022.10.10 YYYY.MM.DD

Title
UV DISINFECTION CHANNEL AND
FILTER SYSTEM DEMOLITION

Project No.	Scale
184031441	AS SHOWN
Revision	Sheet
0	9 of 128

Drawing No.
D002

\\ENG-cpnfs\Projects\184031441\Drawing\dwt\31441-d001, d002 & d003 ORIGINAL SHEET - ANSI D
2022.10.27 8:20:49 AM

NOTES:
1. SEE WORK LIMITS SHOWN ON C020.

NOTE:
1. SEE SHEET NO.4 FOR CHLORINATION CONTACT PIPE LOCATION AND CONFIGURATION
2. PROVIDE MIN. 4" PEA GRAVEL BASE BELOW PIPE, COMPACT BACKFILL
3. CHLORINATION CONTACT PIPE SHALL BE LEVEL AND WATERTIGHT

MH 6
OUTFALL MH.

TAKE EFFLUENT SAMPLES HERE

24" DIA. REINFORCED ASTM C-76 CLASS IV, WALL C WITH Cl_2 RESISTANT RUBBER GASKETS ASTM C443

¼ BEND (TYP.)

R & W EXISTING CHLORINE CONTACT PIPING & STRUCTURES

P-2A

ELECTRICAL CONDUIT MIN. 12" BURIAL

CHLORINATION MANHOLE MH5

3" PVC PIPE SLEEVE FOR PUMP ON AND OFF MERCURY SWITCHES

1" PUMP DISCHARGE CHLORINE SOLUTION

1" PUMP SUCTION PROCESS WATER

26'-0" ±

OPENING IN STEEL FLOOR FOR PIPING AND CONDUIT (SEE UTILITY ACCESS DETAIL)

3" PVC FLOOR DRAIN

Cl_2 GAS DETECTOR

Cl_2 VENT (1 2½" SIG.-CA

ELECTRICAL CONDUIT (CONTINUE CONDUIT UP THROUGH CONC. FOUNDATION AND CONNECT TO TRANSMITTER

CHLORINATION BUILDING (SEE CHLORINATION SYSTEM NOTE)

CHLORINATOR (WALL MOUNTED)

FLOW TRANSMITTED (WALL MOUNTED)

CHLORINE INJECTOR

TWO CYLINDER SCALE

BOOSTER TURBINE PUMP

2 #12 & 4 #14 ⅜" C

EXHAUST FAN AND DUCT (AT FLOOR LEVEL)

ELECTRICAL CONTROL PANEL 3 #8 - 1" C. TO PANEL "DP" (SEE SHEET NO. 15)

WALK RAMP

ASPHALT PAVEMENT

CONCRETE

Cl_2 CYLINDER STORAGE

CONCRETE WALKWAY

GAS MASK ENCLOSURE (WALL MOUNTED)

(E) CONTROL BUILDING SEE DWG D200 & M200 2A

R & W ALL EXISTING CHLORINE SYSTEM BUILDING & EQUIPMENT. PULL ALL ELECTRICAL CONDUCTORS TO JUNCTION BOXES.
BACKFILL TO GRADE WITH ENGINEERED FILL AT 90% COMPACTION

EL. 187.83 BOOSTER PUMP OFF EL. 182.77
4-mA DC - 0 GPM

SPRING RELIEF VALVE (DISCHARGE TO SUMP)
PRESSURE GAUGE
REDUCER
BOOSTER PUMP
INCREASER
CHECK VALVE
CHLORINE INJECTOR WITH ¼" POLYETHYLENE TUBING CONN. TO CHLORINATOR
SAMPLE VALVE
NEEDLE VALVE PRESSURE REGULATOR
1" SELF CLEANING STAINER DRAIN TO SUMP
1" PVC PLUG VALVE (TYP.)
1" PROCESS WATER (PUMP SUCTION)
1" CHLORINE SOLUTION (PUMP DISCHARGE)

BOOSTER PUMP PIPING DETAIL

3" PVC PIPE SLEEVE FOR MERCURY SWITCH CORDS
3" SUMP DRAIN
1" PROCESS WATER (PUMP SUCTION)
1" CHLORINATION SOLUTION (PUMP DISCHARGE)
WALL/CHLORINATION BLDG.
SEAL WATERTIGHT BETWEEN STEEL FLOOR AND CONC. FOUNDATION
2% SLOPE TO DRAIN (TYP.) (DEPRESSION IN CONCRETE)

UTILITY ACCESS DETAIL
½" = 1'-0"

1" CHLORINE SOLUTION
½" S.S. ANCHORS (8 REQ'D.)
¼" NEOPRENE GASKET TO INSURE WATERTIGHT CONNECTION
24" DIA. CHLORINATION CONTACT PIPE
STATIC MIXER FLG. x P.E.
℄ OF PIPE
6" PVC ELBOW P.E. x FLG.
STAINLESS STEEL BOLTS (TYP.)
¼" x 24" DIA. STAINLESS STEEL PLATE WITH 6" DIA. OPENING IN CENTER DRILLED FOR BOLTS AND ANCHORS

MIXER INSTALLATION DETAIL
1" = 1'-0"

MH5
60" CHLORINATION MH.
12" POND OUTLET
P-2B
1'-6" 2'-0" 1'-6"
24" DIA. CHLORINATION CONTACT PIPE
P-2B
P-2C
6" STATIC MIXER
12" OUTFALL PIPE
60" OUTFALL MH. SHALL CONFORM TO ASTM C-478
MH6
SLIDE GATE AND GUIDES
P-2C

CONTROL BUILDING
3'-0" WALK
1'-0"
6'-0" CHLORINATION BUILDING
1'-0"
4'-0"
PROVIDE S.S. ANCHOR BOLTS EMBED INTO CONC. PER MANUF. INSTRUCTIONS (TYP.)
2% SLOPE (TYP.) ALL SIDES
BOOSTER TURBINE PUMP (SEE BOOSTER PUMP NOTE)
8' x10' x 4" CONCRETE FOUNDATION EL. 193.25
24" DIA. D.I. MH. FRAME AND COVER RIM EL. 191.5
#5 @ 12" O.C. E.W.
6 MIL POLYETHYLENE VAPOR BARRIER
4" GRANULAR FOUNDATION MATERIAL
1" PUMP DISCHARGE (CHLORINE SOLUTION)
60" CHLORINATION MH. WITH FLAT SLAB TOP SHALL CONFORM TO ASTM C-478
MH5

SECTION P-2A
½" = 1'-0"

PLAN

CONCRETE COLLAR (TYP.)
1" PUMP SUCTION PROCESS WATER
RIM EL. 191.5
1" PUMP DISCHARGE (CHLORINE SOLUTION)
60" DIA. CHLORINATION MANHOLE
CHLORINATION INLET TOP EL. 188.0
12" DIA. POND OUTLET
12" PVC TEE BRANCH INV. EL. 186.0
1" CHLORINE SOLUTION LINE BOTTOM EL. 182.0
℄ EL. 181.5
BOT./EL. 181.0
BOT./EL. 180.5
MINIMUM 4" PEA GRAVEL BASE (TYP.)
EL. 176.5
6" PVC SCH. 80 (SOLVENT WELD) PIPE
6" STATIC MIXER ℄ EL. 181.5 (SEE MIXER NOTE)
24" DIA. CHLORINATION CONTACT PIPE INV. EL. 180.5

SECTION P-2B

CHLORINATION MANHOLE DETAIL
MH5

R & W EXISTING CHLORINE CONTACT PIPING & STRUCTURES

PLAN

1" PVC SCH. 40 ELECTRICAL CONDUIT FOR CONTINUOUS SIGNAL CABLE BETWEEN SENSOR AND TRANSMITTER
FLOW LEVEL SENSOR WITH STAINLESS STEEL SUPPORT BRACKET, BOT. EL. 186.0
60" DIA. OUTFALL MH. W/ FLAT SLAB TOP
24" DIA. D.I. MH. FRAME AND COVER (TYP.)
SLIDE GATE AND GUIDES (SEE DETAIL) SCH.80
12" P.V.C OUTFALL PIPE CHLORINATED
GROUT CHANNEL INV. EL. 180.5
OUTFALL OUTLET STRUCTURE
OUTFALL OUTLET INV. EL. 180.0
4'-0"
TAKE EFFLUENT SAMPLES HERE

SECTION P-2C

OUTFALL MANHOLE AND OUTFALL DETAIL
MH6

SECTION X-X

SLIDE GATE DETAIL
SCALE 1" = 1'-0"

12" DIA. PVC PIPE
#4 BARS
#4 @ 12" O.C.
CONST. JT. OPTIONAL
2'-0"

SECTION Y-Y

R & W EXISTING OUTFALL PIPE & STRUCTURE

Revision	By	Appd.	YY.MM.DD

PERMIT SET	KM	GIA	2022.10.10
Issued	By	Appd	YYYY.MM.DD

Permit/Seal
REGISTERED PROFESSIONAL ENGINEER GABRIEL I. ARONOW No. 55607 Exp.12/31/22 CIVIL STATE OF CALIFORNIA
09/01/2022

Consultant

Stantec
Stantec Consulting Services Inc.
3875 Atherton Road
Rocklin CA 95765-3716
Tel: (916) 773-8100
www.stantec.com

Copyright Reserved
The Contractor shall verify and be responsible for all dimensions. DO NOT scale the drawing - any errors or omissions shall be reported to Stantec without delay.
The Copyrights to all designs and drawings are the property of Stantec. Reproduction or use for any purpose other than that authorized by Stantec is forbidden.

Client/Project Logo

Client/Project
City of San Juan Bautista
SANITARY SEWER FORCE MAIN TO HOLLISTER PROJECT
San Juan Bautista, California

File Name: 31441-D001, D002 & D003 | ASB Dwn. | GIA Dsgn. | KM Chkd. | 2022.10.10 YYYY.MM.DD

Title
CHLORINATION FACILITIES DEMOLITION

Project No. 184031441
Scale AS SHOWN
Revision 0
Sheet 10 of 128
Drawing No. D003

\\1845\Confirm\184031441\Ultimate\plot\31441-d001, d002 & d003 2022.10.10 2:56:44 PM
ORIGINAL SHEET - ANSI D

NOTES:

1. SEE WORK LIMITS SHOWN ON C020.
2. BACKFILL ALL DEMOLISHED INFRASTRUCTURE WITH ENGINEERED FILL, COMPACT TO 90% AND SLOPE TO DRAIN.

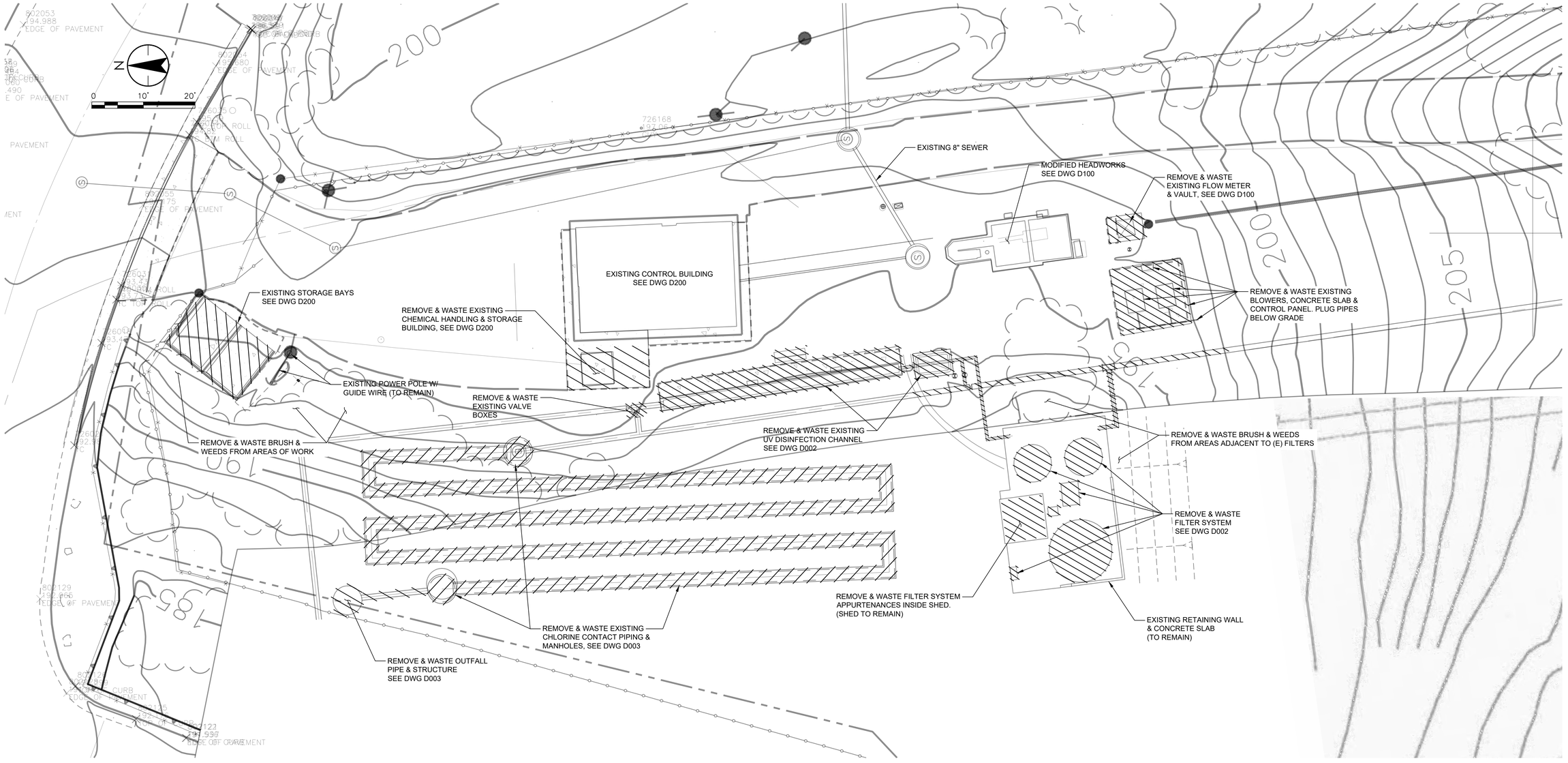

Revision	By	Appd.	YY.MM.DD

PERMIT SET	KM	GIA	2022.10.10
Issued	By	Appd	YYYY.MM.DD

Permit/Seal

REGISTERED PROFESSIONAL ENGINEER GABRIEL I. ARONOW No.55607 Exp.12/31/22 CIVIL STATE OF CALIFORNIA

09/01/2022

Consultant

Stantec

Stantec Consulting Services Inc.
3875 Atherton Road
Rocklin CA 95765-3716
Tel: (916) 773-8100
www.stantec.com

Copyright Reserved

The Contractor shall verify and be responsible for all dimensions. DO NOT scale the drawing - any errors or omissions shall be reported to Stantec without delay. The Copyrights to all designs and drawings are the property of Stantec. Reproduction or use for any purpose other than that authorized by Stantec is forbidden.

Client/Project Logo

Client/Project

City of San Juan Bautista

SANITARY SEWER FORCE MAIN TO HOLLISTER PROJECT

San Juan Bautista, California

File Name: 31441-D020	ASB	GIA	KM	2022.10.10
	Dwn.	Dsgn.	Chkd.	YYYY.MM.DD

Title

CONTROL BUILDING AND HEADWORKS DEMOLITION PLAN

Project No.	Scale
184031441	1" = 10'

Revision	Sheet	Drawing No.
0	11 of 128	D020

ORIGINAL SHEET - ANSI D

v:\1840\active\184031441\drawing\act\31441-d020 2022.10.27 8:53:01 AM

NOTES:

1. SEE WORK LIMITS SHOWN ON C020.
2. EPOXY FILL ALL ANCHOR HOLES FLUSH WITH WALL.

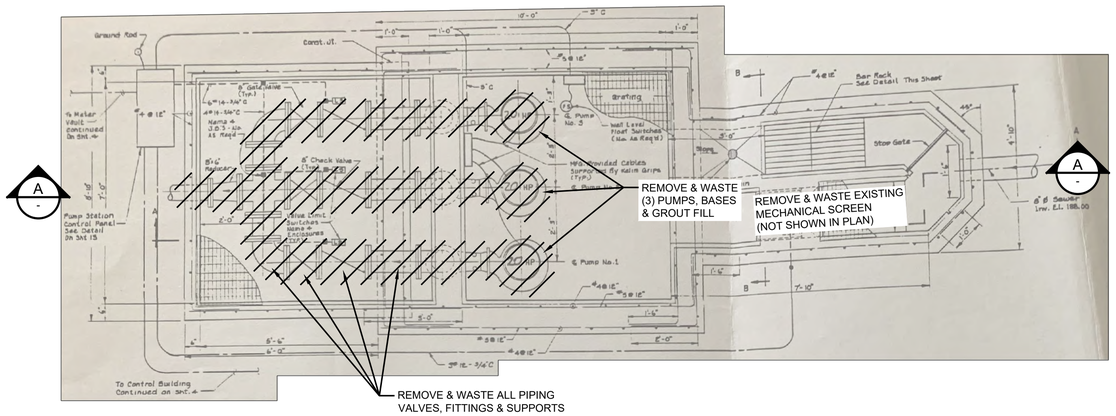

DEMOLITION PLAN
SCALE: NONE

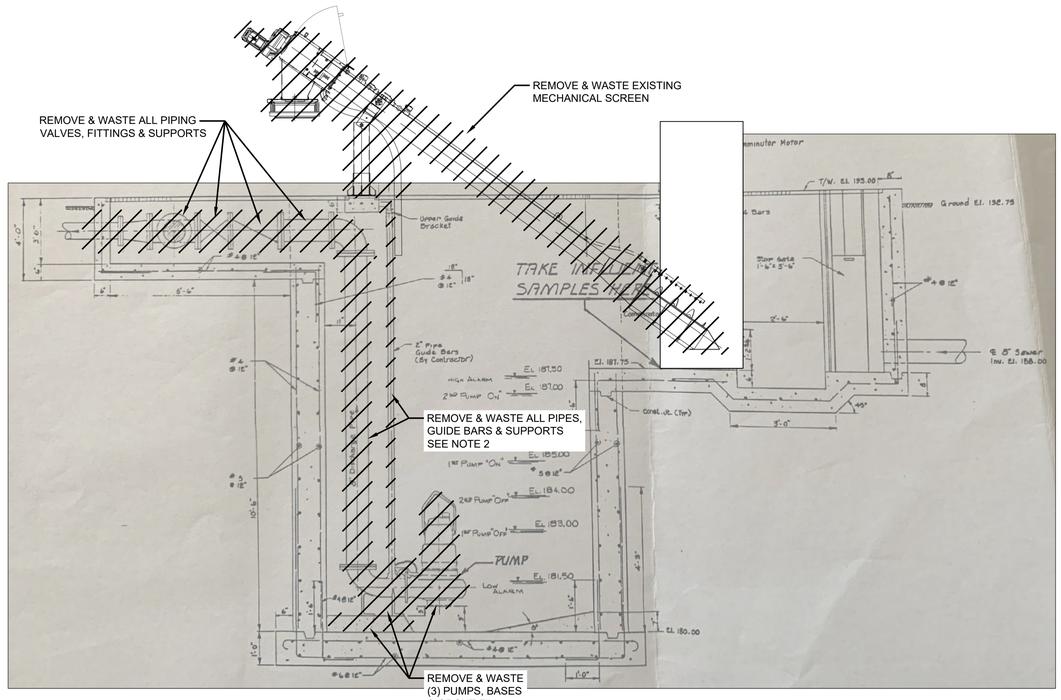

DEMOLITION SECTION (A)
SCALE: NONE

Revision	By	Appd.	YY.MM.DD

Issued	By	Appd	YYYY.MM.DD
PERMIT SET	KM	GIA	2022.10.10

Permit/Seal

REGISTERED PROFESSIONAL ENGINEER
GABRIEL I. ARONOW
No.55607
Exp.12/31/22
CIVIL
STATE OF CALIFORNIA

09/01/2022

Consultant

Stantec

Stantec Consulting Services Inc.
3875 Atherton Road
Rocklin CA 95765-3716
Tel: (916) 773-8100
www.stantec.com

Copyright Reserved
The Contractor shall verify and be responsible for all dimensions. DO NOT scale the drawing - any errors or omissions shall be reported to Stantec without delay. The Copyrights to all designs and drawings are the property of Stantec. Reproduction or use for any purpose other than that authorized by Stantec is forbidden.

Client/Project Logo

Client/Project

City of San Juan Bautista

SANITARY SEWER FORCE MAIN TO HOLLISTER PROJECT

San Juan Bautista, California

File Name: 31441-D100	ASB	GIA	KM	2022.10.10
	Dwn.	Dsgn.	Chkd.	YYYY.MM.DD

Title

HEADWORKS DEMOLITION PLAN AND SECTION

Project No.	Scale
184031441	AS SHOWN

Revision	Sheet	Drawing No.
0	12 of 128	D100

ORIGINAL SHEET - ANSI D

v:\1840\active\184031441\drawing\act\31441-d100
2022.10.10 2:12:52 PM

STORAGE BAYS DEMOLITION NOTES:

1. THE CITY WILL REMOVE ALL STORED MATERIALS PRIOR TO THE DEMOLITION OF THE STORAGE BAYS.
2. THE TWO STORAGE BAY ARE 12' x 8' WALLS SHARING ONE WALL. WALLS ARE APPROXIMATELY 56" TALL x 16" THICK REINFORCED CMU BLOCK. THE THICKNESS OF THE FOUNDATION IS NOT KNOWN.
3. DO NOT DAMAGE OR DISTURB THE EXISTING POWER POLE, GUIDE WIRE OR GUIDE WIRE ANCHOR.
4. SEE WORK LIMITS SHOWN ON C020

STORAGE BAYS DEMOLITION DETAIL

SCALE: NONE

CONTROL BUILDING DEMOLITION NOTES:

1. SEE WORK LIMITS SHOWN ON C020.

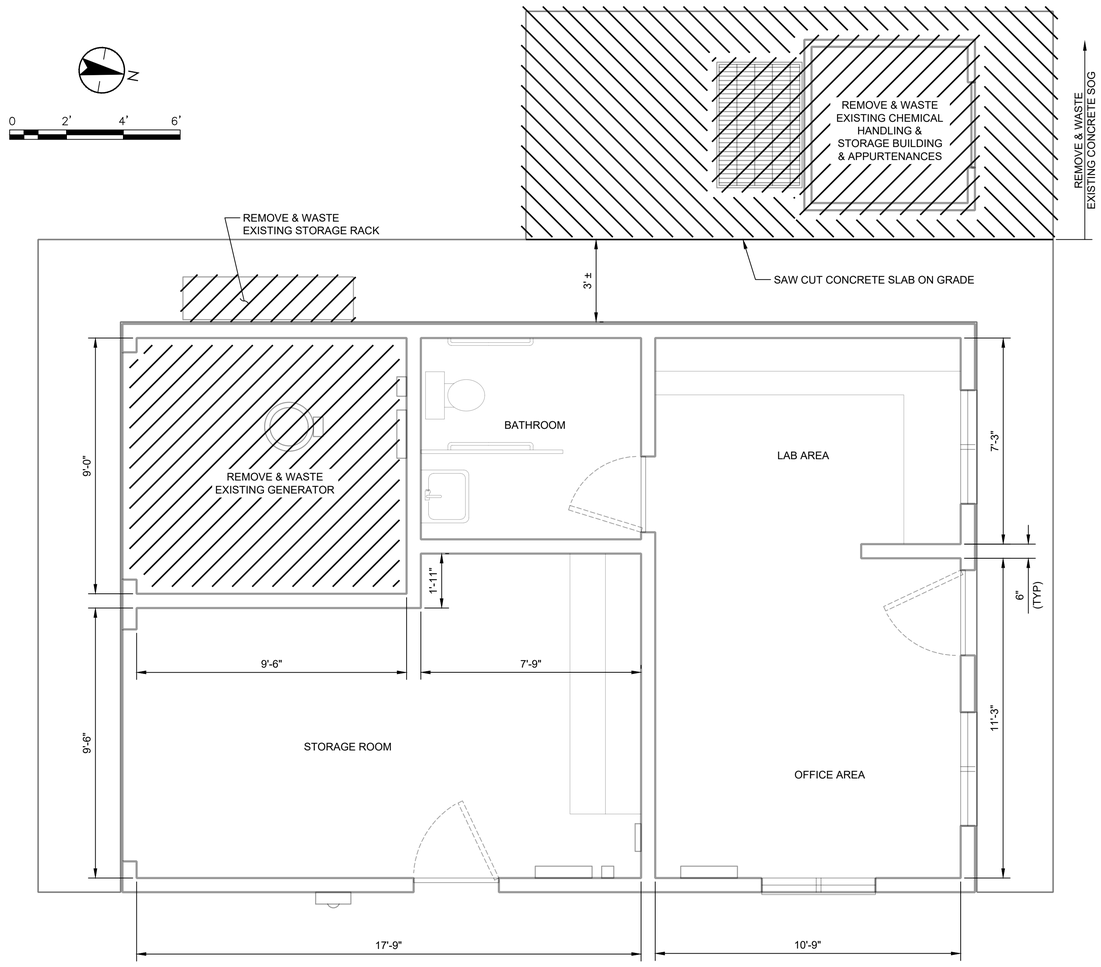

CONTROL BUILDING DEMOLITION PLAN

SCALE: 3/8" = 1'-0"

Revision	By	Appd.	YY.MM.DD
PERMIT SET	KM	GIA	2022.10.10
Issued	By	Appd	YYYY.MM.DD

Permit/Seal

REGISTERED PROFESSIONAL ENGINEER
GABRIEL I. ARONOW
No. 55607
Exp.12/31/22
CIVIL
STATE OF CALIFORNIA

09/01/2022

Consultant

Stantec

Stantec Consulting Services Inc.
3875 Atherton Road
Rocklin CA 95765-3716
Tel: (916) 773-8100
www.stantec.com

Copyright Reserved
The Contractor shall verify and be responsible for all dimensions. DO NOT scale the drawing - any errors or omissions shall be reported to Stantec without delay.
The Copyrights to all designs and drawings are the property of Stantec. Reproduction or use for any purpose other than that authorized by Stantec is forbidden.

Client/Project Logo

Client/Project

City of San Juan Bautista

SANITARY SEWER FORCE MAIN TO HOLLISTER PROJECT

San Juan Bautista, California

File Name: 31441-D200 | MLM Dwn. | GIA Dsgn. | KM Chkd. | 2022.10.10 YYYY.MM.DD

Title

EXISTING CONTROL BUILDING AND STORAGE BAYS - DEMOLITION PLAN AND DETAIL

Project No. 184031441 | Scale AS SHOWN

Revision 0 | Sheet 13 of 128 | Drawing No. D200

ORIGINAL SHEET - ANSI D
\\<LMDrive>\Projects\184031441\Drawing\Civil\31441-d200 2022.10.10 2:13:38 PM

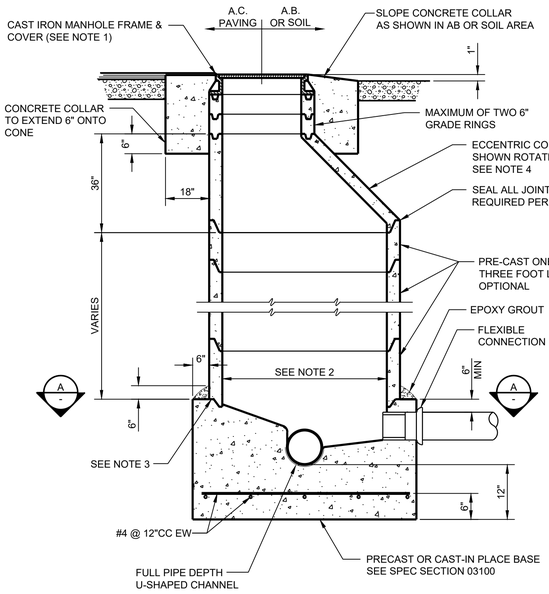

MANHOLE

SCALE: NONE

C101 TYP

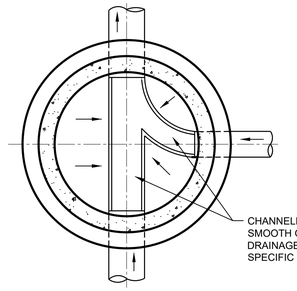

SECTION

SCALE: NONE

A -

NOTES:

1. UNLESS OTHERWISE SPECIFIED, 24"Ø ON 48"Ø MANHOLE, 30"Ø ON 60"Ø MANHOLE CAST IRON MANHOLE FRAME & COVER TOP OF MANHOLE FRAME AND CONCRETE COLLAR TO BE SET 1/4" BELOW FINISHED AC SURFACE, CONCRETE SHALL BE CLASS A IN ACCORDANCE WITH THE SPECIFICATIONS SET FRAME AND COVER IN GROUT.
2. UNLESS NOTED OTHERWISE, 48"Ø FOR 6"-12", 60"Ø FOR 15"-36".
3. CONTRACTOR SHALL FORM GROOVE IN BASE WITH MANUFACTURER'S IMPRESSION RING.
4. LOCATE COVER OVER DOWNSTREAM SIDE OF MANHOLE UNLESS NOTED OTHERWISE.

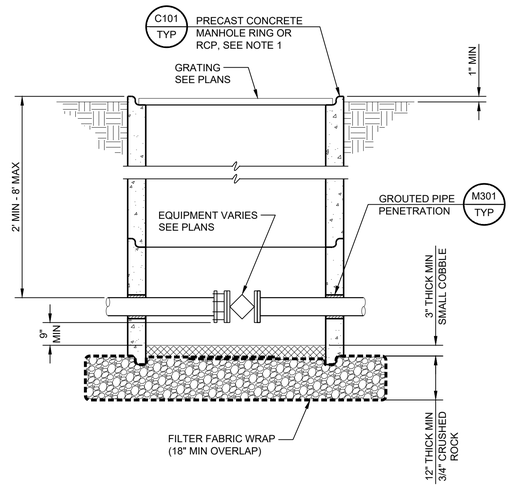

EQUIPMENT ACCESS MANHOLE

SCALE: NONE

C105 TYP

NOTES:

1. MINIMUM INSIDE DIAMETER SHALL BE 4'-0". SEE TYPICAL DETAIL C101 FOR OTHER MANHOLE DETAILS.

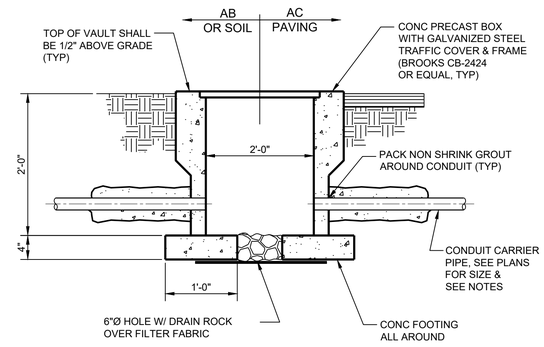

CHEMICAL PULL BOX

SCALE: NONE

C115 TYP

NOTES:

1. CONDUIT SHALL HAVE A NOMINAL COVER OF 18".
2. CONDUITS SHALL BE CONCRETE ENCASED CONTINUOUSLY IN 4" MINIMUM OF CLASS "C" CONCRETE.
3. CONDUIT SHALL NOT SAG MORE THAN 1" PER 100' AND BE SUPPORTED WITH PIPE SUPPORTS (UNDERGROUND DEVICES, INC., MODEL 2W20 OR EQUAL).
4. INSULATE ALL PIPES AND BOXES, IN ACCORDANCE WITH THE SPECIFICATIONS.

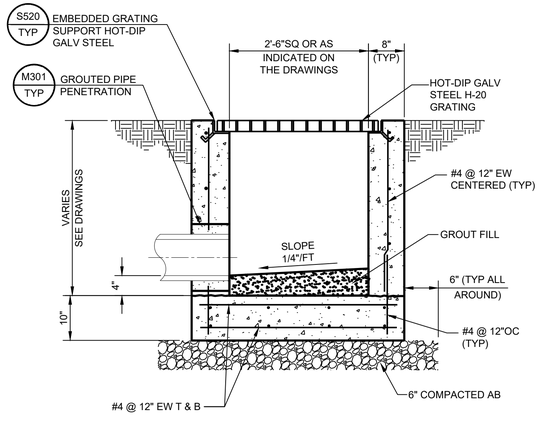

NOTES:

1. TOP OF DROP INLET 1/4" BELOW FINISH GRADE UNLESS INDICATED OTHERWISE ON THE DRAWINGS.
2. DROP INLET MAY BE PRECAST STRUCTURE WITH ENGINEERS APPROVAL.

STANDARD DROP INLET

SCALE: NONE

C120 TYP

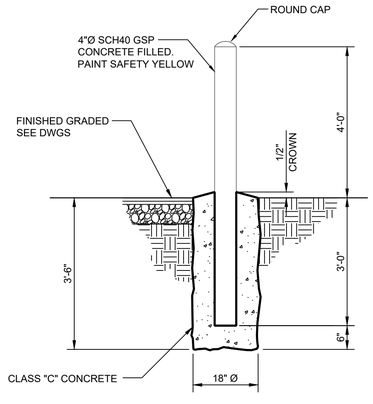

BARRIER POST

SCALE: NONE

C200 TYP

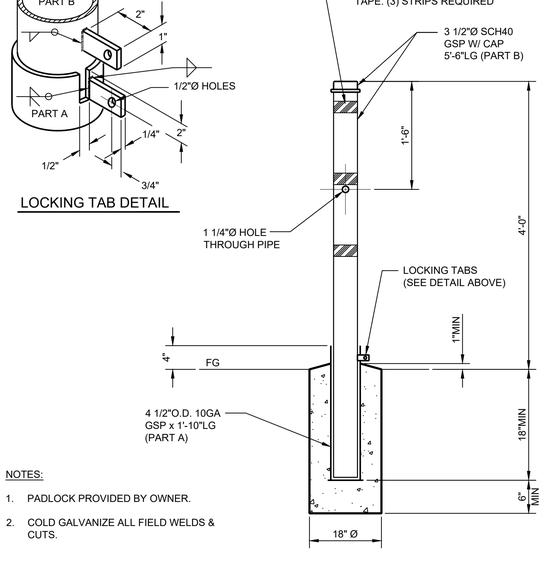

LOCKING TAB DETAIL

NOTES:

1. PADLOCK PROVIDED BY OWNER.
2. COLD GALVANIZE ALL FIELD WELDS & CUTS.

REMOVABLE POST

SCALE: NONE

C206 TYP

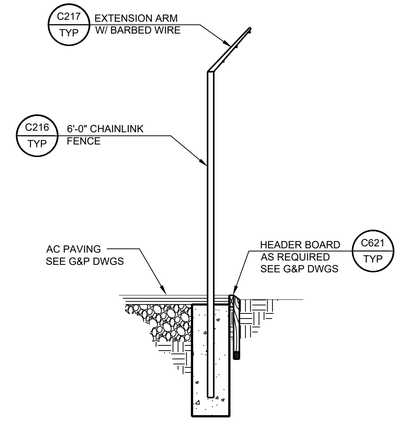

CHAINLINK FENCE IN AC ROADWAY

SCALE: NONE

C211 TYP

Revision	By	Appd.	YY.MM.DD

Issued	By	Appd	YYYY.MM.DD
BID SET	KM	GIA	2022.09.01

Permit/Seal

REGISTERED PROFESSIONAL ENGINEER GABRIEL I. ARONOWITZ No.55607 Exp.12/31/22 CIVIL STATE OF CALIFORNIA

09/01/2022

Consultant

Stantec

Stantec Consulting Services Inc.
3875 Atherton Road
Rocklin CA 95765-3716
Tel: (916) 773-8100
www.stantec.com

Copyright Reserved

The Contractor shall verify and be responsible for all dimensions. DO NOT scale the drawing - any errors or omissions shall be reported to Stantec without delay. The Copyrights to all designs and drawings are the property of Stantec. Reproduction or use for any purpose other than that authorized by Stantec is forbidden.

Client/Project Logo

Client/Project

City of San Juan Bautista

SANITARY SEWER FORCE MAIN TO HOLLISTER PROJECT

San Juan Bautista, California

File Name: 31441-C001 TO C006	ASB	KM	GIA	2022.09.01
	Dwn.	Dsgn.	Chkd.	YYYY.MM.DD

Title

TYPICAL CIVIL DETAILS

Project No.	Scale
184031441	AS SHOWN

Revision	Sheet	Drawing No.
0	14 of 128	C001

ORIGINAL SHEET - ANSI D

\\<LAN>\Active\184031441\cadsurvey\civil\31441-c001 to c006 2022.09.01 15:45:20 PM

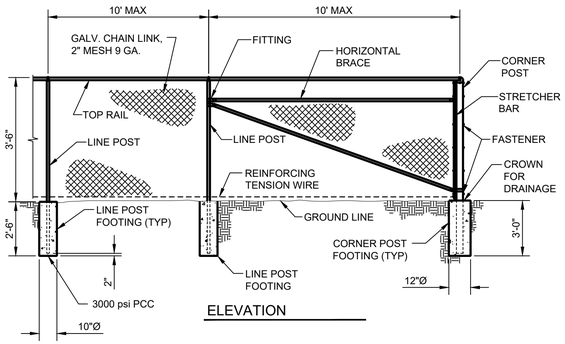

ELEVATION

LOCATION	MIN. SIZE
CORNER	2.351" O.D.
LINE	1.869" O.D.
BRACES	1.625" O.D.
TOP RAIL	1.625" O.D.

NOTES:

1. SHALL MEET MINIMUM REQUIREMENTS OF LATEST CALTRANS STANDARD SPECIFICATIONS.
2. FENCING SHALL BE CHAIN LINK AND SHALL CONSIST OF GALVANIZED CHAINLINK FABRIC ON STEEL POSTS.
   A. ALL POST TOPS SHALL BE FITTED WITH SUITABLE FINIALS.
   B. BRACES SHALL BE SPACED APPROXIMATELY 12" BELOW TOP OF TERMINAL POSTS AND SHALL EXTEND FROM CORNER POSTS TO ADJACENT LINE POSTS.
   C. TOP AND BOTTOM SELVAGES OF THE FENCE SHALL HAVE A TWISTED FINISH.

3'-6" CHAINLINK FENCE (TYPE CL-1.8)

SCALE: NONE — C215 TYP

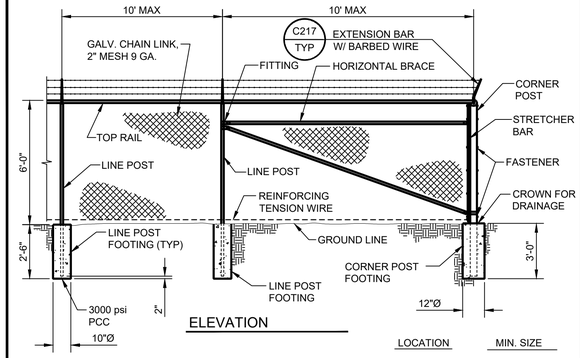

ELEVATION

LOCATION	MIN. SIZE
CORNER	2.351" O.D.
LINE	1.869" O.D.
BRACES	1.625" O.D.
TOP RAIL	1.625" O.D.

NOTES:

1. SHALL MEET MINIMUM REQUIREMENTS OF LATEST CALTRANS STANDARD SPECIFICATIONS.
2. FENCING SHALL BE CHAIN LINK AND SHALL CONSIST OF GALVANIZED CHAIN LINK FABRIC ON STEEL POSTS.
   (A) ALL POST TOPS SHALL BE FITTED WITH SUITABLE FINIALS.
   (B) BRACES SHALL BE SPACED APPROXIMATELY 12" BELOW TOP OF TERMINAL POSTS AND SHALL EXTEND FROM CORNER POSTS TO ADJACENT LINE POSTS.
   (C) TOP AND BOTTOM SELVAGES OF THE FENCE SHALL HAVE A TWISTED AND BARBED FINISH.
   (D) BARBED WIRE, EXTENSION ARMS, AND TOP HORIZONTAL RAILS SHALL BE INSTALLED.

6'-0" CHAINLINK FENCE (TYPE CL-1.8)

SCALE: NONE — C216 TYP

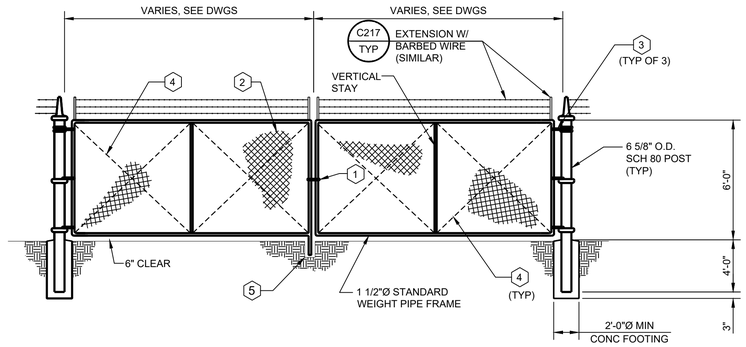

NOTES & TAGS:

1. SHALL MEET REQUIREMENTS OF LATEST CALTRANS STANDARD SPECIFICATIONS.

(1) COMMERCIAL HEAVY DUTY LATCH
(2) 11 GA. CHAIN LINK
(3) 3 HEAVY DUTY HINGES (TYP.)
(4) 1½"Ø DIAGONAL OR 3/8" ROD W/ TURNBUCKLE
(5) GATE LATCH STOP WITH STEEL SLEEVE IN CONCRETE BASE.

CHAINLINK GATE (TYPE CL-1.8)

SCALE: NONE — C219 TYP

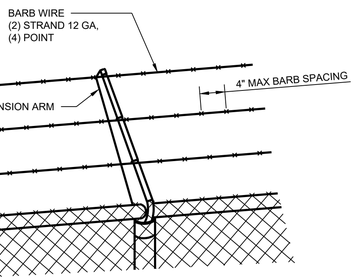

EXTENSION ARM AND BARBED WIRE

SCALE: NONE — C217 TYP

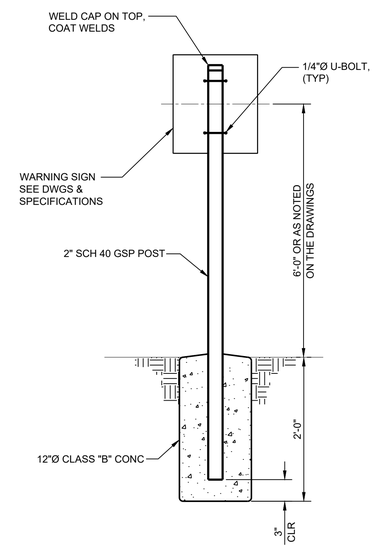

WARNING SIGN

SCALE: NONE — C250 TYP

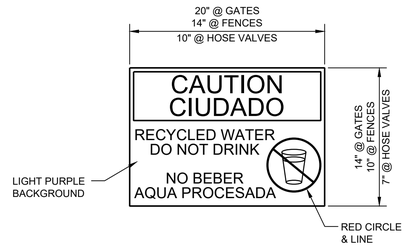

NOTE:

1. INSTALL 20"x14" PLASTIC SIGNS (SETON OR EQUAL) ON ALL GATES
2. INSTALL 14"x10" PLASTIC SIGNS (SETON OR EQUAL) ON FENCES AT 300' INTERVALS ON PERIMETER FENCING AND 500' ON INTERIOR FENCING.
3. INSTALL 10"x 7" PLASTIC SIGN (SETON OR EQUAL) ON 1/8" THICK ALUMINUM BACKING PLATE AT HOSE VALVES. CORNERS ON BACKING LATE SHALL BE ROUNDED, 1/2" RADIUS.

NON-POTABLE WATER WARNING SIGN

SCALE: NONE — C251 TYP

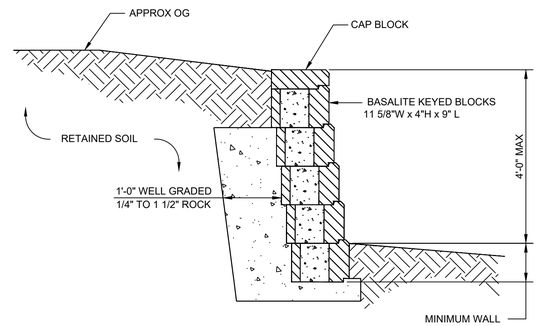

NON-STRUCTURAL RETAINING WALL

SCALE: NONE — C260 TYP

Revision	By	Appd.	YY.MM.DD
BID SET	KM	GIA	2022.09.01
Issued	By	Appd	YYYY.MM.DD

Permit/Seal

REGISTERED PROFESSIONAL ENGINEER — GABRIEL I. ARONOWITZ — No.55807 — Exp.12/31/22 — CIVIL — STATE OF CALIFORNIA

09/01/2022

Consultant

Stantec

Stantec Consulting Services Inc.
3875 Atherton Road
Rocklin CA 95765-3716
Tel: (916) 773-8100
www.stantec.com

Copyright Reserved
The Contractor shall verify and be responsible for all dimensions. DO NOT scale the drawing - any errors or omissions shall be reported to Stantec without delay.
The Copyrights to all designs and drawings are the property of Stantec. Reproduction or use for any purpose other than that authorized by Stantec is forbidden.

Client/Project Logo

Client/Project

City of San Juan Bautista

SANITARY SEWER FORCE MAIN TO HOLLISTER PROJECT

San Juan Bautista, California

File Name: 31441-C001 TO C006	ASB	KM	GIA	2022.09.01
	Dwn.	Dsgn.	Chkd.	YYYY.MM.DD

Title

TYPICAL CIVIL DETAILS

Project No.	Scale
184031441	AS SHOWN
Revision	Sheet / Drawing No.
0	15 of 128 — C002

ORIGINAL SHEET - ANSI D

\\<LAN Path>\ca-hfs01\441\c\drawing\cad\31441-C001 to C006 2022.10.05 1:43:47 PM

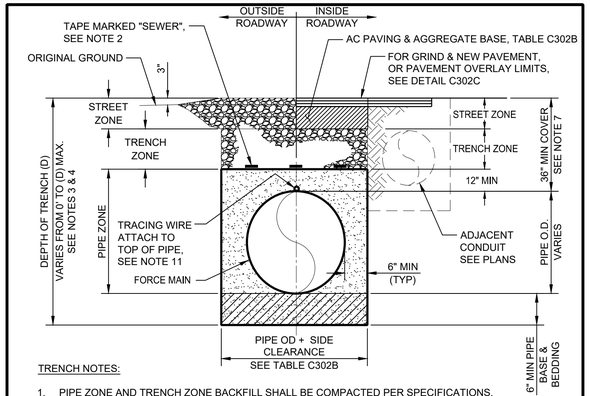

TRENCH NOTES:

1. PIPE ZONE AND TRENCH ZONE BACKFILL SHALL BE COMPACTED PER SPECIFICATIONS.
2. (1) STRAND FOR 3/4"-12", (2) STRANDS 14"-30", (3) STRANDS >30".
3. ALL EXCAVATIONS SHALL COMPLY WITH APPLICABLE LOCAL, STATE, AND FEDERAL SAFETY REGULATIONS INCLUDING CURRENT OSHA EXCAVATION AND TRENCH SAFETY STANDARDS. RESULTS OF THE PRELIMINARY FIELD INVESTIGATIONS ARE INCLUDED IN CONTRACT SPECIFICATIONS.
4. CONTRACTOR TO DETERMINE ACCEPTABLE TRENCH SIDE SLOPES, IN ACCORDANCE WITH OSHA REQUIREMENTS.
5. FOR BACKFILL MATERIAL REQUIREMENTS, SEE SPECS. PONDING OR JETTING IS NOT AN ACCEPTABLE MEANS OF COMPACTION.
6. TYPICAL PIPE TRENCH DETAIL SHALL BE UTILIZED UNLESS NOTED OTHERWISE.
7. MINIMUM COVER OF 36" REQUIRED UNLESS SHOWN OTHERWISE.
8. STREET ZONE SHALL MATCH EXISTING SECTION OR AS SHOWN IN C302B, WHICHEVER IS GREATER.
9. LOCATING WIRE SHALL BE SOLID INSULATED, #10 AWG COPPER WIRE, SOFT DRAWN.
10. CEMENT SLURRY PIPE ZONE BACKFILL REQUIRED IN ALL EMBANKMENTS.
11. PROVIDE A VALVE BOX EVERY 500 FEET FOR TRACER WIRE ACCESS.
12. TRENCH SHIELD SHALL NOT DISTURB BEDDING BELOW TOP OF PIPE, TRENCH SHALL BE "BENCHED" FOR SHIELD.

TYPICAL FORCE MAIN TRENCH SECTION

SCALE: NONE — C302 TYP

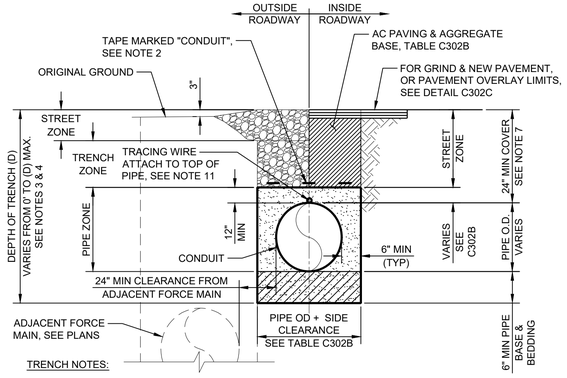

TRENCH NOTES:

1. PIPE ZONE AND TRENCH ZONE BACKFILL SHALL BE COMPACTED PER SPECIFICATIONS.
2. (1) STRAND FOR 3/4"-12", (2) STRANDS 14"-30", (3) STRANDS >30".
3. ALL EXCAVATIONS SHALL COMPLY WITH APPLICABLE LOCAL, STATE, AND FEDERAL SAFETY REGULATIONS INCLUDING CURRENT OSHA EXCAVATION AND TRENCH SAFETY STANDARDS. RESULTS OF THE PRELIMINARY FIELD INVESTIGATIONS ARE INCLUDED IN CONTRACT SPECIFICATIONS.
4. CONTRACTOR TO DETERMINE ACCEPTABLE TRENCH SIDE SLOPES, IN ACCORDANCE WITH OSHA REQUIREMENTS.
5. FOR BACKFILL MATERIAL REQUIREMENTS, SEE SPECS. PONDING OR JETTING IS NOT AN ACCEPTABLE MEANS OF COMPACTION.
6. TYPICAL PIPE TRENCH DETAIL SHALL BE UTILIZED UNLESS NOTED OTHERWISE.
7. MINIMUM COVER OF 24" REQUIRED UNLESS SHOWN OTHERWISE.
8. STREET ZONE SHALL MATCH EXISTING SECTION OR AS SHOWN IN C302B, WHICHEVER IS GREATER.
9. LOCATING WIRE SHALL BE SOLID INSULATED, #10 AWG COPPER WIRE, SOFT DRAWN.
10. CEMENT SLURRY PIPE ZONE BACKFILL REQUIRED IN ALL EMBANKMENTS.
11. PROVIDE A PULL BOX EVERY 500 FEET FOR TRACER WIRE ACCESS.
12. TRENCH SHIELD SHALL NOT DISTURB BEDDING BELOW TOP OF PIPE, TRENCH SHALL BE "BENCHED" FOR SHIELD.

TYPICAL CONDUIT TRENCH SECTION

SCALE: NONE — C302A TYP

Location (Specific areas identified are where the pipe is in the roadway. See shoulder requirements when outside of roadways.)		Overlay [1]	Street Zone [2] [4]	Trench Zone	Pipe Zone / Base & Bedding	Side Clearance
SJB WWTP [5]		None	3.0 inch AC 12.0 inch Class II AB (95% compaction)	Sandy Material with a Sand Equivalent Minimum of 30 (90% compaction)	Crushed AB material or crushed miscellaneous base material of fine gradation (90% compaction)	6 inches with an approved cement or soil slurry backfill or 10 inches with a compacted approved native or AB backfill
Rancho Vista Development	SJB WWTP through intersection of Third St and Lavagnino Dr	None	4.0 inch AC 16.0 inch Class II AB (95% compaction)	Sandy Material with a Sand Equivalent Minimum of 30 (90% compaction)	Crushed AB material or crushed miscellaneous base material of fine gradation (90% compaction)	6 inches with an approved cement or soil slurry backfill or 10 inches with a compacted approved native or AB backfill
	Intersection of Third St and Lavagnino Dr to intersection of Rancho Way and Caetano Place	None	4.0 inch AC 12.0 inch Class II AB (95% compaction)			
	Caetano Place	None	4.0 inch AC 8.0 inch Class II AB (95% compaction)			
San Juan Highway/First Street [6]		3.0 inch AC [3]	1.8 inch AC 13.8 inch Class II AB (95% compaction)	Approved screened native (95% compaction)	Crushed AB material or crushed miscellaneous base material of fine gradation (95% compaction)	6 inches with an approved cement or soil slurry backfill or 10 inches with a compacted approved native or AB backfill
Prescott/San Justo Road		3.0 inch AC [3]	1.0 inch AC 12.0 inch Class II AB (95% compaction)	Approved screened native (95% compaction)	Crushed AB material or crushed miscellaneous base material of fine gradation (95% compaction)	6 inches with an approved cement or soil slurry backfill or 10 inches with a compacted approved native or AB backfill
Lucy Brown Lane, Duncan Avenue, Bixby Road, Freitas Road, and Mitchell Road (to end of existing paved section near End of County Road sign)		3.0 inch AC [3]	12.0 inch Class II AB (95% compaction)	Approved screened native (95% compaction)	Crushed AB material or crushed miscellaneous base material of fine gradation (95% compaction)	6 inches with an approved cement or soil slurry backfill or 10 inches with a compacted approved native or AB backfill
Shoulder		None	12.0 inch Class II AB (95% compaction)	Approved screened native (95% compaction)	Crushed AB material or crushed miscellaneous base material of fine gradation (95% compaction)	6 inches with an approved cement or soil slurry backfill or 10 inches with a compacted approved native or AB backfill

NOTES:

1. AS SHOWN IN C302, THE INTENT IS FOR THE AC OVERLAY TO EXTEND FROM THE EDGE OF PAVEMENT TO EDGE OF PAVEMENT WHEN INSTALLING IN THE ROADWAY. BIDDING DOCUMENTS INCLUDE OPTIONAL DEDUCTIVE ITEMS TO REDUCE THE OVERLAY TO EITHER A ONE LANE OVERLAY OR REMOVE THE OVERLAY COMPLETELY. IF THE TWO LANE OVERLAY IS NOT PROVIDED, A GRIND IS REQUIRED SUCH THAT THE NEW PAVEMENT ELEVATIONS MATCH THE REMOVED LANE ELEVATIONS.
2. IF THE OVERLAY IS REMOVED COMPLETELY, THE AC SHALL EXTEND FROM THE EDGE OF PAVEMENT IN THE RESPECTIVE LANE TO 1 FT BEYOND THE EDGE OF TRENCH TOWARDS THE ROAD CENTERLINE (I.E., T TRENCH). NO SLIVER OF EXISTING PAVEMENT SHALL BE ALLOWED TO REMAIN BETWEEN THE T TRENCH AND THE EDGE OF ROAD.
3. IF THE OVERLAY IS REMOVED COMPLETELY AND THE T TRENCH INSTALLED, 3 INCHES OF AC MUST BE ADDED TO THE STREET ZONE FOR THE IDENTIFIED ROADS.
4. STREET ZONE SHALL BE AS SHOWN OR MATCH EXISTING SECTION, WHICHEVER IS GREATER. FINAL STREET ZONE DEPTH SHALL BE DETERMINED DURING CONSTRUCTION.
5. PAVEMENT REPLACEMENT SHALL EXTEND TO A CLEAN SAW CUT EDGE OF EXISTING PAVEMENT; IT DOES NOT NEED TO EXTEND BEYOND THE TRENCH IF THE SAW CUT EDGE FOR THE TRENCH IS ACCEPTABLE.
6. REMOVE AND REPLACE AC CURB ON WESTERN EDGE, AS REQUIRED, PER COUNTY STANDARDS.

TYPICAL PIPE TRENCH SECTION

SCALE: NONE — C302B TYP

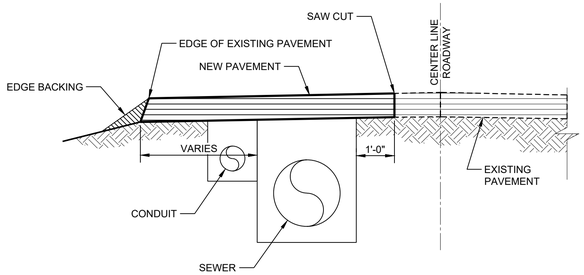

T-TRENCH NOTES:

1. SAW CUT ALL EXISTING PAVEMENT EDGES.
2. NEW PAVEMENT SHALL MATCH ELEVATIONS OF EXISTING PAVEMENT. GRIND AND REMOVE EXISTING PAVEMENT TO BE REPLACED.
3. T-TRENCH PAVEMENT SHALL EXTEND FROM EDGE OF EXISTING PAVEMENT TO ONE FOOT MINIMUM BEYOND TRENCH. NO SLIVER OF EXISTING PAVEMENT SHALL BE ALLOWED TO REMAIN BETWEEN THE EDGE OF TRENCH AND EDGE OF PAVEMENT (EDGE OF EXISTING ROAD) IN THE RESPECTIVE LANE
4. STRIPING SHALL INCLUDE ONE FOG LINE, STOP BARS, AND CROSS WALKS FROM EDGE OF NEW PAVEMENT TO EDGE OF EXISTING PAVEMENT.

T-TRENCH

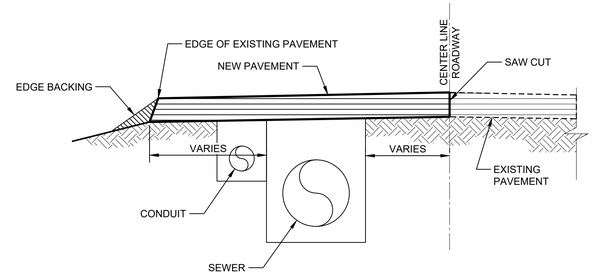

ONE LANE PAVEMENT REPLACEMENT NOTES:

1. SAW CUT ALL EXISTING PAVEMENT EDGES.
2. NEW PAVEMENT SHALL MATCH ELEVATIONS OF EXISTING PAVEMENT. GRIND AND REMOVE EXISTING PAVEMENT TO BE REPLACED.
3. NEW PAVEMENT SHALL EXTEND FROM EDGE OF EXISTING PAVEMENT TO THE EXISTING ROAD CENTERLINE.
4. STRIPING SHALL INCLUDE ONE FOG LINE, CENTERLINE, STOP BARS AND CROSS WALKS FROM EDGE OF NEW PAVEMENT TO EDGE OF EXISTING PAVEMENT.
5. LANE WITH PAVEMENT REPLACEMENT WILL VARY WITH THE FORCE MAIN LOCATION. SEE PLANS

ONE LANE PAVEMENT REPLACEMENT

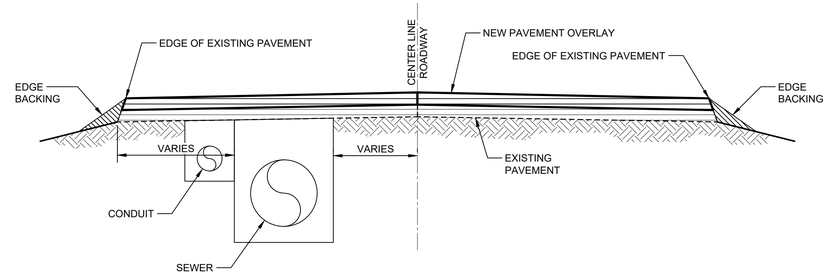

TWO LANE PAVEMENT OVERLAY NOTES:

1. CONTOUR GRIND AT OVERLAY LONGITUDINAL TERMINUS OVER 20 FEET MINIMUM TO ENSURE A SMOOTH TRANSITION FROM EXISTING PAVEMENT TO NEW OVERLAY.
2. OVERLAY SHALL EXTEND FROM EDGE OF EXISTING PAVEMENT TO EDGE OF EXISTING PAVEMENT
3. STRIPING SHALL INCLUDE TWO FOG LINES, CENTERLINE, STOP BARS AND CROSS WALKS FROM EDGE OF NEW PAVEMENT TO EDGE OF NEW PAVEMENT.

TWO LANE PAVEMENT OVERLAY

TYPICAL NOTES FOR ALL THREE PROFILES:

1. ONLY ONE PAVEMENT ARRANGEMENT WILL APPLY TO THE PROJECT DEPENDING ON THE BID OPTION AND CONTRACT AWARD.
2. DETAILS ARE REVERSIBLE DEPENDING ON LANE IN WHICH THE FORCE MAIN IS LOCATED. SEE PLANS.

GRIND & NEW PAVEMENT OR PAVEMENT OVERLAY LIMITS PROFILES

SCALE: NONE — C302C TYP

Revision	By	Appd.	YY.MM.DD
BID SET	KM	GIA	2022.12.30
PERMIT SET	KM	GIA	2022.10.10
Issued	By	Appd	YYYY.MM.DD

Permit/Seal

REGISTERED PROFESSIONAL ENGINEER — GABRIEL I. ARONOW — No.55607 — Exp.12/31/24 — CIVIL — STATE OF CALIFORNIA

12/30/2022

Consultant

Stantec

Stantec Consulting Services Inc.
3875 Atherton Road
Rocklin CA 95765-3716
Tel: (916) 773-8100
www.stantec.com

Copyright Reserved

The Contractor shall verify and be responsible for all dimensions. DO NOT scale the drawing - any errors or omissions shall be reported to Stantec without delay. The Copyrights to all designs and drawings are the property of Stantec. Reproduction or use for any purpose other than that authorized by Stantec is forbidden.

Client/Project Logo

Client/Project

City of San Juan Bautista

SANITARY SEWER FORCE MAIN TO HOLLISTER PROJECT

San Juan Bautista, California

File Name: 31441-C001 TO C006	ASB	KM	GIA	2022.12.30
	Dwn.	Dsgn.	Chkd.	YYYY.MM.DD

Title

TYPICAL CIVIL DETAILS

Project No. 184031441

Scale AS SHOWN

Revision 0

Sheet 16 of 128

Drawing No. C003

I:\1Mkfc.pw\civil\184031441\dwg\dgn\31441-c001 to c006 2022.12.07 7:14:53 AM

ORIGINAL SHEET - ANSI D

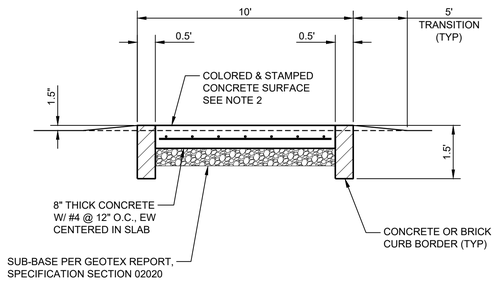

SECTION

NOTES:

1. ROUGHEN EXISTING CONCRETE ABUTTING REPAIR AREAS TO 1/4" AMPLITUDE AND COAT WITH EPOXY BONDING AGENT.
2. REPAIRED AREA SHALL MATCH EXISTING IN ELEVATION, COLOR AND PATTERN AS APPROVED BY THE ENGINEER.

REPAIRED RAISED CROSSWALK DETAIL

SCALE: NONE

C303 TYP

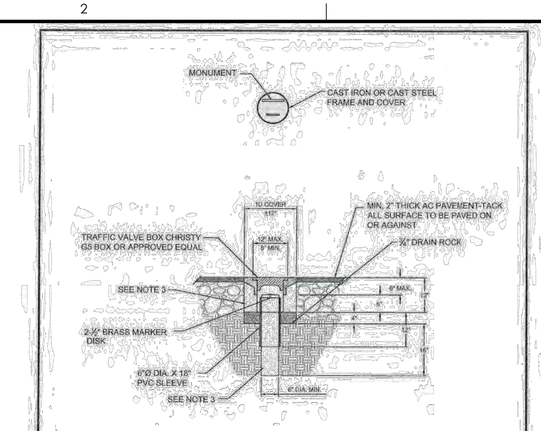

NOTES:
1. THE CONFIGURATION OF THE CAST IRON OR CAST STEEL FRAME AND COVER MAY VARY FROM THAT SHOWN.
2. FRAME SHALL BE EMBEDDED IN CONCRETE A MINIMUM OF 3".
3. CONCRETE COLLAR SHALL BE CLASS 520-C-2500.
4. COVER TO BE CAST WITH WORDS "MONUMENT".
5. SURVEYOR SHALL SUPPLY DISC WITH REGISTRATION OF CIVIL ENGINEER OR LAND SURVEYOR NUMBER TO CONTRACTOR PRIOR TO INSTALLATION.

LINE:

SURVEY MONUMENT

DRAWN BY: STAFF	SCALE: NONE	APPROVED:	STANDARD PLAN
REVIEWED BY: DANNY HOLLSTOCK	REVISED: OCTOBER, 2019		A-16
CITY OF HOLLISTER ENGINEERING DEPARTMENT		CITY ENGINEER, DANNY HOLLSTOCK, RCE 50744 — DATE: 11-5-19	24X36 (1:0.5)

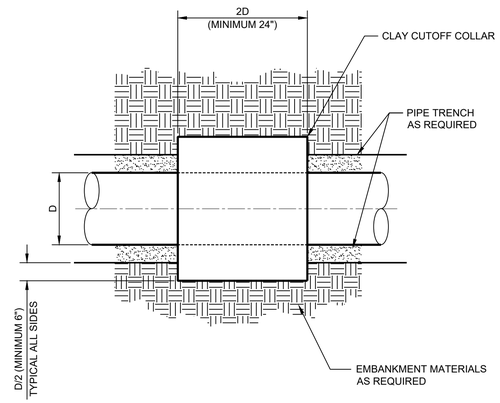

NOTES:

1. CLAY CUTOFF COLLAR SHALL BE INSTALLED ON ALL PIPE LINES IN EMBANKMENTS FOR WATER CONTAINING STRUCTURES.

TYPICAL CUTOFF WALL

SCALE: NONE

C305 TYP

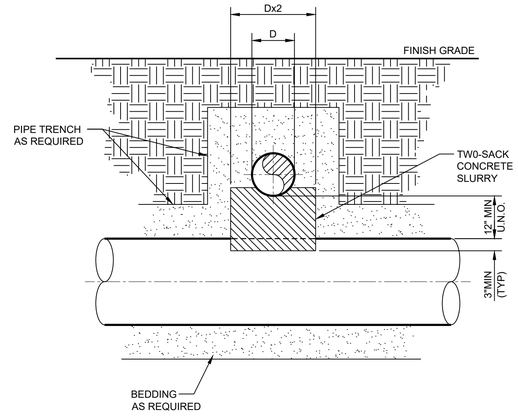

UTILITY PIPE CROSSING

SCALE: NONE

C307 TYP

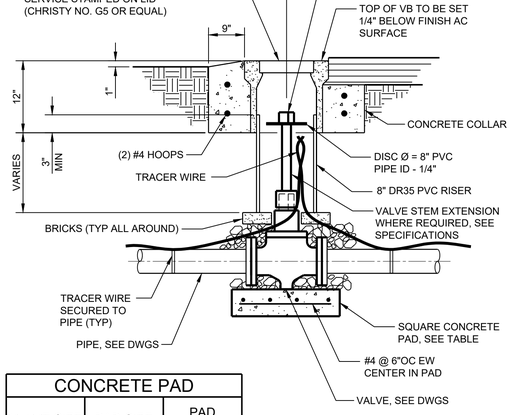

CONCRETE PAD		
VALVE SIZE	PAD SIZE	PAD THICKNESS
3"-16"	24"	6"
18"-30"	36"	6"
36"-48"	48"	8"
54"-60"	60"	8"

NOTE: FOR FORCE MAIN INSTALL CARSONITE STAKE INDICATING "SAN JUAN BAUTISTA FORCE MAIN VALVE" LOCATED OFFSET FROM VALVE IN SHOULDER, AS APPROVED BY ENGINEER.

TYPICAL BURIED VALVE

SCALE: NONE

C500 TYP

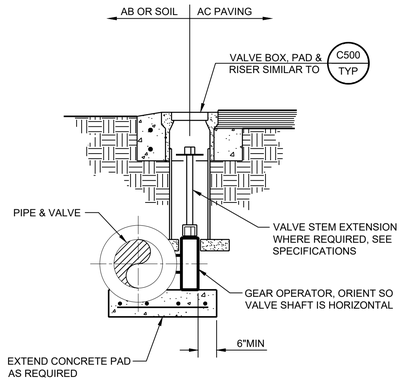

NOTE: FOR FORCE MAIN INSTALL CARSONITE STAKE INDICATING "SAN JUAN BAUTISTA FORCE MAIN VALVE" LOCATED OFFSET FROM VALVE IN SHOULDER, AS APPROVED BY ENGINEER.

BURIED VALVE WITH GEAR OPERATOR

SCALE: NONE

C501 TYP

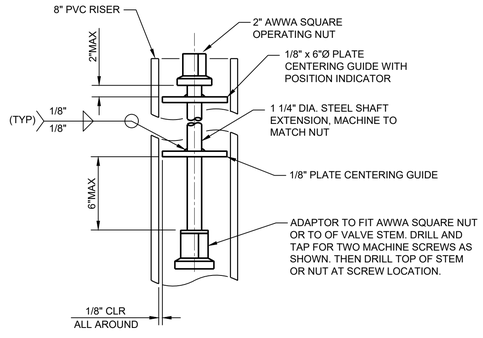

OPERATING NUT EXTENSION

SCALE: NONE

C502 TYP

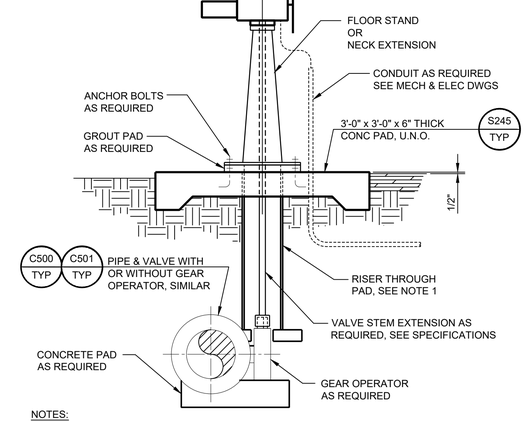

NOTES:

1. VALVE BOX IS NOT REQUIRED AT THE SLAB. THE RISER ONLY MAY PENETRATE THE SLAB, PER TYPICAL DETAIL M303.
2. PROVIDE BARRIER POSTS, PER TYPICAL DETAIL C200, ADJACENT TO VALVE AS DIRECTED BY THE ENGINEER OR AS SHOWN ON THE DRAWINGS.

BURIED VALVE WITH ABOVE GROUND OPERATOR

SCALE: NONE

C505 TYP

Revision	By	Appd.	YY.MM.DD

BID SET / Issued	KM By	GIA Appd	2022.09.01 YYYY.MM.DD

Permit/Seal

REGISTERED PROFESSIONAL ENGINEER — GABRIEL T. ARONOWITZ — No. 55607 — Exp.12/31/22 — CIVIL — STATE OF CALIFORNIA

09/01/2022

Consultant

Stantec

Stantec Consulting Services Inc.
3875 Atherton Road
Rocklin CA 95765-3716
Tel: (916) 773-8100
www.stantec.com

Copyright Reserved

The Contractor shall verify and be responsible for all dimensions. DO NOT scale the drawing - any errors or omissions shall be reported to Stantec without delay. The Copyrights to all designs and drawings are the property of Stantec. Reproduction or use for any purpose other than that authorized by Stantec is forbidden.

Client/Project Logo

Client/Project

City of San Juan Bautista

SANITARY SEWER FORCE MAIN
TO HOLLISTER PROJECT

San Juan Bautista, California

File Name: 31441-C001 TO C006	ASB Dwn.	KM Dsgn.	GIA Chkd.	2022.09.01 YYYY.MM.DD

Title

TYPICAL CIVIL DETAILS

Project No.	Scale
184031441	AS SHOWN
Revision	Sheet
0	17 of 128

Drawing No.

C004

ORIGINAL SHEET - ANSI D

v:\1840\active\184031441\drawing\sct\31441-C001 to c004 2022.10.07 2:00:38 PM

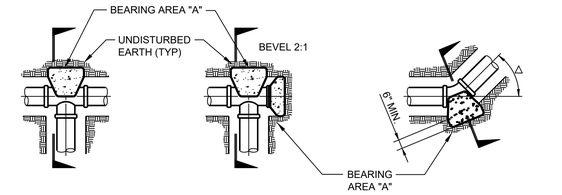

PLAN (TYPE - 1)

PLAN (TYPE - 2)

PLAN (TYPE - 3) (HORIZ. BEND)

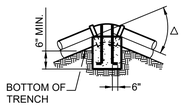

PLAN (TYPE - 4) (VERT, BEND)

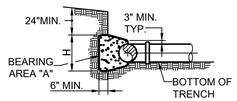

SECTION

THRUST BLOCKS SCHEDULE

PIPE DIA. (in.)	TEST PESSURE (P.S.I.)	THRUST BLOCK BEARING AREA "A" (S.F.) / ANCHOR BLOCK VOL. OF CONCRETE (C.Y.)				
		△ 90°	△ 45°	△ 22.5°	△ 11.25°	TEE OR BULKHEAD
8"	10	0.5 / 0.16	0.3 / 0.10	0.1 / 0.03	0.1 / 0.03	0.3 / 0.10
10"	10	0.8 / 0.26	0.4 / 0.13	0.2 / 0.07	0.1 / 0.03	0.5 / 0.16
12"	10	1.1 / 0.36	0.6 / 0.19	0.3 / 0.10	0.2 / 0.07	0.8 / 0.26
14"	10	1.5 / 0.48	0.8 / 0.26	0.4 / 0.13	0.2 / 0.07	1.1 / 0.36
16"	10	2.0 / 0.65	1.1 / 0.37	0.5 / 0.17	0.3 / 0.10	1.4 / 0.47
18"	10	2.5 / 0.83	1.4 / 0.47	0.7 / 0.23	0.3 / 0.10	1.8 / 0.60
20"	10	3.1 / 1.00	1.7 / 0.57	0.9 / 0.29	0.4 / 0.13	2.2 / 0.73
24"	10	4.4 / 1.42	2.4 / 0.77	1.2 / 0.39	0.6 / 0.19	3.1 / 1.00
30"	10	6.9 / 2.23	3.8 / 1.23	1.9 / 0.61	1.0 / 0.33	4.9 / 1.58
36"	10	10.0 / 3.23	5.4 / 1.74	2.8 / 0.90	1.4 / 0.45	7.1 / 2.30
42"	10	13.6 / 4.39	7.4 / 2.39	3.8 / 1.23	1.9 / 0.61	9.6 / 3.10

REBAR SIZES

PIPE SIZE	△	REBAR
6"-10"	0-90°	#5
12"-20"	0-225°	#5
24"	0-225°	#6
12"-20"	45°	#7
12"-16"	90°	#8

SEE NOTE 4

NOTES:

1. THRUST BLOCKS ARE ONLY ALLOWED AT LOCATIONS SPECIFIED BY PIPE SERVICE OR AS APPROVED BY THE ENGINEER. PIPE TEST PRESSURE LESS THAN OR EQUAL TO 10 psi DO NOT REQUIRE RESTRAINT, TEST PRESSURE GREATER THAN 10 psi REQUIRE RESTRAINT. AREAS GIVEN ARE FOR 10 psi, ADJUST AREAS ACCORDING TO TEST PRESSURE. SEE SPECIFICATION SECTION 15010.
2. BLOCKS TO BE POURED AGAINST UNDISTURBED SOIL.
3. JOINTS AND FACE OF PLUGS SHALL BE KEPT CLEAN OF CONCRETE.
4. COAT REBAR WITH TWO COATS OF KOPPERS 505, TNEMEC 46-450, OR EQUAL, 15 MILS EACH COAT

TYPICAL THRUST BLOCK

SCALE: NONE

C507 TYP

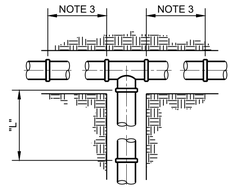

PLAN

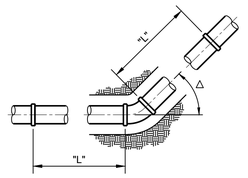

PLAN

RESTRAINED LENGTH SCHEDULE

PIPE DIA. (in.)	TEST PESSURE (P.S.I.)	LENGTH "L" (FT)				
		△ 45°	△ 90°	TEE RUN	TEE BRANCH	REDUCER
4	100	6	14	NOTE 4	36	
6	100	8	19	NOTE 4	54	
8	100	10	25	NOTE 4	74	
10	100	12	30	NOTE 4	79	
12	100	14	35	NOTE 4	97	64 (12"x 8")
14	100	16	39	NOTE 4	112	
16	100	18	44	NOTE 4	119	
18	100	20	48	NOTE 4	124	93 (18"x 12)
20	100	22	52	NOTE 4	139	
24	100	25	60	NOTE 4	168	

NOTES:

1. THRUST BLOCKS ARE NOT ALLOWED FOR PIPE AND FITTING RESTRAINT. PIPE JOINTS AND FITTINGS SHALL BE RESTRAINED A MINIMUM LENGTH AS SHOWN IN THE ABOVE TABLE.
2. PIPE TEST PRESSURES LESS THAN OR EQUAL TO 10 PSI DO NOT REQUIRE RESTRAINT; TEST PRESSURE GREATER THAN 10 PSI REQUIRE RESTRAINT. LENGTHS GIVEN ABOVE ARE FOR 100 PSI. ADJUST LENGTHS ACCORDING TO TEST PRESSURE (EG. FOR 150 PSI-MULTIPLY SCHEDULE LENGTH VALUES BY 1.5). SEE SPECIFICATION SECTION 15010 FOR TEST PRESSURES.
3. CONTRACTOR SHALL INSTALL ONE FULL LENGTH PIPE EITHER SIDE OF TEE RUN.
4. TEE RUN RESTRAINT SHALL BE PER FITTING ADJACENT TO TEE AS REQUIRED.

PIPE RESTRAINED LENGTH SCHEDULE

SCALE: NONE

C508 TYP

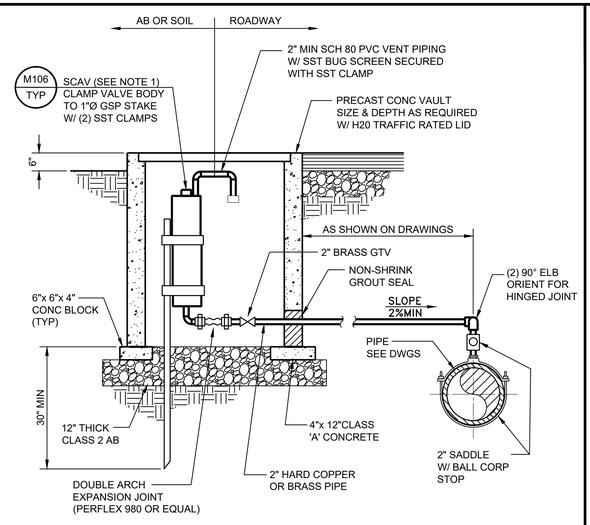

NOTES:

1. 2-INCH SCAV A.R.I. D-26 EQUIPPED WITH NON-SLAM OPTION, OR EQUAL.

BURIED SEWAGE COMBINATION AIR VALVE

SCALE: NONE

C529 TYP

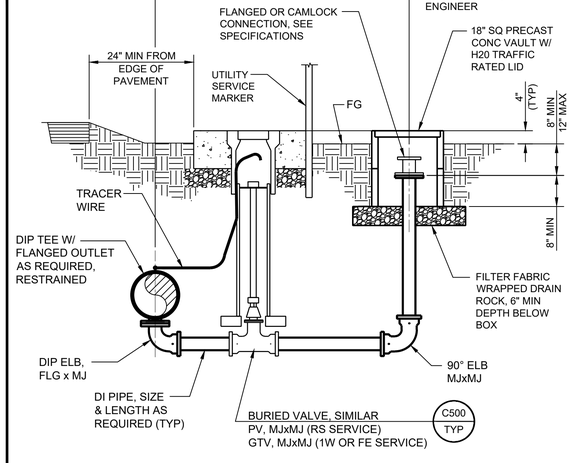

NOTES:

1. ALL PIPE SHALL BE DUCTILE IRON WITH RESTRAINED JOINTS.

4" BLOW-OFF VALVE

SCALE: NONE

C531 TYP

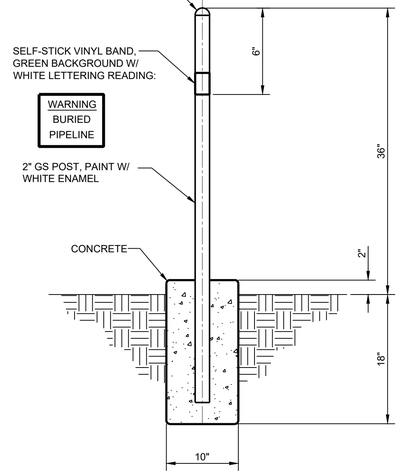

PIPELINE MARKER

SCALE: NONE

C540 TYP

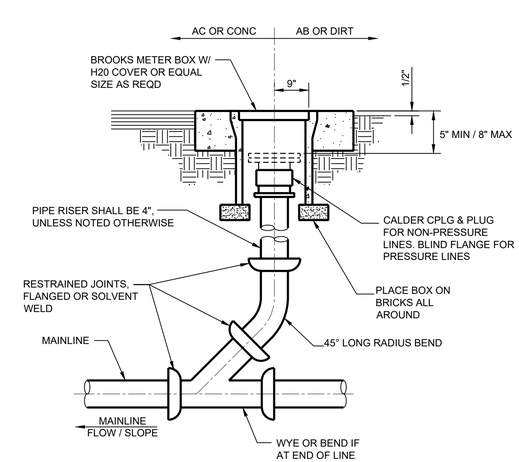

CLEANOUT

SCALE: NONE

C550 TYP

Revision	By	Appd.	YY.MM.DD

Issued	By	Appd	YYYY.MM.DD
BID SET	KM	GIA	2022.12.10
PERMIT SET	KM	GIA	2022.10.10

Permit/Seal

REGISTERED PROFESSIONAL ENGINEER GABRIEL I. ARONOW No.55607 Exp.12/31/22 CIVIL STATE OF CALIFORNIA

12/10/2022

Consultant

Stantec

Stantec Consulting Services Inc.
3875 Atherton Road
Rocklin CA 95765-3716
Tel: (916) 773-8100
www.stantec.com

Copyright Reserved

The Contractor shall verify and be responsible for all dimensions. DO NOT scale the drawing - any errors or omissions shall be reported to Stantec without delay. The Copyrights to all designs and drawings are the property of Stantec. Reproduction or use for any purpose other than that authorized by Stantec is forbidden.

Client/Project Logo

Client/Project

City of San Juan Bautista

SANITARY SEWER FORCE MAIN TO HOLLISTER PROJECT

San Juan Bautista, California

File Name: 31441-C001 TO C006	ASB	KM	GIA	2022.12.10
	Dwn.	Dsgn.	Chkd.	YYYY.MM.DD

Title

TYPICAL CIVIL DETAILS

Project No.	Scale
184031441	AS SHOWN
Revision 0	Sheet 18 of 128
	Drawing No. C005

ORIGINAL SHEET - ANSI D

v:\1842\active\184031441\drawing\sct\31441-c001 to c004 2022.11.22 4:20:34 PM

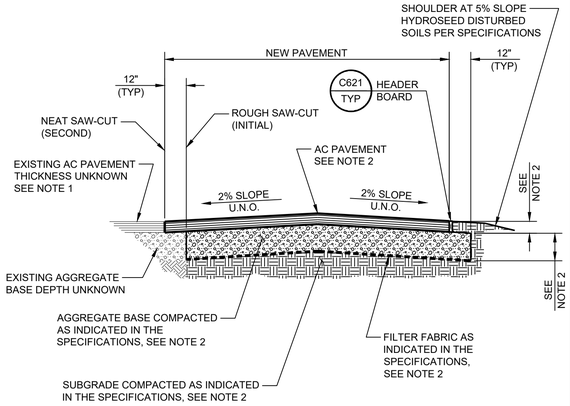

NOTES:

1. SLURRY SEAL PER SPECIFICATION 02513 SHALL EXTEND 2'-0" ONTO EXISTING PAVEMENT.
2. FOR THICKNESS OF NEW AB & AC AND COMPACTION REQUIREMENTS, SEE SPEC SECTION 02513 AND TYPICAL DETAIL C302B.

ASPHALT CONCRETE ROADWAY

SCALE: NONE — C600 TYP

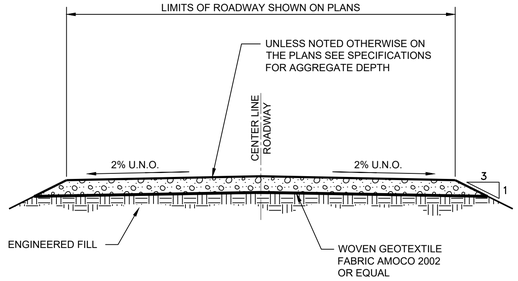

AGGREGATE BASE ROADWAY

SCALE: NONE — C605 TYP

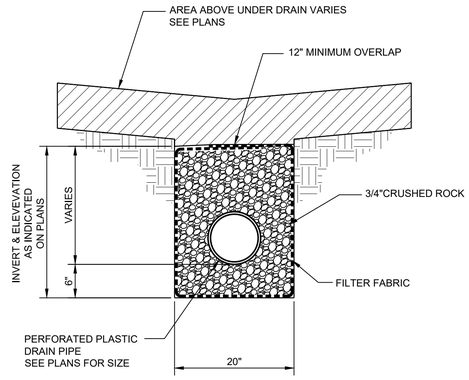

UNDER DRAIN

SCALE: NONE — C613 TYP

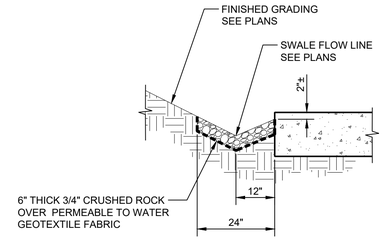

DRAINAGE SWALE

SCALE: NONE — C615 TYP

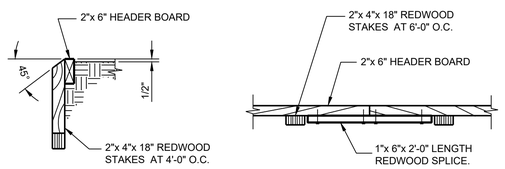

SECTION AT LANDSCAPED AREA

SPLICE DETAIL PLAN

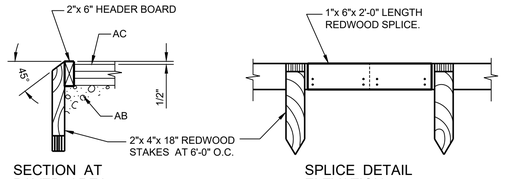

SECTION AT PAVED AREA

SPLICE DETAIL ELEVATION

HEADER BOARD NOTES:

1. INSTALL ALL STAKES AND SPLICES ON PLANTING SIDE OF HEADER BOARD.
2. ALL FASTENERS SHALL BE GALVANIZED WOODSCREWS.
3. ALL HEADER BOARD LUMBER SHALL BE COMMINGLED RECYCLED PLASTIC LUMBER. ALL STAKE AND SPLICE LUMBER SHALL BE REDWOOD, ROUGH CONSTRUCTION HEART GRADE IN ACCORDANCE TO CALIFORNIA REDWOOD ASSOCIATION GRADING RULES.

HEADER BOARD - RECYCLED PLASTIC

SCALE: NONE — C621 TYP

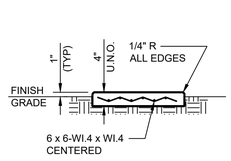

TYPICAL SECTION

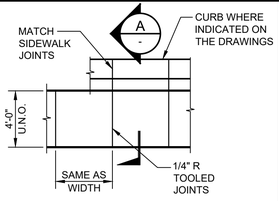

TYPICAL PLAN

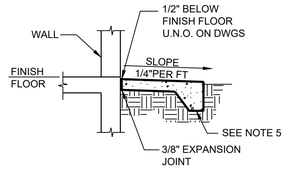

SECTION AT BUILDING

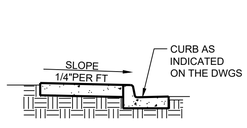

SECTION A

NOTES:

1. EXPANSION JOINTS SHALL BE INSTALLED AT END OF CONCRETE PLACEMENT, AT POINTS OF CURVATURE, AT STRUCTURES, AND AT MAXIMUM DISTANCE NOT TO EXCEED 100 FEET. EXPANSION JOINTS SHALL BE 3/4" THICK. TOOL EDGES 1/4" RADIUS.
2. CONTRACTION JOINTS SHALL BE INSTALLED AT A MAXIMUM SPACING OF 10 FT.
3. ELEVATIONS SHALL BE AS INDICATED ON THE DRAWINGS.
4. PROVIDE LIGHT BROOM SURFACE FINISH.
5. THICKNESS VARIES 8"-12" AS REQUIRED FOR STEP.

CONCRETE SIDEWALK

SCALE: NONE — C645 TYP

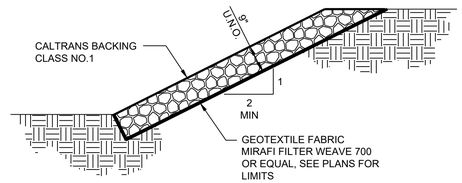

ROCK SLOPE PROTECTION

SCALE: NONE — C910 TYP

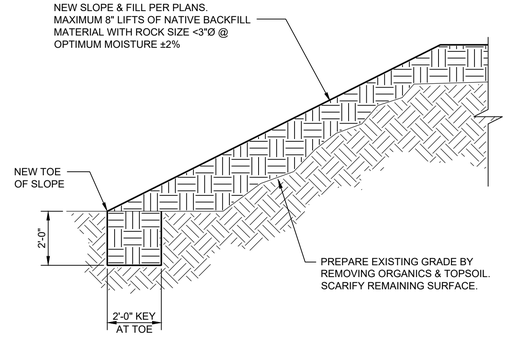

FILL WITH KEY AT TOE OF SLOPE

SCALE: NONE — C920 TYP

Revision	By	Appd.	YY.MM.DD
BID SET	KM	GIA	2022.09.01
Issued	By	Appd	YYYY.MM.DD

Permit/Seal

REGISTERED PROFESSIONAL ENGINEER — GABRIEL I. ARONOW — No. 55607 — Exp.12/31/22 — CIVIL — STATE OF CALIFORNIA

09/01/2022

Consultant

Stantec

Stantec Consulting Services Inc.
3875 Atherton Road
Rocklin CA 95765-3716
Tel: (916) 773-8100
www.stantec.com

Copyright Reserved

The Contractor shall verify and be responsible for all dimensions. DO NOT scale the drawing - any errors or omissions shall be reported to Stantec without delay. The Copyrights to all designs and drawings are the property of Stantec. Reproduction or use for any purpose other than that authorized by Stantec is forbidden.

Client/Project Logo

Client/Project

City of San Juan Bautista

SANITARY SEWER FORCE MAIN TO HOLLISTER PROJECT

San Juan Bautista, California

File Name: 31441-C001 TO C006 — ASB Dwn. — KM Dsgn. — GIA Chkd. — 2022.09.01 YYYY.MM.DD

Title

TYPICAL CIVIL DETAILS

Project No. 184031441 — Scale AS SHOWN

Revision 0 — Sheet 19 of 128 — Drawing No. C006

ORIGINAL SHEET - ANSI D

\\1840\conf\m\184031441\ut\mwing\ucs\31441-c001 to c006 2022.10.05 1:45:49 PM

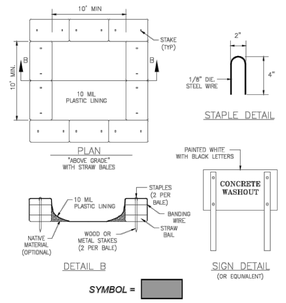

CONCRETE WASHOUT

SCALE: NOT TO SCALE

1 TYP

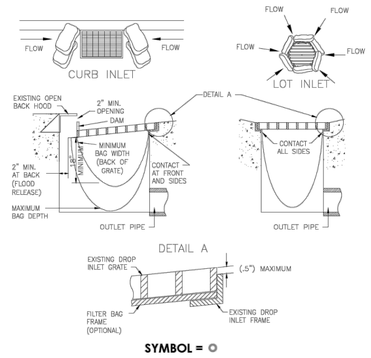

DRAIN INLET PROTECTION

SCALE: NOT TO SCALE

2 TYP

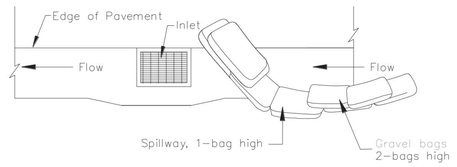

TYPICAL PROTECTION FOR INLET ON GRADE

NOTES:

1. INTENDED FOR SHORT TERM USE.
2. USE TO INHIBIT NON-STORM WATER FLOW
3. ALLOW FOR PROPER MAINTENANCE AND CLEANUP.
4. BAGS MUST BE REMOVED AFTER ADJACENT OPERATION IS COMPLETE.
5. NOT APPLICABLE IN AREAS WITH HIGH SILTS AND CLAYS WITHOUT FILTER FABRIC.
6. PROTECTION CAN B E EFFECTIVE IF IT IS NOT IMMEDIATELY ADJACENT TO THE INLET PROVIDED THAT THE INLET IS PROTECTED FROM SOURCES OF POLLUTION.

DRAIN INLET PROTECTION ON GRADE

SCALE: NOT TO SCALE

3 TYP

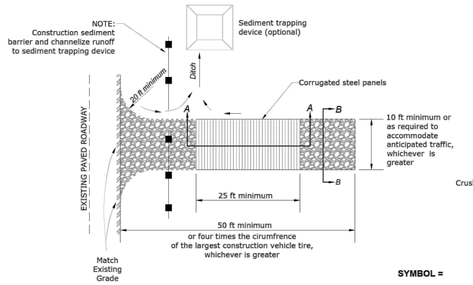

STABILIZED CONSTRUCTION ENTRANCE

SCALE: NOT TO SCALE

4 TYP

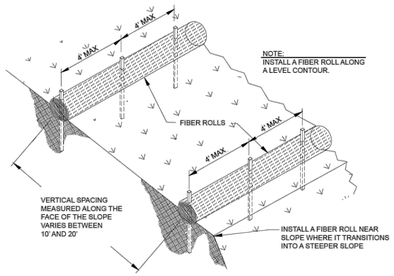

TYPICAL FIBER ROLL INSTALLATION, NTS

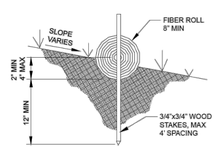

ENTRENCHMENT DETAIL, NTS

SYMBOL =

FIBER ROLLS

SCALE: NOT TO SCALE

5 TYP

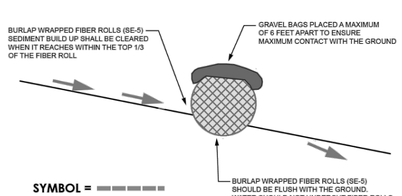

SYMBOL =

FIBER ROLLS GRAVEL BAGS

SCALE: NOT TO SCALE

6 TYP

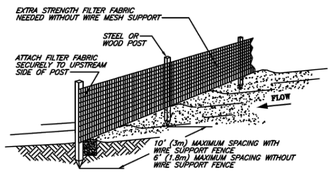

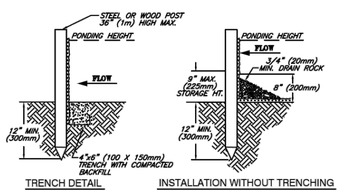

TRENCH DETAIL

INSTALLATION WITHOUT TRENCHING

NOTES:

1. SILT FENCE SHALL BE PLACED ON SLOPE CONTOURS TO MAXIMIZE PONDING EFFICIENCY.
2. INSPECT AND REPAIR FENCE AFTER EACH STORM EVENT AND REMOVE SEDIMENT WHEN NECESSARY. 9" (225mm) MAXIMUM RECOMMENDED STORAGE HEIGHT.
3. REMOVED SEDIMENT SHALL BE DEPOSITED TO AN AREA THAT WILL NOT CONTRIBUTE SEDIMENT OFFSITE AND CAN BE PERMANENTLY STABILIZED.

SYMBOL =

SILT FENCE

SCALE: NOT TO SCALE

7 TYP

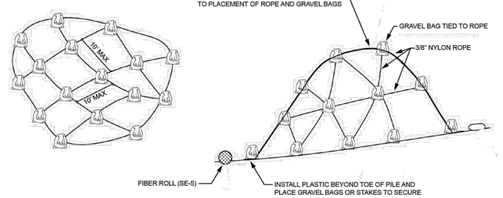

STOCKPILES

SCALE: NOT TO SCALE

8 TYP

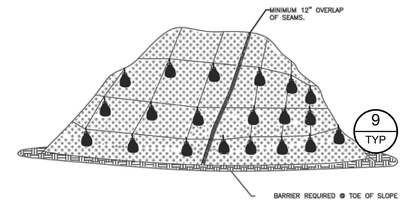

PLASTIC SHEETING

NOTES:

1. MINIMUM 12" OVERLAP OF ALL SEAMS REQUIRED.
2. BARRIER REQUIRED @ TOE OF STOCK PILE.
3. COVERING MAINTAINED TIGHTLY IN PLACE BY USING SANDBAGS OR TIRES ON ROPES WITH A MAXIMUM 10' GRID SPACING IN ALL DIRECTIONS.

PLASTIC SHEETING

SCALE: NOT TO SCALE

9 TYP

ORIGINAL SHEET - ANSI D

\\1840\Confirm\184031441\Utility\Civil\31441-C001 to C006 2022.10.05 1:46:24 PM

Revision	By	Appd.	YY.MM.DD
BID SET	KM	GIA	2022.09.01
Issued	By	Appd	YYYY.MM.DD

Permit/Seal

REGISTERED PROFESSIONAL ENGINEER GABRIEL I. ARONOW No.55607 Exp.12/31/22 CIVIL STATE OF CALIFORNIA

09/01/2022

Consultant

Stantec

Stantec Consulting Services Inc.
3875 Atherton Road
Rocklin CA 95765-3716
Tel: (916) 773-8100
www.stantec.com

Copyright Reserved

The Contractor shall verify and be responsible for all dimensions. DO NOT scale the drawing - any errors or omissions shall be reported to Stantec without delay. The Copyrights to all designs and drawings are the property of Stantec. Reproduction or use for any purpose other than that authorized by Stantec is forbidden.

Client/Project Logo

Client/Project

City of San Juan Bautista

SANITARY SEWER FORCE MAIN TO HOLLISTER PROJECT

San Juan Bautista, California

File Name: 31441-C001 TO C006	ASB	KM	GIA	2022.09.01
	Dwn.	Dsgn.	Chkd.	YYYY.MM.DD

Title

STORMWATER BEST MANAGEMENT PRACTICES TYPICAL DETAILS

Project No.	Scale
184031441	AS SHOWN
Revision	Sheet / Drawing No.
0	20 of 128 — CS01

NOTES:

1. CONTRACTOR SHALL GRADE BASIN FLOOR TO DRAIN TOWARDS ESB 1 DRAINAGE SUMP AT APPROXIMATELY A 1% SLOPE MINIMUM. NO PONDING WILL BE ALLOWED.
2. REFER TO DESIGN BUILD KEY NOTE #1 ON SHEET S100 FOR DESIGN BUILD AND STRUCTURAL DESIGN INFORMATION.

N

0 30' 60'

(E)SSMH 1, RIM EL196.00
8" (E) IE 190.50
8" (SW) IE190.20

(E)SSMH 2, RIM EL 195.28
8" (NE) IE 190.38
8" (E) IE 190.18

8" SS

EXISTING HEADWORKS MODIFICATIONS, STORAGE PUMP STATION, PIG LAUNCHER & NEW PRIMARY PUMP STATION SEE DWG D100 & M100

(E)MH 4, RIM EL 225.33
12" IE 208±

EXISTING CONTROL BUILDING & NEW EMERGENCY GENERATOR SEE DWG D200 & M200

8" SS
TO ESB & TANKS

(E)SSMH , RIM EL195.95
18" (NE) IE 190.75
18" (S) IE 190.55

NEW FLOW METER VAULT, SEE DWG M100

WORK LIMITS

3" D
2% SLOPE MIN

(E) PLANT ENTRANCE

NEW MCC PAD SEE ELEC DWGS

10" SS FM
TO HOLISTER WWTP FOR CONTINUATION SEE DWG C041

12" SS RETURN

NEW XFR & MSB SEE DWG E023

(E)MH 3
RIM EL 211.50
12" IE 208±

NEW ESB OVERFLOW 1 C023

3 C023 NEW ESB 1 DRAINAGE SUMP

NEW FLOW METER VAULT, SEE DWG M100

NEW CHEMICAL FILLING STATION, SEE DWG M104

NEW CHEMICAL SYSTEM SEE DWG M105

R&W EXISTING FILTER SYSTEM & UV DISINFECTION, SEE DWG D003

R&W EXISTING CCB & PLANT DISCHARGE SEE DWG D003

2" CHEM

WORK LIMITS

EXISTING CHAIN-LINK FENCE

EXISTING TREATMENT POND 2
CONVERT TO
EMERGENCY STORAGE BASIN 1
SEE NOTE 1 & DWG D001

FLUSH & EQUALIZATION TANK MODIFICATIONS, SEE DWG C022

WORK LIMITS

EXISTING CHAIN-LINK FENCE

WORK LIMITS

EXISTING TREATMENT POND 1
CONVERT TO
EMERGENCY STORAGE BASIN 2
SEE DWG D001

NEW ESB OVERFLOW 1 C023

WORK LIMITS

ICIATES

ORIGINAL SHEET - ANSI D

\\<\.\MAP\active\184031441\drawing\sct\31441-c020 & c021 2022.10.27 2:14:49 AM

Revision	By	Appd.	YY.MM.DD
PERMIT SET	KM	GIA	2022.10.10
Issued	By	Appd	YYYY.MM.DD

Permit/Seal

REGISTERED PROFESSIONAL ENGINEER
GABRIEL I. ARONOW
No. 55607
Exp.12/31/22
CIVIL
STATE OF CALIFORNIA

09/01/2022

Consultant

Stantec

Stantec Consulting Services Inc.
3875 Atherton Road
Rocklin CA 95765-3716
Tel: (916) 773-8100
www.stantec.com

Copyright Reserved

The Contractor shall verify and be responsible for all dimensions. DO NOT scale the drawing - any errors or omissions shall be reported to Stantec without delay. The Copyrights to all designs and drawings are the property of Stantec. Reproduction or use for any purpose other than that authorized by Stantec is forbidden.

Client/Project Logo

Client/Project

City of San Juan Bautista

SANITARY SEWER FORCE MAIN TO HOLLISTER PROJECT

San Juan Bautista, California

File Name: 31441-C020 & C021	ASB	KM	GIA	2022.10.10
	Dwn.	Dsgn.	Chkd.	YYYY.MM.DD

Title

WWTP GENERAL SITE PLAN

Project No.	Scale
184031441	1" = 30'

Revision	Sheet	Drawing No.
0	21 of 128	C020

NOTES:

1. REFER TO DESIGN BUILD KEY NOTE #1 ON SHEET S100 FOR DESIGN BUILD AND STRUCTURAL DESIGN INFORMATION.

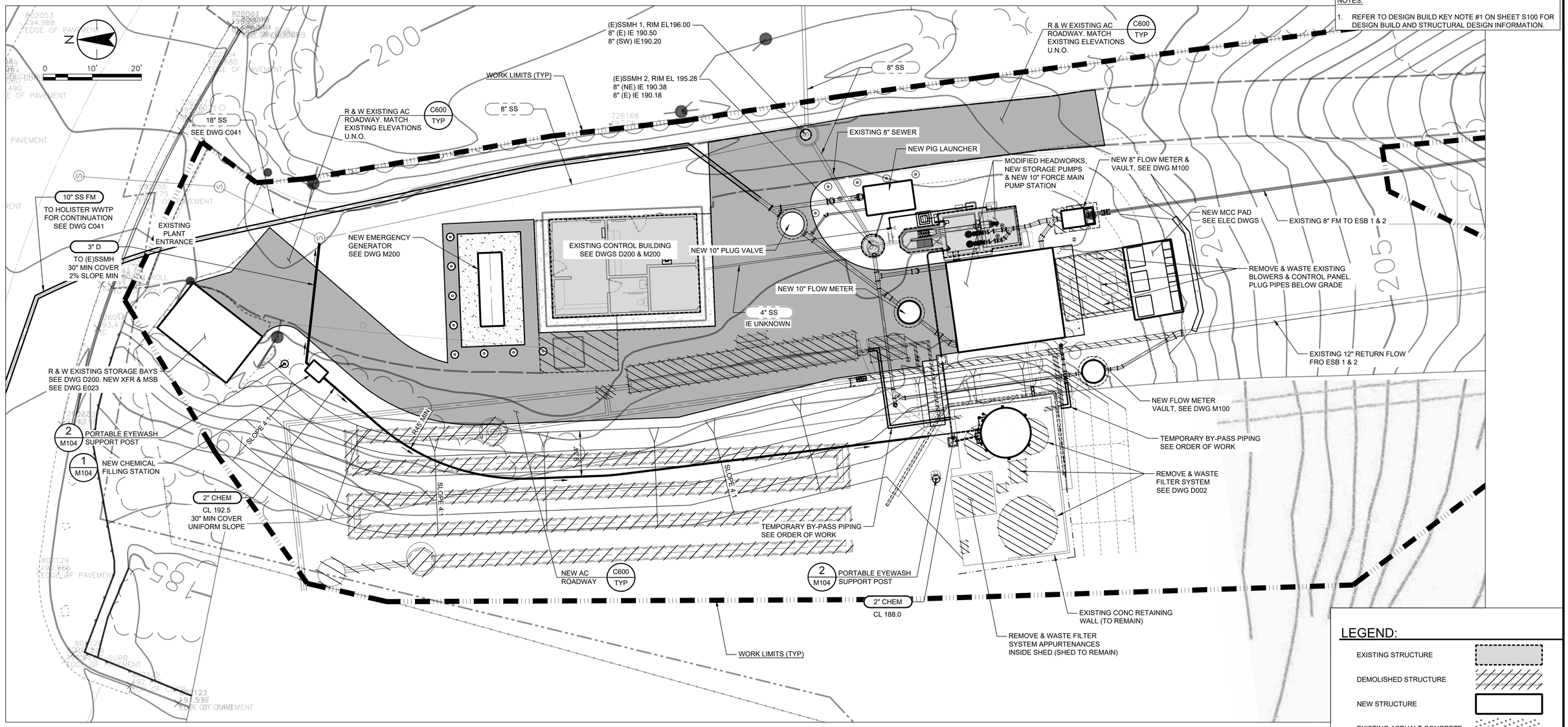

LEGEND:

- EXISTING STRUCTURE
- DEMOLISHED STRUCTURE
- NEW STRUCTURE
- EXISTING ASPHALT CONCRETE
- NEW & REPLACED ASPHALT CONCRETE
- NEW CONCRETE
- NEW CONTOUR LINES
- EXISTING CONTOUR LINES

Revision	By	Appd.	YY.MM.DD
PERMIT SET	KM	GIA	2022.10.10
Issued	By	Appd	YYYY.MM.DD

Permit/Seal

REGISTERED PROFESSIONAL ENGINEER GABRIEL I. ARONOW No.55807 Exp.12/31/22 CIVIL STATE OF CALIFORNIA

09/01/2022

Consultant

Stantec

Stantec Consulting Services Inc.
3875 Atherton Road
Rocklin CA 95765-3716
Tel: (916) 773-8100
www.stantec.com

Copyright Reserved

The Contractor shall verify and be responsible for all dimensions. DO NOT scale the drawing - any errors or omissions shall be reported to Stantec without delay. The Copyrights to all designs and drawings are the property of Stantec. Reproduction or use for any purpose other than that authorized by Stantec is forbidden.

Client/Project Logo

Client/Project

City of San Juan Bautista

SANITARY SEWER FORCE MAIN TO HOLLISTER PROJECT

San Juan Bautista, California

File Name: 31441-C020 & C021 | ASB Dwn. | KM Dsgn. | GIA Chkd. | 2022.10.10 YYYY.MM.DD

Title

CONTROL BUILDING AND HEADWORKS PLAN

Project No. 184031441 | Scale 1" = 10'

Revision 0 | Sheet 22 of 128 | Drawing No. C021

ORIGINAL SHEET - ANSI D

<v:\1Mfl\active\184031441\cad\dwg\dwt\31441-c020 & c021 2022.10.27 12:43 AM.dwt>

NOTES:

1. REFER TO DESIGN BUILD KEY NOTE #1 ON SHEET S100 FOR DESIGN BUILD AND STRUCTURAL DESIGN INFORMATION.

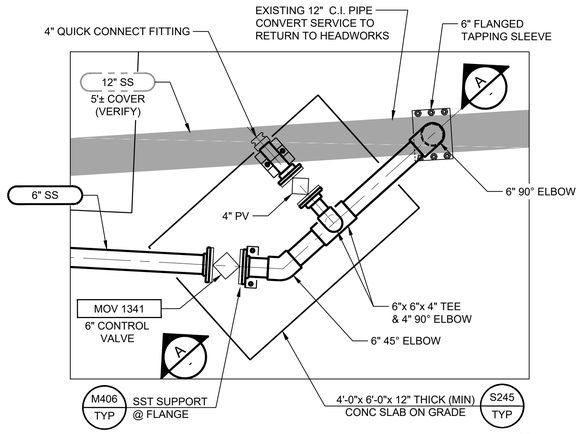

DETAIL 1 -
SCALE: 1/2" = 1'-0"

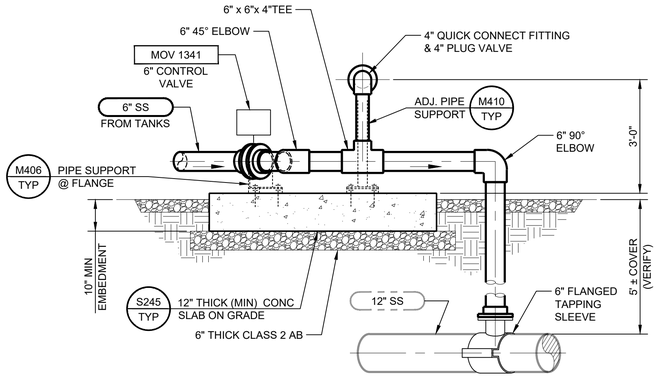

SECTION A -
SCALE: 1/2" = 1'-0"

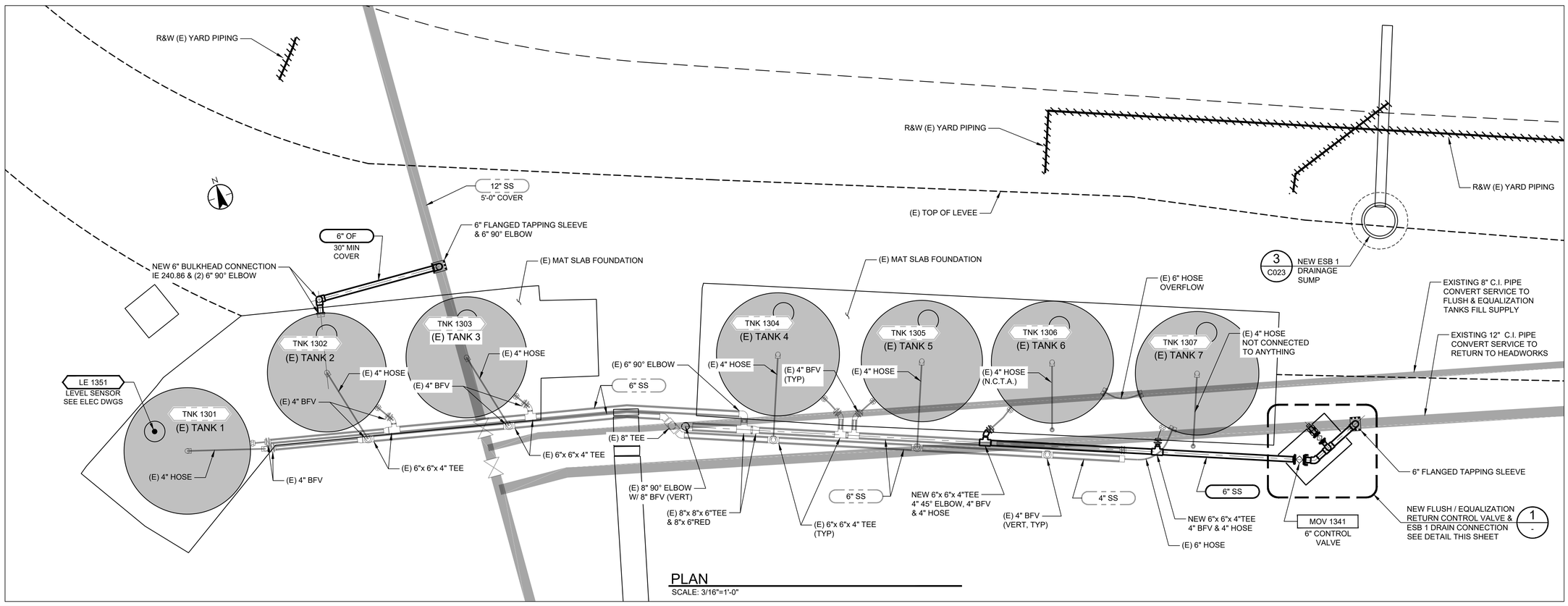

PLAN
SCALE: 3/16"=1'-0"

Revision	By	Appd.	YY.MM.DD

PERMIT SET	KM	GIA	2022.10.10
Issued	By	Appd	YYYY.MM.DD

Permit/Seal

REGISTERED PROFESSIONAL ENGINEER GABRIEL I. ARONOW No.55507 Exp.12/31/22 CIVIL STATE OF CALIFORNIA

09/01/2022

Consultant

Stantec

Stantec Consulting Services Inc.
3875 Atherton Road
Rocklin CA 95765-3716
Tel: (916) 773-8100
www.stantec.com

Copyright Reserved

The Contractor shall verify and be responsible for all dimensions. DO NOT scale the drawing - any errors or omissions shall be reported to Stantec without delay. The Copyrights to all designs and drawings are the property of Stantec. Reproduction or use for any purpose other than that authorized by Stantec is forbidden.

Client/Project Logo

Client/Project

City of San Juan Bautista

SANITARY SEWER FORCE MAIN TO HOLLISTER PROJECT

San Juan Bautista, California

File Name: 31441-C022 & C023	ASB	KM	GIA	2022.10.10
	Dwn.	Dsgn.	Chkd.	YYYY.MM.DD

Title

FLUSH & EQUALIZATION TANKS PLAN, SECTION AND DETAIL

Project No.	Scale
184031441	AS SHOWN

Revision	Sheet	Drawing No.
0	23 of 128	C022

ORIGINAL SHEET - ANSI D

v:\1840\active\184031441\drawing\act\31441-c022 & c023 2022.10.27 9:17:46 AM

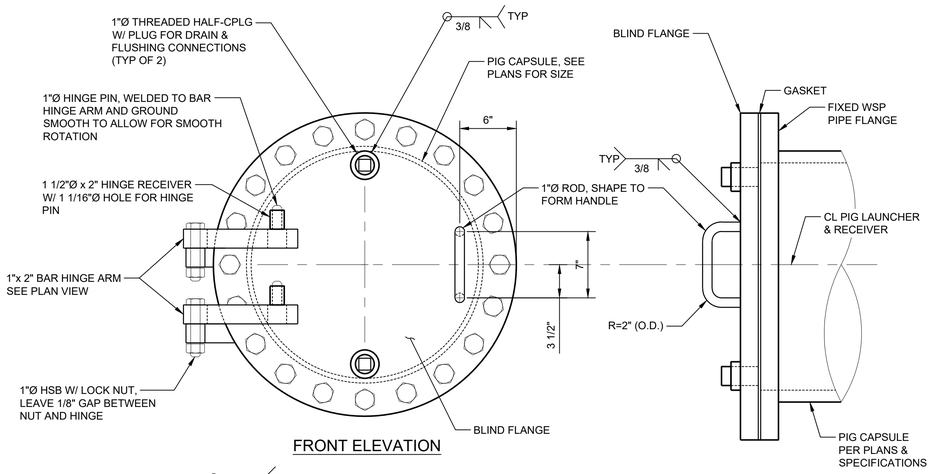

HINGED PIGGING STATION ACCESS FLANGE DETAIL

SCALE: NOT TO SCALE

2 C024 | 2 C025

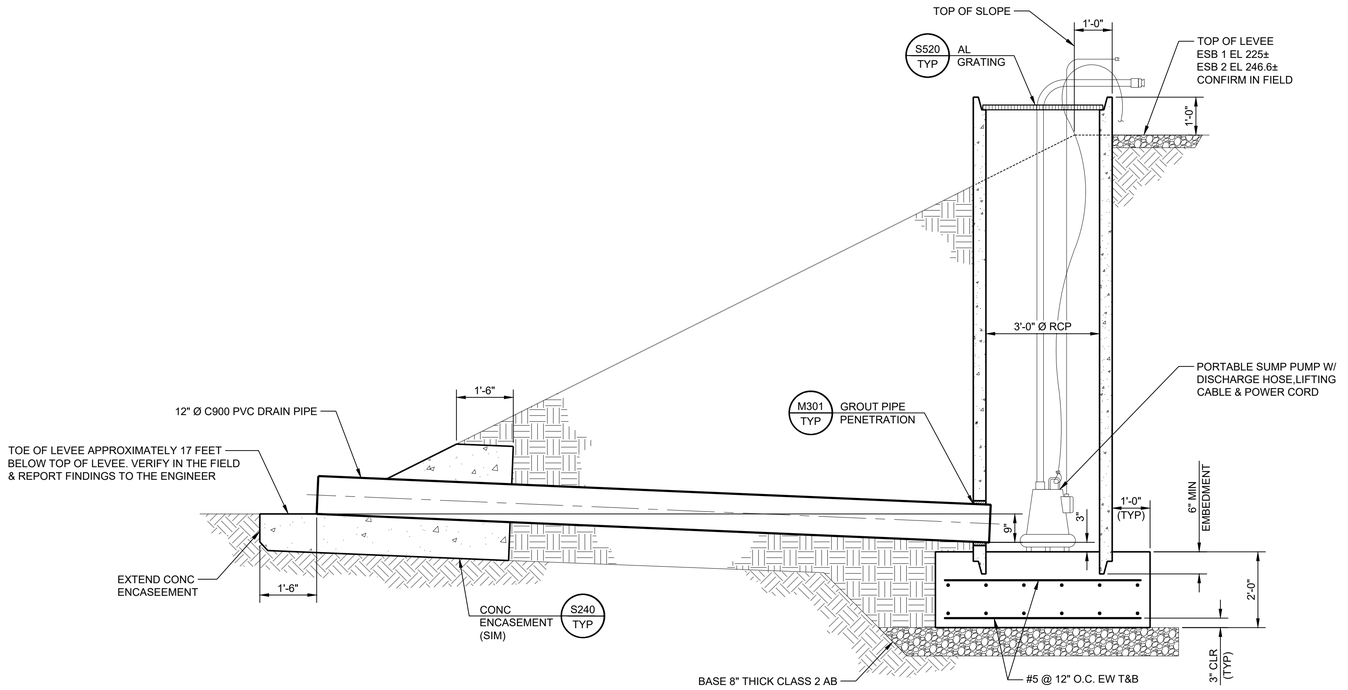

ESB 1 DRAINAGE SUMP DETAIL

SCALE: NOT TO SCALE

3 C020

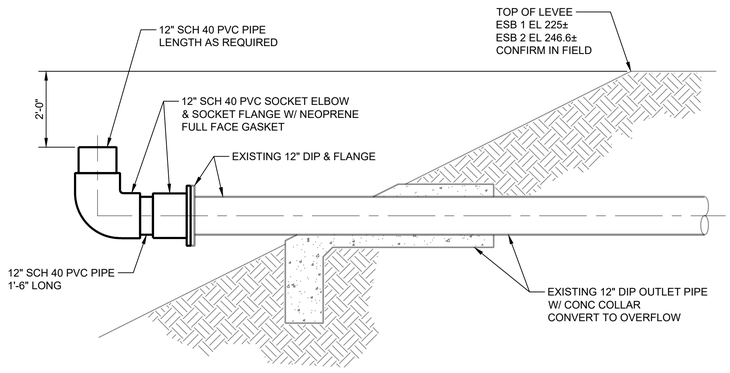

ESB 1 & 2 OVERFLOW DETAIL

SCALE: 1/2"=1'-0"

1 C020

Revision	By	Appd.	YY.MM.DD
BID SET	KM	GIA	2022.09.01
Issued	By	Appd	YYYY.MM.DD

Permit/Seal

REGISTERED PROFESSIONAL ENGINEER GABRIEL I. ARONOW No.55607 Exp.12/31/22 CIVIL STATE OF CALIFORNIA

09/01/2022

Consultant

Stantec

Stantec Consulting Services Inc.
3875 Atherton Road
Rocklin CA 95765-3716
Tel:(916) 773-8100
www.stantec.com

Copyright Reserved
The Contractor shall verify and be responsible for all dimensions. DO NOT scale the drawing - any errors or omissions shall be reported to Stantec without delay. The Copyrights to all designs and drawings are the property of Stantec. Reproduction or use for any purpose other than that authorized by Stantec is forbidden.

Client/Project Logo

Client/Project

City of San Juan Bautista

SANITARY SEWER FORCE MAIN TO HOLLISTER PROJECT

San Juan Bautista, California

File Name: 31441-C022 & C023	ASB	KM	GIA	2022.09.01
	Dwn.	Dsgn.	Chkd.	YYYY.MM.DD

Title

YARD PIPING DETAILS

Project No.	Scale
184031441	AS SHOWN
Revision	Sheet
0	24 of 128

Drawing No. C023

ORIGINAL SHEET - ANSI D

v:\1-MKD-confid\184031441\drawing\pc\oct\31441-c022 & c023 2022.10.05 1:52:27 PM

UNDERGROUND SERVICE ALERT

CALL: 811

TWO WORKING DAYS BEFORE YOU DIG

*** CAUTION ***

BURIED AND OVERHEAD UTILITIES

CONTRACTOR TO COORDINATE WORK WITH PG&E, AT&T, SBCWD, CITY OF SAN JUAN BAUTISTA, CITY OF HOLLISTER AND ANY OTHER UTILITY COMPANIES OBSERVED ADJACENT TO THE PROJECT PRIOR TO WORKING IN THE AREA OF THEIR UTILITIES

NOTES:

1. ALL WORK SHALL BE WITHIN THE COUNTY RIGHT OF WAY.
2. VAULT HATCHES SHALL HAVE SAFETY POSTS & CHAINS PROVIDING FALL PROTECTION WHEN THE COVER IS IN THE OPEN POSITION. MATERIAL OF CONSTRUCTION SHALL BE EITHER 316 STAINLESS STEEL OR ALUMINUM, SEE SPECIFICATION SECTION 08310. TOP OF VAULT TO BE MINIMUM 1" ABOVE FINISHED GRADE.
3. PLUG VALVE SHALL BE "FULL 100% PORT (PIGGABLE)".
4. INSTALL NEW ASPHALT CONCRETE ROAD PER TYPICAL CIVIL DETAIL C600 WHERE DAMAGED FROM CONSTRUCTION.

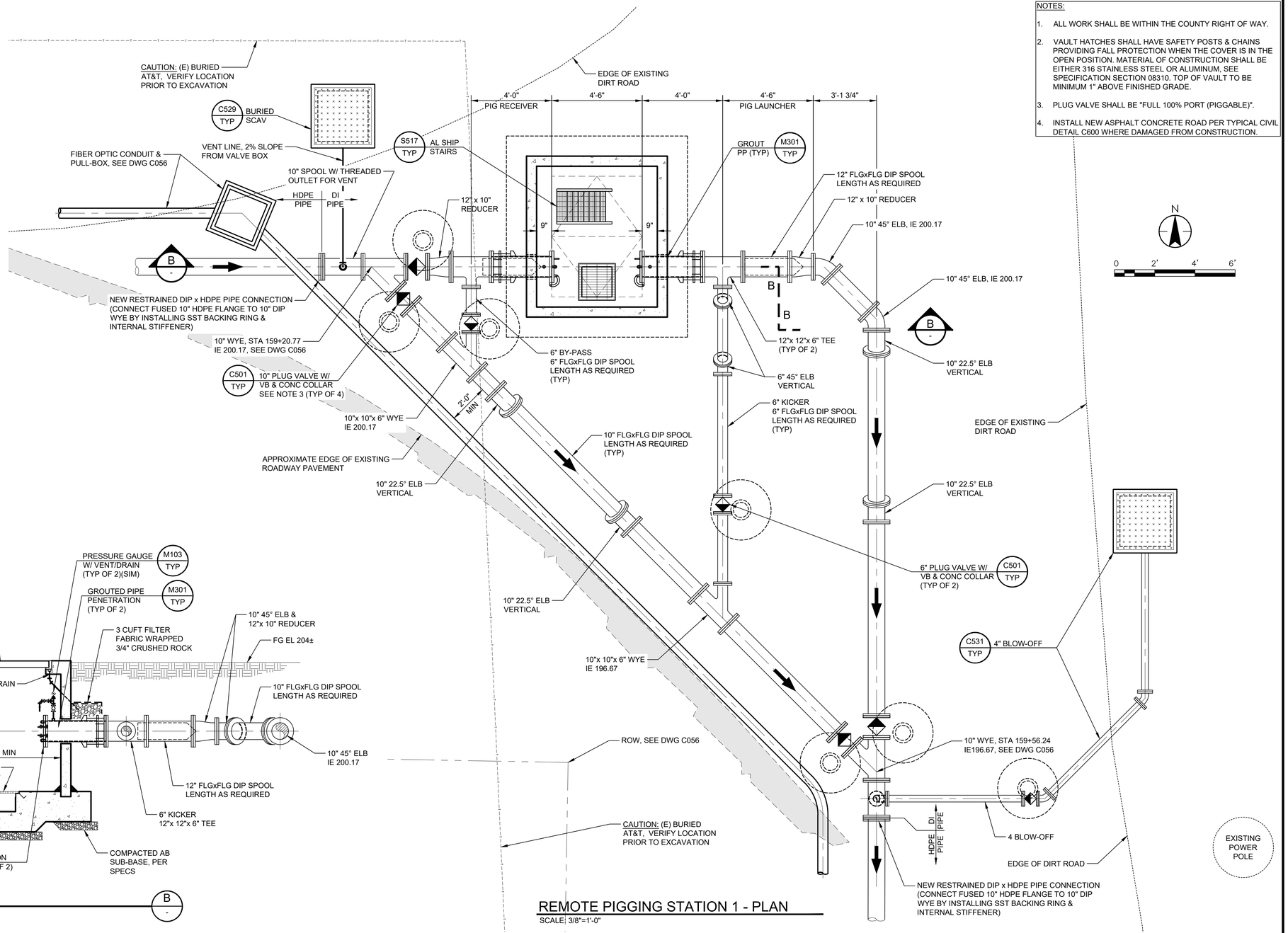

REMOTE PIGGING STATION 1 - PLAN

SCALE: 3/8"=1'-0"

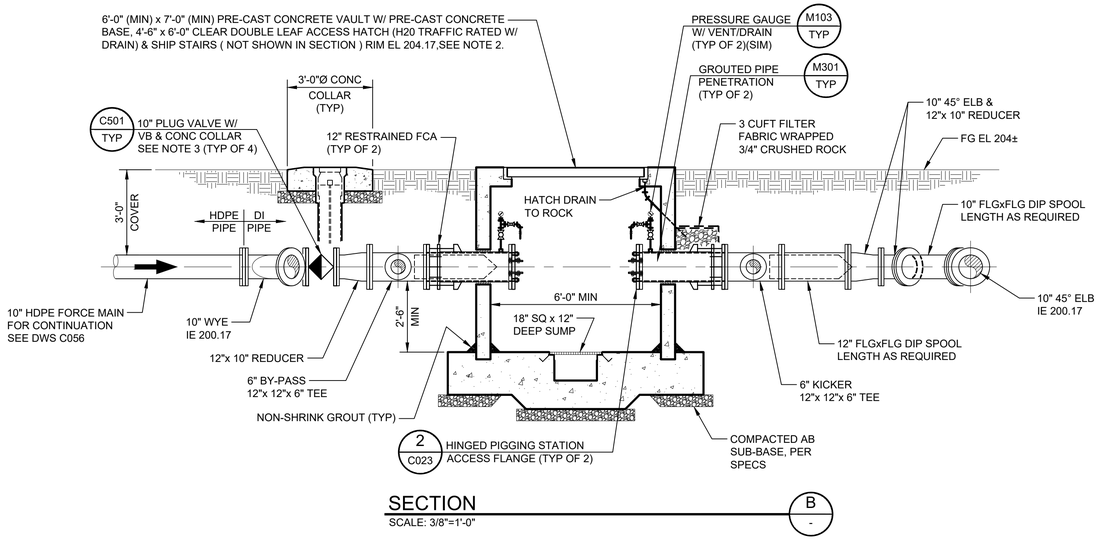

SECTION

SCALE: 3/8"=1'-0"

B -

Revision	By	Appd.	YY.MM.DD
BID SET	KM	GIA	2022.12.30
PERMIT SET	KM	GIA	2022.10.10
Issued	By	Appd	YYYY.MM.DD

Permit/Seal

REGISTERED PROFESSIONAL ENGINEER GABRIEL I. ARONOW No.55607 Exp.12/31/24 CIVIL STATE OF CALIFORNIA

12/30/2022

Consultant

Stantec

Stantec Consulting Services Inc.
3875 Atherton Road
Rocklin CA 95765-3716
Tel: (916) 773-8100
www.stantec.com

Copyright Reserved

The Contractor shall verify and be responsible for all dimensions. DO NOT scale the drawing - any errors or omissions shall be reported to Stantec without delay. The Copyrights to all designs and drawings are the property of Stantec. Reproduction or use for any purpose other than that authorized by Stantec is forbidden.

Client/Project Logo

Client/Project

City of San Juan Bautista

SANITARY SEWER FORCE MAIN TO HOLLISTER PROJECT

San Juan Bautista, California

File Name: 31441-C024 & C025 | ASB Dwn. | KM Dsgn. | GIA Chkd. | 2022.12.30 YYYY.MM.DD

Title

REMOTE PIGGING STATION 1 PLAN, SECTION AND DETAIL

Project No. 184031441 | Scale AS SHOWN

Revision 0 | Sheet 25 of 128 | Drawing No. C024

ORIGINAL SHEET - ANSI D

v:\1845\active\184031441\drawing\sct\31441-c024 & c025 2023.01.12 7:17:56 AM

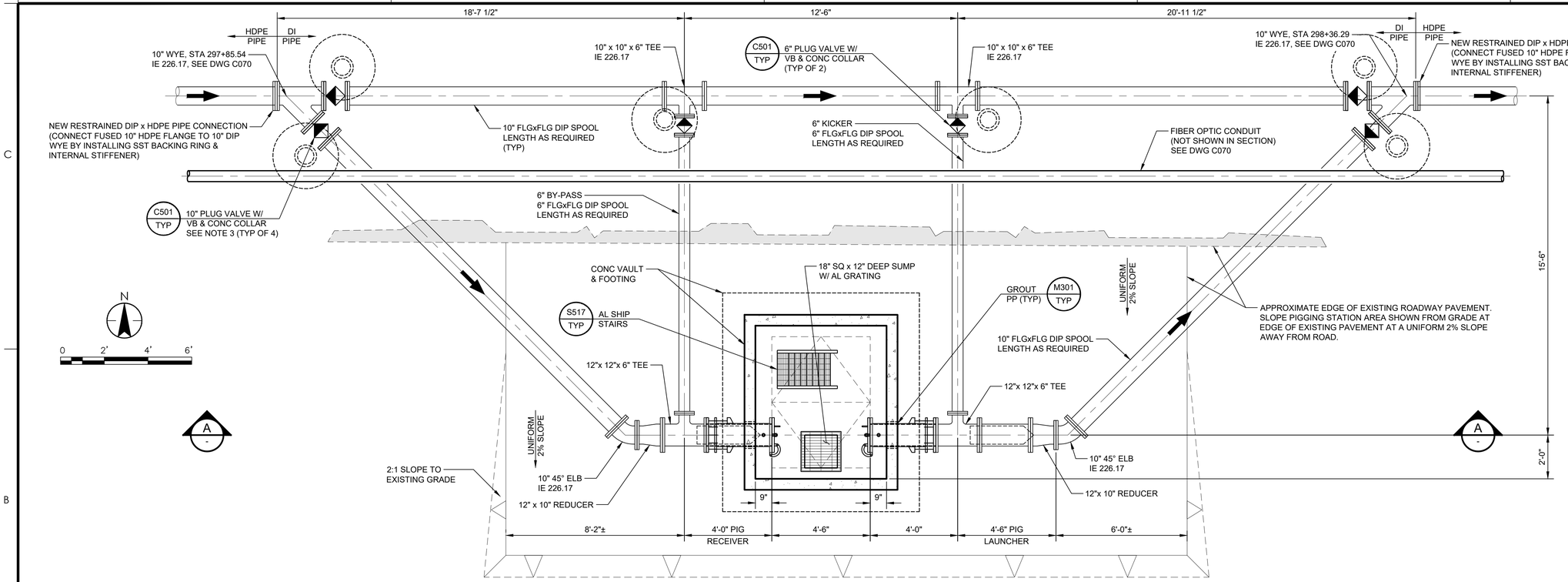

REMOTE PIGGING STATION 2 - PLAN

SCALE: 3/8"=1'-0"

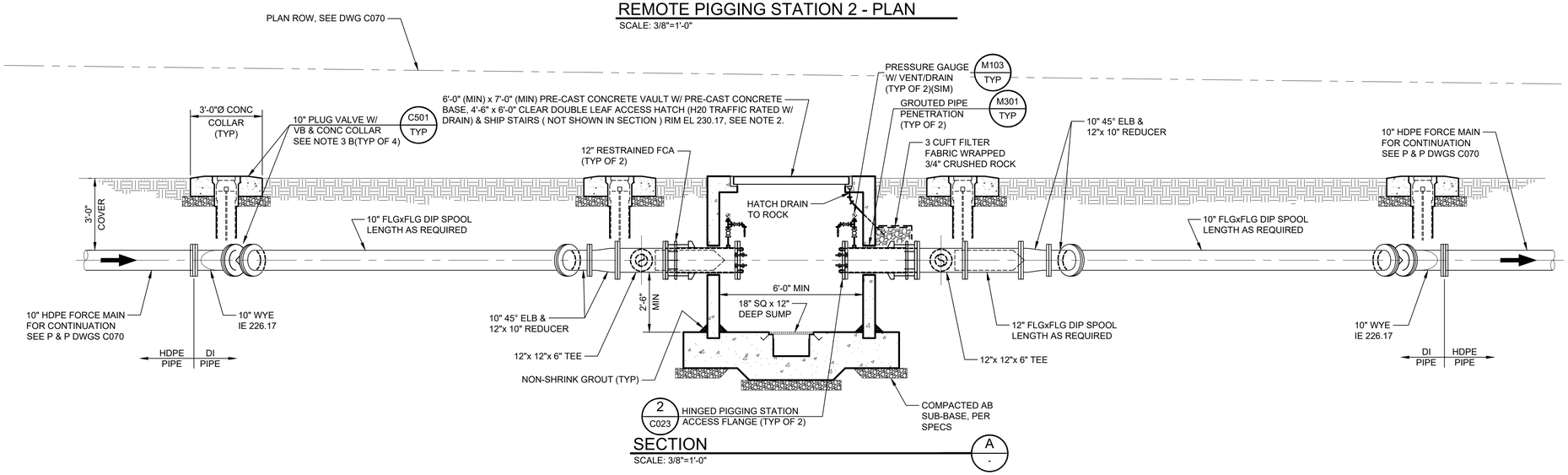

SECTION

SCALE: 3/8"=1'-0"

A -

NOTES:

1. ALL WORK SHALL BE WITHIN THE COUNTY RIGHT OF WAY.
2. VAULT HATCHES SHALL HAVE SAFETY POSTS & CHAINS PROVIDING FALL PROTECTION WHEN THE COVER IS IN THE OPEN POSITION. MATERIAL OF CONSTRUCTION SHALL BE EITHER 316 STAINLESS STEEL OR ALUMINUM, SEE SPECIFICATION SECTION 08310. TOP OF VAULT TO BE MINIMUM 1" ABOVE FINISHED GRADE.
3. PLUG VALVE SHALL BE "FULL 100% PORT (PIGGABLE)"
4. INSTALL NEW ASPHALT CONCRETE ROAD PER TYPICAL CIVIL DETAIL C600 WHERE DAMAGED FROM CONSTRUCTION.

UNDERGROUND SERVICE ALERT

CALL: 811

TWO WORKING DAYS BEFORE YOU DIG

* CAUTION *

BURIED AND OVERHEAD UTILITIES

CONTRACTOR TO COORDINATE WORK WITH PG&E, AT&T, SBCWD, CITY OF SAN JUAN BAUTISTA, CITY OF HOLLISTER AND ANY OTHER UTILITY COMPANIES OBSERVED ADJACENT TO THE PROJECT PRIOR TO WORKING IN THE AREA OF THEIR UTILITIES

Revision	By	Appd.	YY.MM.DD
BID SET	KM	GIA	2022.12.30
PERMIT SET	KM	GIA	2022.10.10
Issued	By	Appd	YYYY.MM.DD

Permit/Seal

REGISTERED PROFESSIONAL ENGINEER GABRIEL I. ARONOW No.55807 Exp.12/31/24 CIVIL STATE OF CALIFORNIA

12/30/2022

Consultant

Stantec

Stantec Consulting Services Inc.
3875 Atherton Road
Rocklin CA 95765-3716
Tel: (916) 773-8100
www.stantec.com

Copyright Reserved

The Contractor shall verify and be responsible for all dimensions. DO NOT scale the drawing - any errors or omissions shall be reported to Stantec without delay. The Copyrights to all designs and drawings are the property of Stantec. Reproduction or use for any purpose other than that authorized by Stantec is forbidden.

Client/Project Logo

Client/Project

City of San Juan Bautista

SANITARY SEWER FORCE MAIN TO HOLLISTER PROJECT

San Juan Bautista, California

File Name: 31441-C024 & C025 | ASB Dwn. | KM Dsgn. | GIA Chkd. | 2022.12.30 YYYY.MM.DD

Title

REMOTE PIGGING STATION 2 PLAN AND SECTION

Project No. 184031441 | Scale AS SHOWN

Revision 0 | Sheet 26 of 128 | Drawing No. C025

ORIGINAL SHEET - ANSI D

v:\1MP\cad\civil\184031441\plotting\dwt\31441-c024 & c025 2020.01 (7.2 18:45).Axl

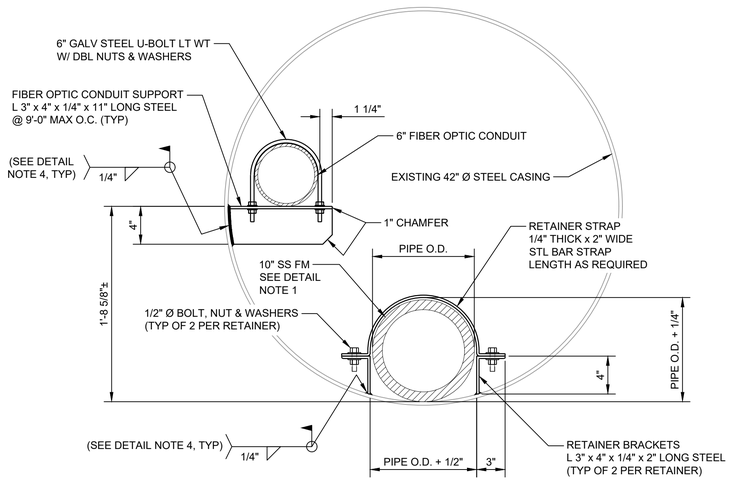

DETAIL NOTES:

1. 10" SS FM (HDPE PIPE) SHALL REST ON THE BOTTOM OF THE EXISTING 42" Ø STEEL CASING. PIPE RETAINERS SHALL BE INSTALLED SPACED AT 10'-0" CENTER TO CENTER THE ENTIRE LENGTH OF THE CASING. PIPE RETAINERS SHALL NOT RESTRICT EXPANSION AND CONTRACTION OF THE PIPE
2. FIBER OPTIC CONDUIT SUPPORT, RETAINER BAR AND RETAINER BRACKET MATERIAL OF CONSTRUCTION SHALL BE A36 STEEL. REMOVE ALL BURRS AND SHARP EDGES.
3. PRIOR TO WELDING RETAINER BRACKETS & FIBER OPTIC CONDUIT SUPPORT IN PLACE REMOVE ALL DIRT, PAINT AND CORROSION ON EXISTING CASING TO BARE METAL 2" CLEAR OF WELDING AREA.
4. PAINT THE RETAINER STRAP PER SPECIFICATIONS IN THE SHOP. PAINT THE RETAINER BRACKETS, FIBER OPTIC CONDUIT SUPPORT ANGLE AND CASING WELD AREA PER SPECIFICATIONS AFTER INSTALLATION IN THE FIELD.
5. EXISTING 42" CASING SHALL BE CLOSED AT BOTH ENDS WITH A BULKHEAD. THE CASING WILL NOT BE FILLED. THE BULKHEAD SHALL CONSIST OF (2) LAYERS OF 3/4" EXTERIOR PLYWOOD 48" x 48" REINFORCED WITH (4) VERTICAL PRESSURE TREATED LUMBER 2x4 x 48" LONG, SPACED 16" CENTER TO CENTER SECURED WITH #10 x 3 1/2" LONG EXTERIOR DECK SCREWS AT 8" CENTER TO CENTER THROUGH BOTH LAYERS OF PLYWOOD. CENTER BULKHEAD OVER PIPE, PLYWOOD AGAINST OPENING WITH 3/4" CRUSHED ROCK AT BOTTOM TO HOLD IN PLACE DURING BACKFILLING.

10" SS FM PIPE RETAINER DETAIL

SCALE: 1 1/2" =1'-0"

2 / C078

MANHOLE NOTES:

A. PREPARE REPAIR AND RESTORATION PLAN AND SUBMIT FOR APPROVAL. PROVIDE STANDARD SUBMITTAL DURATION FOR PLAN REVIEW AND APPROVAL.
B. UPON APPROVAL OF REPAIR AND RESTORATION PLAN, REMOVE LID; SECURE SITE.
C. CLEAN MANHOLE INTERIOR ABOVE WATER LINE. COMPLETE WORK AT NIGHT TO ACHIEVE MINIMUM WATER LEVEL AND MAXIMUM CONCRETE EXPOSURE.
D. PLUG INFLUENT SEWER AT NIGHT TO MINIMIZE INFLUENT FLOW AND MAXIMIZE APPROVED SHUTDOWN DURATION. DRY MANHOLE WITH ACTIVE FANS.
E. CONCRETE MORTAR ALL EXPOSE CONCRETE FILLING GAPS AND CREATING A NEW SMOOTH FINISH. RESTORE INFLUENT FLOW.
F. SET NEW MANHOLE TOP AND LID.
G. PLUG INFLUENT SEWER AT NIGHT AND RECOAT MANHOLE INTERIOR.
H. RESTORE NORMAL FLOW

NOTES:

1. PLUG VALVE SHALL BE "FULL 100% PORT (PIGGABLE)".

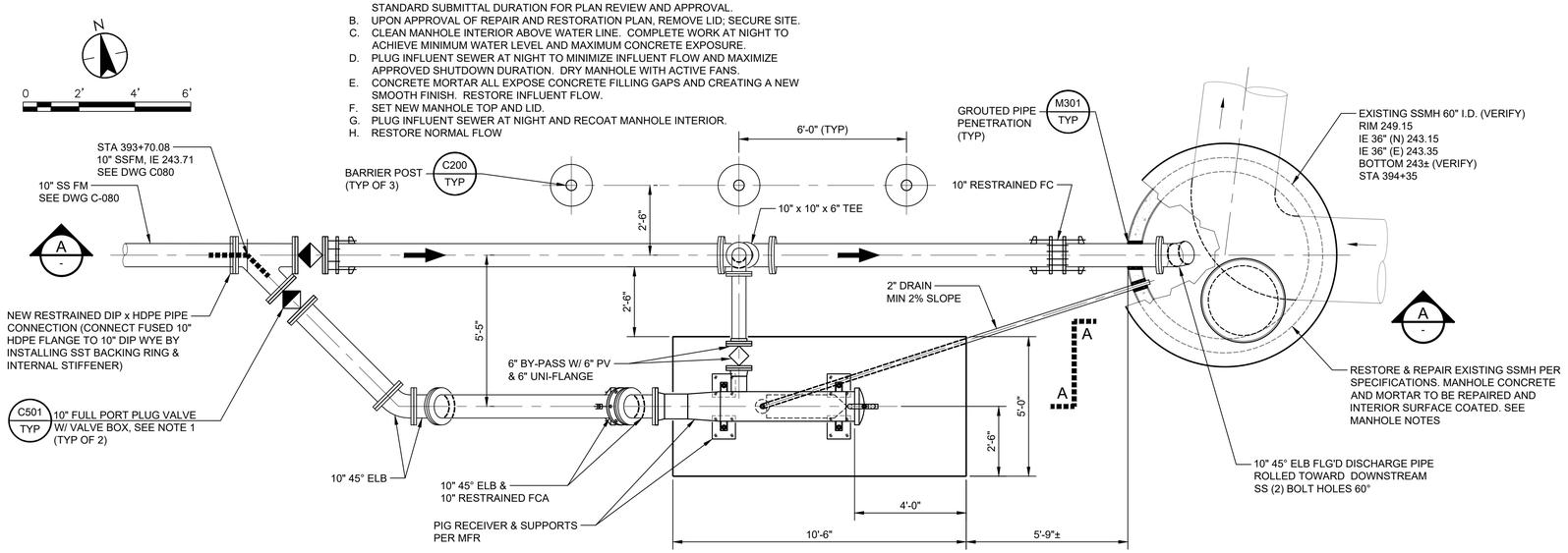

PLAN

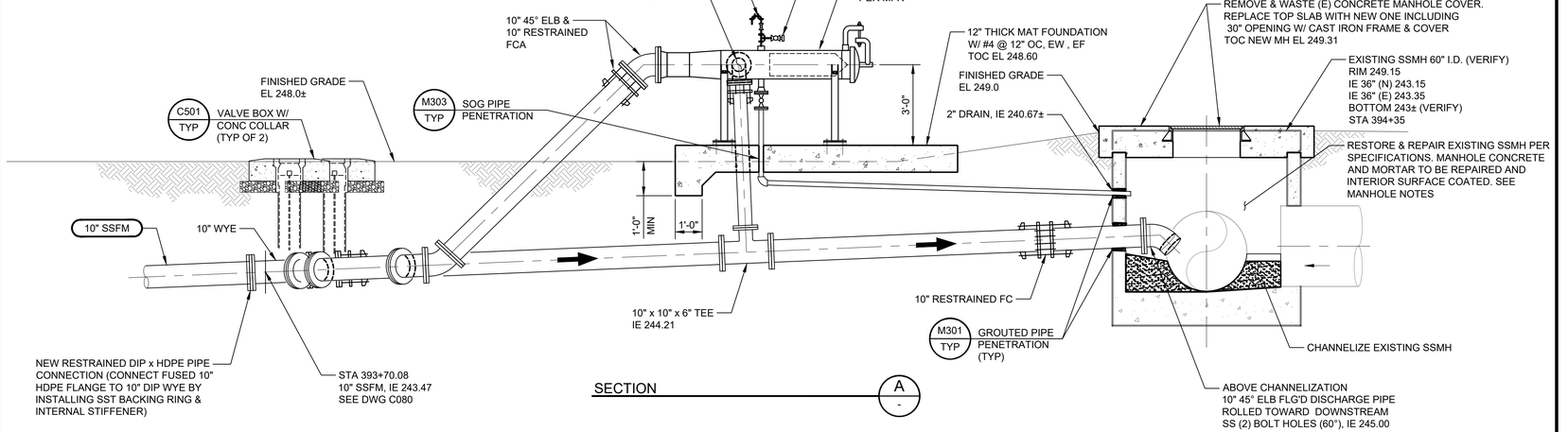

SECTION

A / -

INFLUENT MH CONNECTION AND PIG RECEIVING STATION DETAIL

SCALE: 3/8"=1'-0"

1 / C-080

Revision	By	Appd.	YY.MM.DD
BID SET	KM	GIA	2022.12.30
PERMIT SET	KM	GIA	2022.10.10
Issued	By	Appd	YYYY.MM.DD

Permit/Seal

REGISTERED PROFESSIONAL ENGINEER
GABRIEL I. ARONOW
No. 55807
Exp.12/31/24
CIVIL
STATE OF CALIFORNIA

12/30/2022

Consultant

Stantec

Stantec Consulting Services Inc.
3875 Atherton Road
Rocklin CA 95765-3716
Tel: (916) 773-8100
www.stantec.com

Copyright Reserved
The Contractor shall verify and be responsible for all dimensions. DO NOT scale the drawing - any errors or omissions shall be reported to Stantec without delay.
The Copyrights to all designs and drawings are the property of Stantec. Reproduction or use for any purpose other than that authorized by Stantec is forbidden.

Client/Project Logo

Client/Project

City of San Juan Bautista

SANITARY SEWER FORCE MAIN
TO HOLLISTER PROJECT

San Juan Bautista, California

File Name: 31441-C026 | ASB Dwn. | KM Dsgn. | GIA Chkd. | 2022.12.30 YYYY.MM.DD

Title

10" FORCE MAIN CONNECTION TO HOLLISTER WWTP MH No.B10-1 & PIG RECEIVING STATION
PLAN, SECTION AND DETAIL

Project No. 184031441 | Scale AS SHOWN

Revision 0 | Sheet 27 of 128 | Drawing No. C026

ORIGINAL SHEET - ANSI D

\\<LMR>\active\184031441\ghowrig\civil\31441-c026
2023.02.14 4:45:23 PM

UNDERGROUND SERVICE ALERT

CALL: 811

TWO WORKING DAYS BEFORE YOU DIG

*** CAUTION ***

BURIED AND OVERHEAD UTILITIES

CONTRACTOR TO COORDINATE WORK WITH PG&E, AT&T, SBCWD, CITY OF SAN JUAN BAUTISTA, CITY OF HOLLISTER AND ANY OTHER UTILITY COMPANIES OBSERVED ADJACENT TO THE PROJECT PRIOR TO WORKING IN THE AREA OF THEIR UTILITIES

NOTES:

1. ALL WORK SHALL BE WITHIN THE COUNTY RIGHT OF WAY.
2. VAULT HATCHES SHALL HAVE SAFETY POSTS & CHAINS PROVIDING FALL PROTECTION WHEN THE COVER IS IN THE OPEN POSITION.
3. CONTRACTOR SHALL PROVIDE AND INSTALL 45 MIL REINFORCED POLY PROPYLENE PIPE BOOT SECURED TO BOTH THE CASING PIPE AND 10" HDPE SSFM WITH (2) STAINLESS STEEL PIPE STRAPS EACH END. ALL PROPYLENE SEAM SHALL BE HEAT FUSED.
4. POSITION TWO 12" LONG 6" WIDE STYROFOAM BLOCKS EVERY 5 FEET THROUGH THE CASING TO SECURE THE FORCE MAIN IN PLACE. STYROFOAM DEPTH SHALL BE CUT TO FIT (SNUG FIT). BLOCKS MAY BE PUSHED INTO PLACE FROM EITHER END, AS APPROVED BY THE ENGINEER.
5. CASING PIPE SHALL BE COATED AND LINED PER SPEC 09900. ALTERNATIVELY, PROVIDE FELCS PER SPEC 15051.

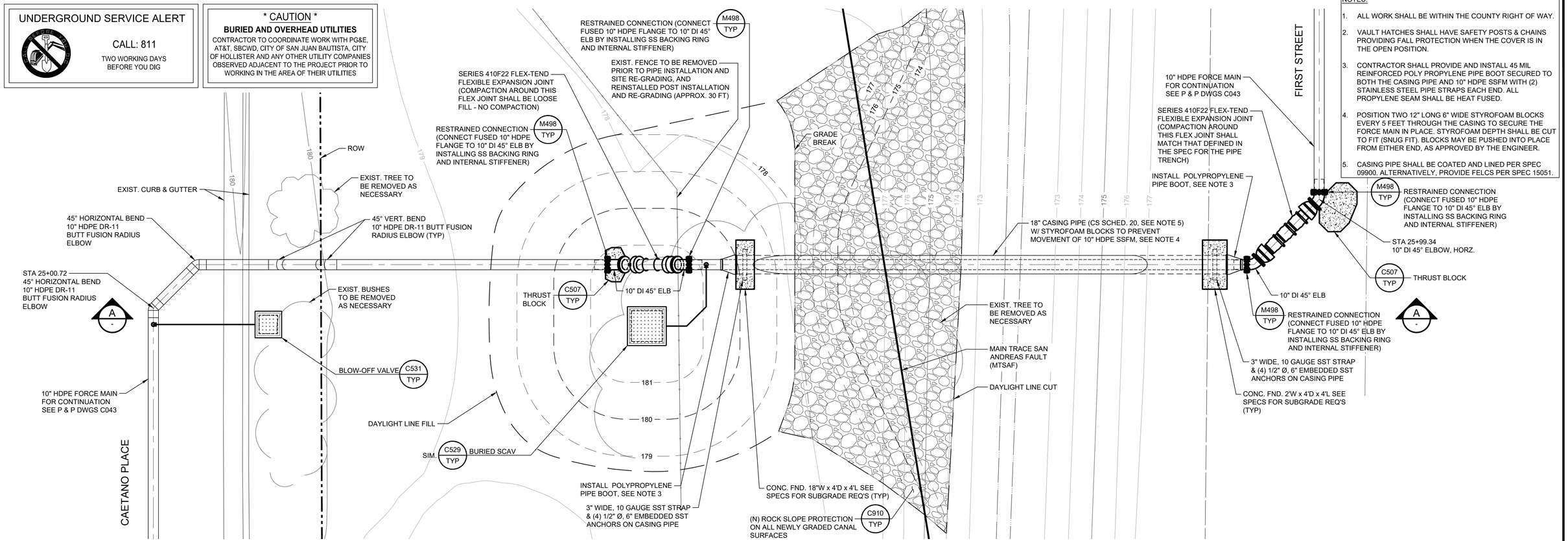

PIPE CROSSING AT CREEK ALONG FIRST STREET - PLAN

SCALE: 1/4"=1'-0"

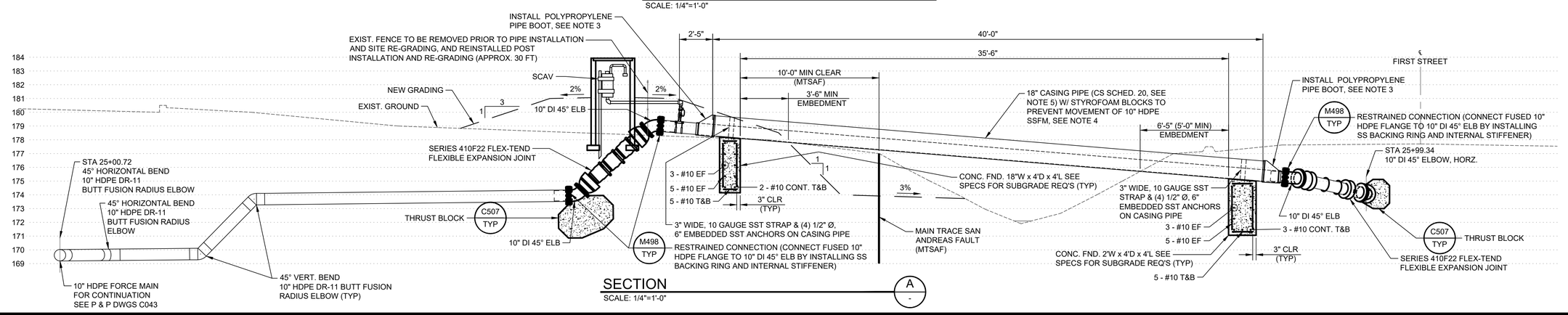

SECTION

SCALE: 1/4"=1'-0"

A -

Revision	By	Appd.	YY.MM.DD
BID SET	KM	GIA	2022.12.30
PERMIT SET	KM	GIA	2022.10.10
Issued	By	Appd	YYYY.MM.DD

Permit/Seal

REGISTERED PROFESSIONAL ENGINEER GABRIEL I. ARONOW No.55607 Exp.12/31/24 CIVIL STATE OF CALIFORNIA

12/30/2022

Consultant

Stantec

Stantec Consulting Services Inc.
3875 Atherton Road
Rocklin CA 95765-3716
Tel: (916) 773-8100
www.stantec.com

Copyright Reserved

The Contractor shall verify and be responsible for all dimensions. DO NOT scale the drawing - any errors or omissions shall be reported to Stantec without delay. The Copyrights to all designs and drawings are the property of Stantec. Reproduction or use for any purpose other than that authorized by Stantec is forbidden.

Client/Project Logo

Client/Project

City of San Juan Bautista

SANITARY SEWER FORCE MAIN TO HOLLISTER PROJECT

San Juan Bautista, California

File Name: 31441-C027 & C028 | AV Dwn. | KM Dsgn. | GIA Chkd. | 2022.12.30 YYYY.MM.DD

Title

AERIAL PIPE CROSSING AT CREEK ALONG FIRST STREET PLAN AND SECTION

Project No. 184031441

Scale AS SHOWN

Revision 0

Sheet 28 of 128

Drawing No. C027

ORIGINAL SHEET - ANSI D

\\<LAN\Projects\184031441\Drawing\dwt\31441-C027 & C028 2022.03.17 2:22:29 PM AM

UNDERGROUND SERVICE ALERT

CALL: 811

TWO WORKING DAYS BEFORE YOU DIG

*** CAUTION ***

BURIED AND OVERHEAD UTILITIES

CONTRACTOR TO COORDINATE WORK WITH PG&E, AT&T, SBCWD, CITY OF SAN JUAN BAUTISTA, CITY OF HOLLISTER AND ANY OTHER UTILITY COMPANIES OBSERVED ADJACENT TO THE PROJECT PRIOR TO WORKING IN THE AREA OF THEIR UTILITIES

NOTES:

1. ALL WORK SHALL BE WITHIN THE COUNTY RIGHT OF WAY.
2. VAULT HATCHES SHALL HAVE SAFETY POSTS & CHAINS PROVIDING FALL PROTECTION WHEN THE COVER IS IN THE OPEN POSITION.
3. CONTRACTOR SHALL PROVIDE AND INSTALL 45 MIL REINFORCED POLY PROPYLENE PIPE BOOT SECURED TO BOTH THE CASING PIPE AND 10" HDPE SSFM WITH (2) STAINLESS STEEL PIPE STRAPS EACH END. ALL PROPYLENE SEAM SHALL BE HEAT FUSED.
4. POSITION TWO 12" LONG 6" WIDE STYROFOAM BLOCKS EVERY 5 FEET THROUGH THE CASING TO SECURE THE FORCE MAIN IN PLACE. STYROFOAM DEPTH SHALL BE CUT TO FIT (SNUG FIT). BLOCKS MAY BE PUSHED INTO PLACE FROM EITHER END, AS APPROVED BY THE ENGINEER.
5. FORCE MAIN SHALL BE SHIELDED FROM REBAR WITH 1/2" THICK HYPOLON PANEL TO PREVENT RUBBING. HYPOLON MAY BE ADHERED TO THE FORCE MAIN WITH MASTIC PRIOR TO PLACEMENT IN THE CASING PIPE.
6. A TRUCK WITH 33 FOOT TRAILER SHALL DRIVE IN AND OUT OF DIRT ROAD WEST OF THE CREEK, BOTH FROM AND TO NORTHEAST AND SOUTHWEST BOUND OF PRESCOTT ROAD.
7. A TRUCK WITH 33 FOOT TRAILER SHALL DRIVE INTO THE DRIVEWAY EAST OF THE CREEK FROM SOUTHWEST BOUND, AND DRIVE OUT TO THE NORTHEAST BOUND OF PRESCOTT ROAD.
8. CASING PIPE SHALL BE COATED AND LINED PER SPEC 09900. ALTERNATIVELY, PROVIDE FELCS PER SPEC 15051.

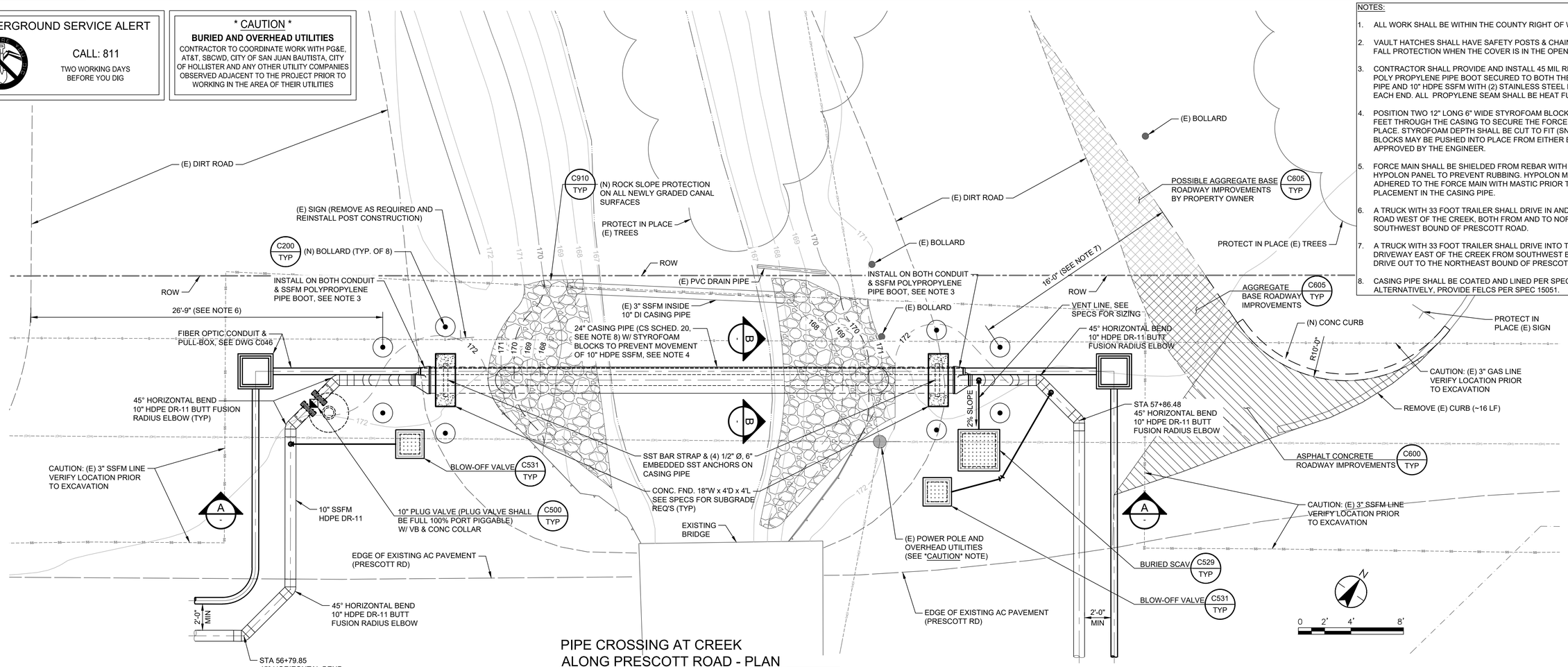

PIPE CROSSING AT CREEK ALONG PRESCOTT ROAD - PLAN

SCALE: 1/4"=1'-0"

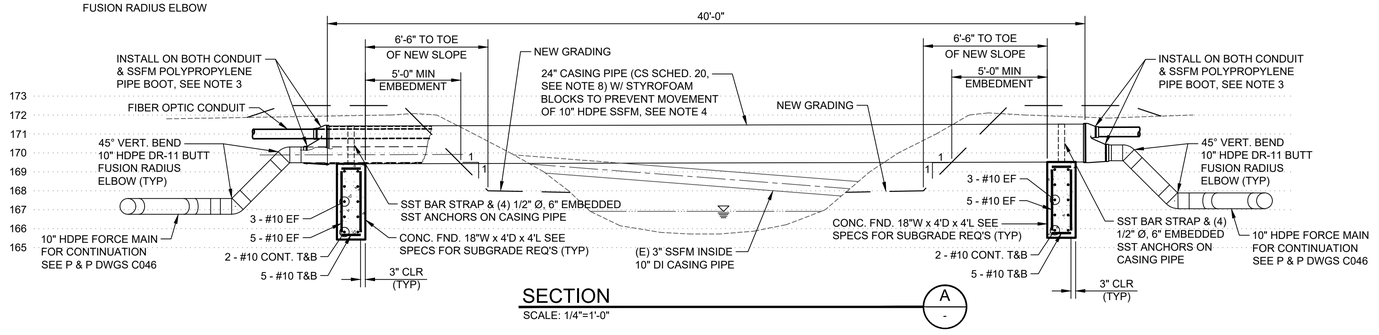

SECTION

SCALE: 1/4"=1'-0"

A -

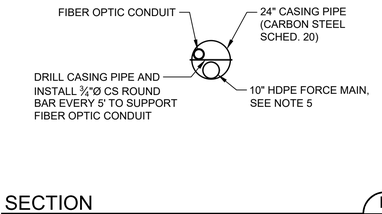

SECTION

SCALE: 1/4"=1'-0"

B -

Revision	By	Appd.	YY.MM.DD

Issued	By	Appd	YYYY.MM.DD
BID SET	KM	GIA	2022.12.30
PERMIT SET	KM	GIA	2022.10.10

Permit/Seal

REGISTERED PROFESSIONAL ENGINEER GABRIEL I. ARONOW No.55607 Exp.12/31/24 CIVIL STATE OF CALIFORNIA

12/30/2022

Consultant

Client/Project Logo

Stantec

Stantec Consulting Services Inc.
3875 Atherton Road
Rocklin CA 95765-3716
Tel: (916) 773-8100
www.stantec.com

Copyright Reserved

The Contractor shall verify and be responsible for all dimensions. DO NOT scale the drawing - any errors or omissions shall be reported to Stantec without delay. The Copyrights to all designs and drawings are the property of Stantec. Reproduction or use for any purpose other than that authorized by Stantec is forbidden.

Client/Project

City of San Juan Bautista

SANITARY SEWER FORCE MAIN TO HOLLISTER PROJECT

San Juan Bautista, California

File Name: 31441-C027 & C028 | AV Dwn. | KM Dsgn. | GIA Chkd. | 2022.12.30 YYYY.MM.DD

Title

AERIAL PIPE CROSSING AT CREEK ALONG PRESCOTT ROAD PLAN AND SECTION

Project No. 184031441

Scale AS SHOWN

Revision 0

Sheet 29 of 128

Drawing No. C028

ORIGINAL SHEET - ANSI D

v:\184\active\184031441\drawing\sct\31441-c027 & c028 2023.01.12 7:24 AM

NOTES:

1. REFER TO DESIGN BUILD KEY NOTE 1 ON SHEET S100 FOR DESIGN BUILD AND STRUCTURAL DESIGN INFORMATION.

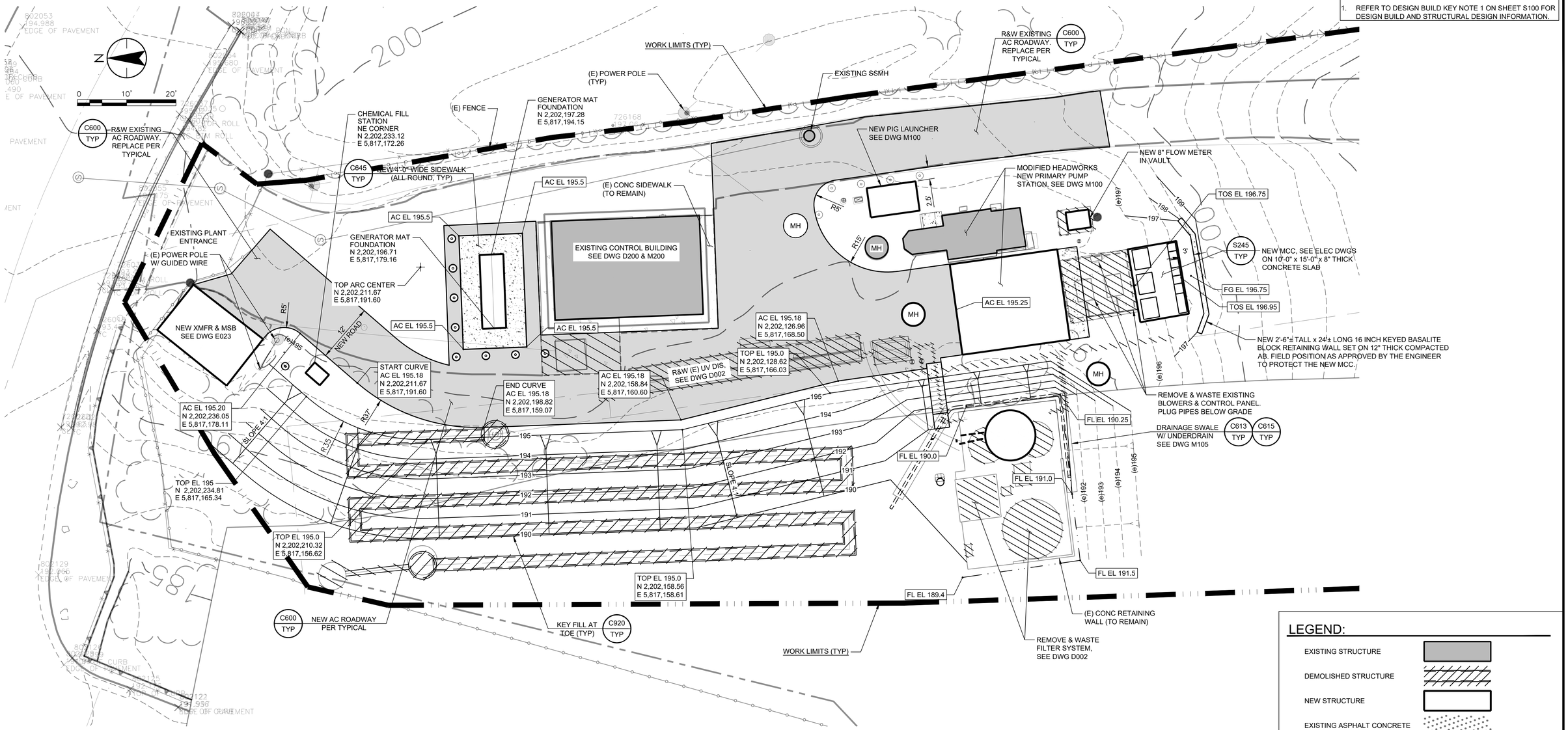

LEGEND:

- EXISTING STRUCTURE
- DEMOLISHED STRUCTURE
- NEW STRUCTURE
- EXISTING ASPHALT CONCRETE
- NEW & REPLACED ASPHALT CONCRETE
- NEW CONCRETE
- NEW CONTOUR LINES
- EXISTING CONTOUR LINES

Revision	By	Appd.	YY.MM.DD
PERMIT SET	KM	GIA	2022.10.10
Issued	By	Appd	YYYY.MM.DD

Permit/Seal

REGISTERED PROFESSIONAL ENGINEER GABRIEL T. ARONOW No.55607 Exp.12/31/22 CIVIL STATE OF CALIFORNIA

09/01/2022

Consultant

Stantec

Stantec Consulting Services Inc.
3875 Atherton Road
Rocklin CA 95765-3716
Tel: (916) 773-8100
www.stantec.com

Copyright Reserved

The Contractor shall verify and be responsible for all dimensions. DO NOT scale the drawing - any errors or omissions shall be reported to Stantec without delay. The Copyrights to all designs and drawings are the property of Stantec. Reproduction or use for any purpose other than that authorized by Stantec is forbidden.

Client/Project Logo

Client/Project

City of San Juan Bautista

SANITARY SEWER FORCE MAIN TO HOLLISTER PROJECT

San Juan Bautista, California

File Name: 31441-C031	ASB	KM	GIA	2022.10.10
	Dwn.	Dsgn.	Chkd.	YYYY.MM.DD

Title

GRADING AND PAVING PLAN

Project No.	Scale
184031441	1" = 10'

Revision	Sheet	Drawing No.
0	30 of 128	C031

v:\1845\active\184031441\drawing\sct\31441-c031 2022.10.27 1:12:03 AM

ORIGINAL SHEET - ANSI D

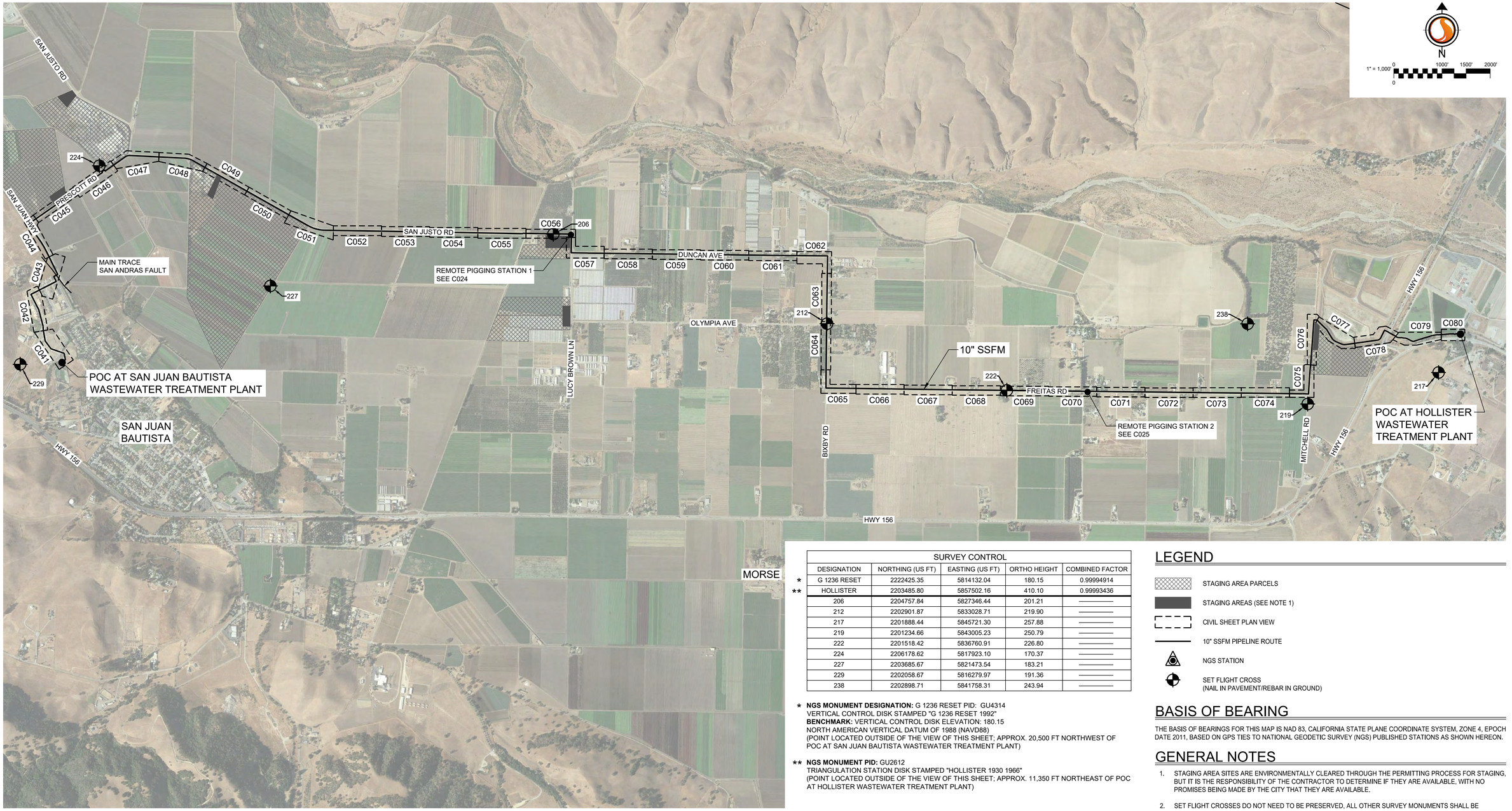

SURVEY CONTROL					
	DESIGNATION	NORTHING (US FT)	EASTING (US FT)	ORTHO HEIGHT	COMBINED FACTOR
*	G 1236 RESET	2222425.35	5814132.04	180.15	0.99994914
**	HOLLISTER	2203485.80	5857502.16	410.10	0.99993436
	206	2204757.84	5827346.44	201.21	————
	212	2202901.87	5833028.71	219.90	————
	217	2201888.44	5845721.30	257.88	————
	219	2201234.66	5843005.23	250.79	————
	222	2201518.42	5836760.91	226.80	————
	224	2206178.62	5817923.10	170.37	————
	227	2203685.67	5821473.54	183.21	————
	229	2202058.67	5816279.97	191.36	————
	238	2202898.71	5841758.31	243.94	————

* **NGS MONUMENT DESIGNATION:** G 1236 RESET PID: GU4314
VERTICAL CONTROL DISK STAMPED "G 1236 RESET 1992"
BENCHMARK: VERTICAL CONTROL DISK ELEVATION: 180.15
NORTH AMERICAN VERTICAL DATUM OF 1988 (NAVD88)
(POINT LOCATED OUTSIDE OF THE VIEW OF THIS SHEET; APPROX. 20,500 FT NORTHWEST OF POC AT SAN JUAN BAUTISTA WASTEWATER TREATMENT PLANT)

** **NGS MONUMENT PID:** GU2612
TRIANGULATION STATION DISK STAMPED "HOLLISTER 1930 1966"
(POINT LOCATED OUTSIDE OF THE VIEW OF THIS SHEET; APPROX. 11,350 FT NORTHEAST OF POC AT HOLLISTER WASTEWATER TREATMENT PLANT)

LEGEND

- STAGING AREA PARCELS
- STAGING AREAS (SEE NOTE 1)
- CIVIL SHEET PLAN VIEW
- 10" SSFM PIPELINE ROUTE
- NGS STATION
- SET FLIGHT CROSS (NAIL IN PAVEMENT/REBAR IN GROUND)

BASIS OF BEARING

THE BASIS OF BEARINGS FOR THIS MAP IS NAD 83, CALIFORNIA STATE PLANE COORDINATE SYSTEM, ZONE 4, EPOCH DATE 2011, BASED ON GPS TIES TO NATIONAL GEODETIC SURVEY (NGS) PUBLISHED STATIONS AS SHOWN HEREON.

GENERAL NOTES

1. STAGING AREA SITES ARE ENVIRONMENTALLY CLEARED THROUGH THE PERMITTING PROCESS FOR STAGING, BUT IT IS THE RESPONSIBILITY OF THE CONTRACTOR TO DETERMINE IF THEY ARE AVAILABLE, WITH NO PROMISES BEING MADE BY THE CITY THAT THEY ARE AVAILABLE.
2. SET FLIGHT CROSSES DO NOT NEED TO BE PRESERVED, ALL OTHER SURVEY MONUMENTS SHALL BE PRESERVED AND RESET IF DISTURBED OR DESTROYED DURING CONSTRUCTION. SEE PLAN AND PROFILE SHEETS FOR LOCATIONS OF SURVEY MONUMENTS TO BE PRESERVED.

Revision	By	Appd.	YY.MM.DD

Issued	By	Appd	YYYY.MM.DD
BID SET	KM	GIA	2022.12.30
PERMIT SET	KM	GIA	2022.10.10

Permit/Seal

LICENSED PROFESSIONAL ENGINEER
GABRIEL I. ARONOW
No. 55807
Exp.12/31/24
CIVIL
STATE OF CALIFORNIA

12/30/2022

Consultant

Stantec
Stantec Consulting Services Inc.
3875 Atherton Road
Rocklin CA 95765-3716
Tel: (916) 773-8100
www.stantec.com

Copyright Reserved
The Contractor shall verify and be responsible for all dimensions. DO NOT scale the drawing - any errors or omissions shall be reported to Stantec without delay.
The Copyrights to all designs and drawings are the property of Stantec. Reproduction or use for any purpose other than that authorized by Stantec is forbidden.

Client/Project Logo

Client/Project

City of San Juan Bautista

SANITARY SEWER FORCE MAIN
TO HOLLISTER PROJECT

San Juan Bautista, California

File Name: 31441-C040 | AV Dwn. | KM, AV Dsgn. | GIA Chkd. | 2022.12.30 YYYY.MM.DD

Title

CIVIL SHEET KEY,
SURVEY CONTROL INFO. &
DESIGNATED STAGING AREAS MAP

Project No. 184031441 | Scale 1" = 1,000'

Revision 0 | Sheet 31 of 128 | Drawing No. C040

ORIGINAL SHEET - ANSI D

\\<1.1MR\Jobs\<1.1M031441\Cad\dwg\Set\31441-C040 2022.01.12 7:39:49 AM

UNDERGROUND SERVICE ALERT

CALL: 811

TWO WORKING DAYS BEFORE YOU DIG

*** CAUTION ***

BURIED AND OVERHEAD UTILITIES

CONTRACTOR TO COORDINATE WORK WITH PG&E, AT&T, SBCWD, CITY OF SAN JUAN BAUTISTA, CITY OF HOLLISTER AND ANY OTHER UTILITY COMPANIES OBSERVED ADJACENT TO THE PROJECT PRIOR TO WORKING IN THE AREA OF THEIR UTILITIES

CONSTRUCTION NOTES

1. NEW 10"Ø HDPE DR-11 SSFM SHALL BE SLIPPED INTO EXISTING 18" CASING PIPE, PLACED ON THE BOTTOM OF THE CASING PIPE AND THE VOID FILLED WITH 2-SACK CONCRETE SLURRY. BOTH ENDS OF EACH SECTION OF 18" CASING PIPE SHALL BE PLUGGED WITH 2 FEET OF CONCRETE.
2. EXISTING UNDERGROUND UTILITY LOCATIONS AND DEPTHS ARE APPROXIMATE AND BASED ON AVAILABLE AS-BUILT INFORMATION. CONTRACTOR TO POTHOLE AND VERIFY EXACT LOCATIONS AND DEPTHS THREE DAYS MINIMUM PRIOR TO COMMENCEMENT OF WORK, AND NOTIFY ENGINEER OF ANY DISCREPANCIES.
3. CITY OF SAN JUAN BAUTISTA MONUMENTS SHALL BE PRESERVED AND RESET PER CITY OF HOLLISTER STANDARD PLAN A-16 (SEE DWG C004) IF IT GETS DISTURBED OR DESTROYED DURING CONSTRUCTION.
4. BACKFILL EXCAVATED PIT WITH ENGINEERED FILL TO 95% COMPACTION.
5. BUTT FUSION ELBOWS SHALL BE RADIUS ELBOWS (NOT MITERED ELBOWS).

GENERAL NOTES

1. SEE DWG C081 FOR NEW SSFM ALIGNMENT CURVE AND LINE TABLES.
2. ALL WORK MUST BE COMPLETED WITHIN THE ROW, OUTSIDE OF DRAINAGE DITCHES. NO WORK OR ACCESS IS ALLOWED IN THE DRAINAGE DITCHES.
3. SEE DWG C003 FOR AC OVERLAY, PAVING, PIPE TRENCH DETAILS, AND CONDUIT TRENCH DETAILS.

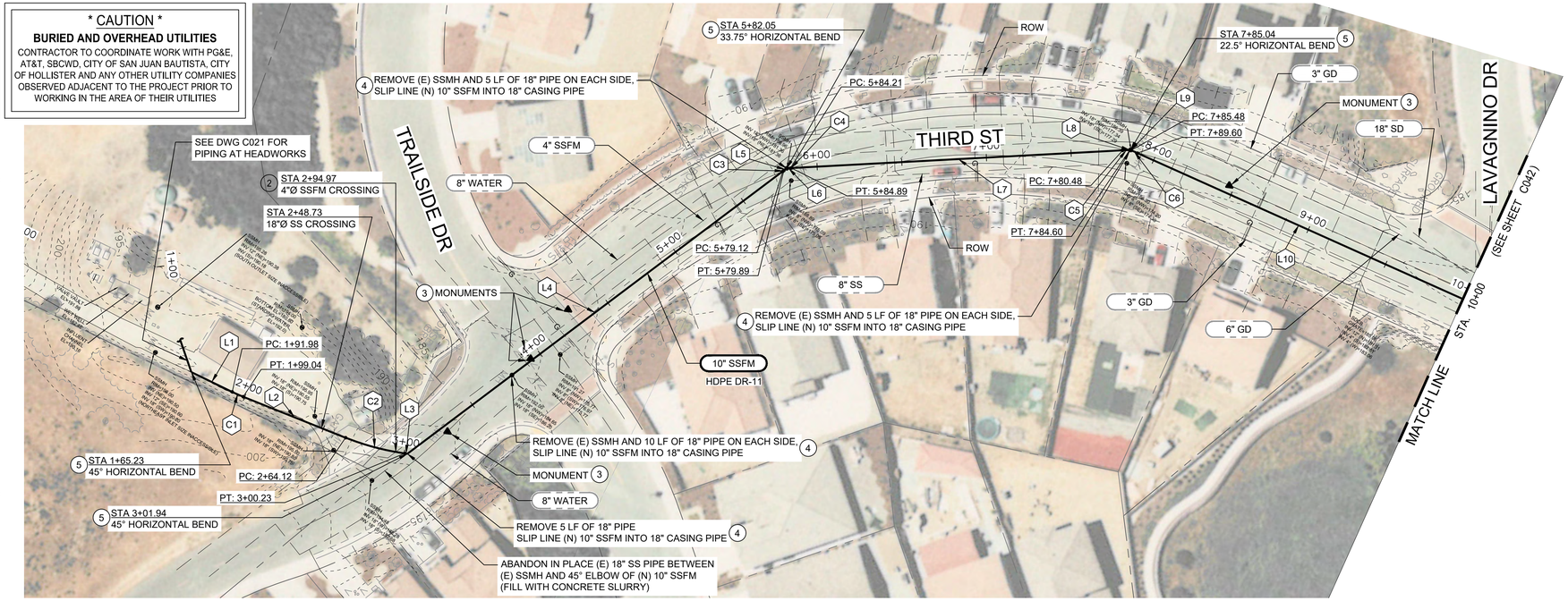

1"=40'H

PLAN VIEW LEGEND

EXISTING PIPE — 8" SS

NEW PIPE — 10" SSFM

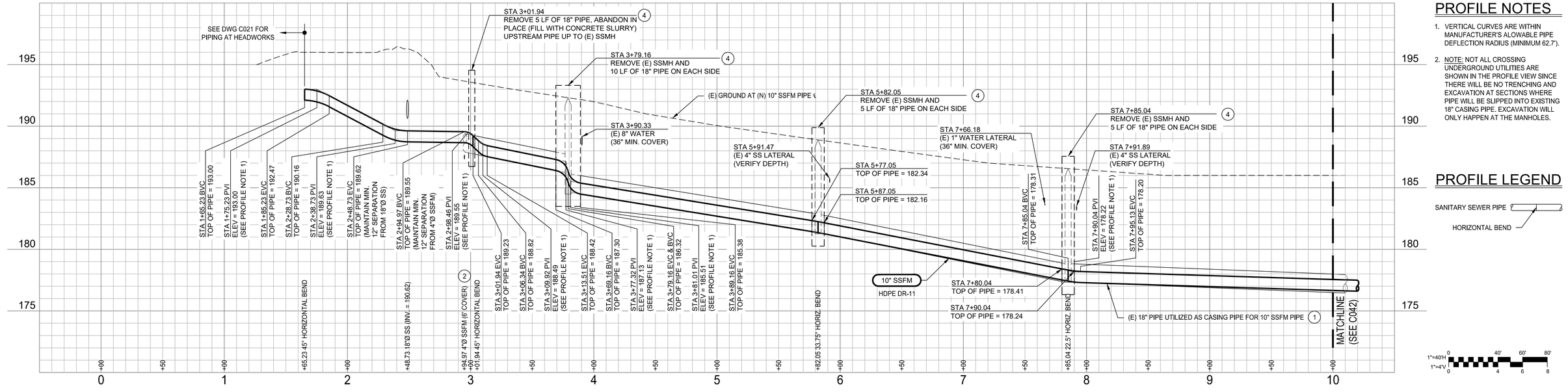

PROFILE NOTES

1. VERTICAL CURVES ARE WITHIN MANUFACTURER'S ALOWABLE PIPE DEFLECTION RADIUS (MINIMUM 62.7').
2. NOTE: NOT ALL CROSSING UNDERGROUND UTILITIES ARE SHOWN IN THE PROFILE VIEW SINCE THERE WILL BE NO TRENCHING AND EXCAVATION AT SECTIONS WHERE PIPE WILL BE SLIPPED INTO EXISTING 18" CASING PIPE. EXCAVATION WILL ONLY HAPPEN AT THE MANHOLES.

PROFILE LEGEND

SANITARY SEWER PIPE

HORIZONTAL BEND

1"=40'H
1"=4'V

Revision	By	Appd.	YY.MM.DD
BID SET	KM	GIA	2022.12.30
PERMIT SET	KM	GIA	2022.10.10
Issued	By	Appd	YYYY.MM.DD

Permit/Seal

REGISTERED PROFESSIONAL ENGINEER — GABRIEL I. ARONOW — No.55807 — Exp.12/31/24 — CIVIL — STATE OF CALIFORNIA

12/30/2022

Consultant

Stantec

Stantec Consulting Services Inc.
3875 Atherton Road
Rocklin CA 95765-3716
Tel: (916) 773-8100
www.stantec.com

Copyright Reserved

The Contractor shall verify and be responsible for all dimensions. DO NOT scale the drawing - any errors or omissions shall be reported to Stantec without delay. The Copyrights to all designs and drawings are the property of Stantec. Reproduction or use for any purpose other than that authorized by Stantec is forbidden.

Client/Project Logo

Client/Project

City of San Juan Bautista

SANITARY SEWER FORCE MAIN TO HOLLISTER PROJECT

San Juan Bautista, California

File Name: 31441-C041-C050	AV	KM, AV	GIA	2022.12.30
	Dwn.	Dsgn.	Chkd.	YYYY.MM.DD

Title

PLAN AND PROFILE
SJBWWTP SITE AND THIRD ST
STA. 0+00 TO 10+00

Project No.	Scale
184031441	AS SHOWN
Revision	Sheet
0	32 of 128

Drawing No.

C041

ORIGINAL SHEET - ANSI D

\\<\LMR\ca\hm\184031441\Drawing\civil\31441-C041-C050 2023.01.12 7:34:21 AM

UNDERGROUND SERVICE ALERT

CALL: 811

TWO WORKING DAYS BEFORE YOU DIG

*** CAUTION ***

BURIED AND OVERHEAD UTILITIES

CONTRACTOR TO COORDINATE WORK WITH PG&E, AT&T, SBCWD, CITY OF SAN JUAN BAUTISTA, CITY OF HOLLISTER AND ANY OTHER UTILITY COMPANIES OBSERVED ADJACENT TO THE PROJECT PRIOR TO WORKING IN THE AREA OF THEIR UTILITIES

CONSTRUCTION NOTES

1. NEW 10"Ø HDPE DR-11 SSFM SHALL BE SLIPPED INTO EXISTING 18" CASING PIPE, PLACED ON THE BOTTOM OF THE CASING PIPE AND THE VOID FILLED WITH 2-SACK CONCRETE SLURRY. BOTH ENDS OF EACH SECTION OF 18" CASING PIPE SHALL BE PLUGGED WITH 2 FEET OF CONCRETE.
2. CITY OF SAN JUAN BAUTISTA MONUMENTS SHALL BE PRESERVED AND RESET PER CITY OF HOLLISTER STANDARD PLAN A-16 (SEE DWG C004) IF IT GETS DISTURBED OR DESTROYED DURING CONSTRUCTION.
3. BACKFILL EXCAVATED PIT WITH ENGINEERED FILL TO 95% COMPACTION.
4. BUTT FUSION ELBOWS SHALL BE RADIUS ELBOWS (NOT MITERED ELBOWS).

GENERAL NOTES

1. SEE DWG C081 FOR NEW SSFM ALIGNMENT CURVE AND LINE TABLES.
2. ALL WORK MUST BE COMPLETED WITHIN THE ROW, OUTSIDE OF DRAINAGE DITCHES. NO WORK OR ACCESS IS ALLOWED IN THE DRAINAGE DITCHES.
3. SEE DWG C003 FOR AC OVERLAY, PAVING, PIPE TRENCH DETAILS, AND CONDUIT TRENCH DETAILS.

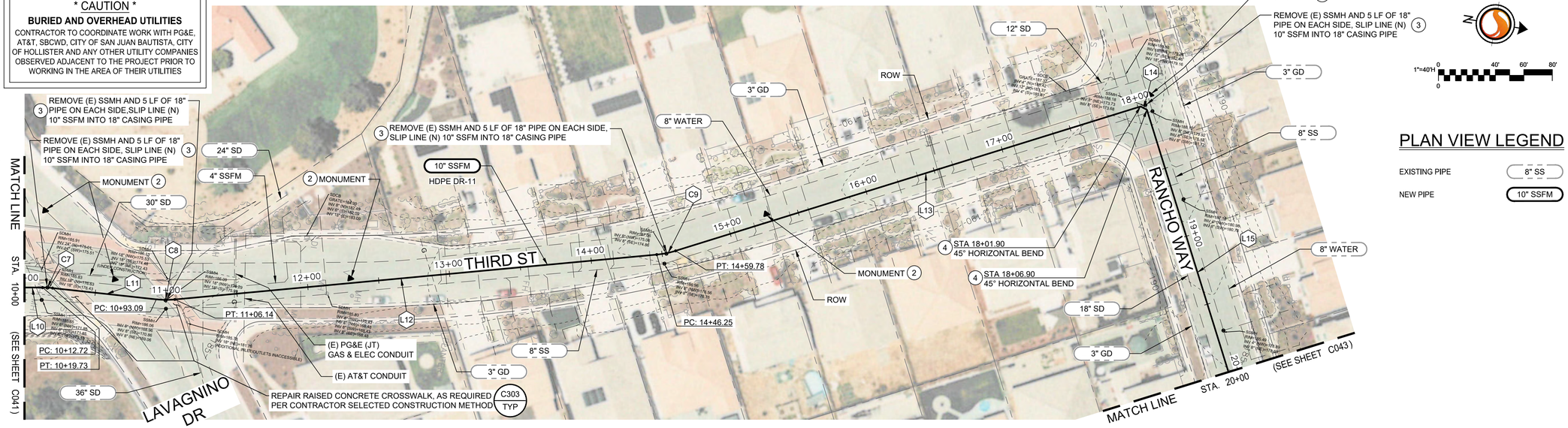

PLAN VIEW LEGEND

EXISTING PIPE — 8" SS

NEW PIPE — 10" SSFM

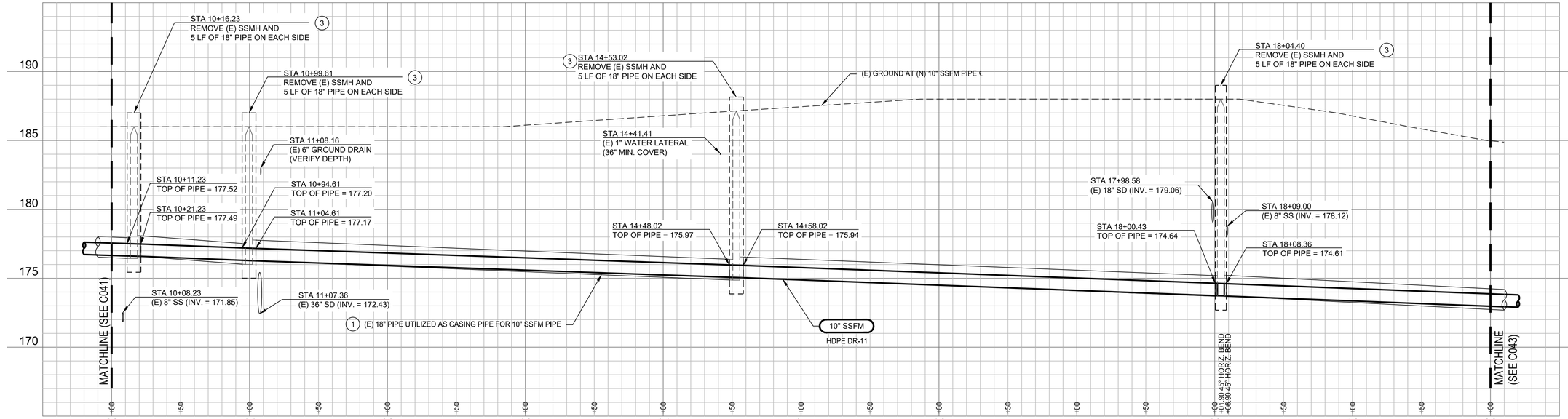

PROFILE NOTES

1. VERTICAL CURVES ARE WITHIN MANUFACTURER'S ALOWABLE PIPE DEFLECTION RADIUS (MINIMUM 62.7').
2. NOTE: NOT ALL CROSSING UNDERGROUND UTILITIES ARE SHOWN IN THE PROFILE VIEW SINCE THERE WILL BE NO TRENCHING AND EXCAVATION AT SECTIONS WHERE PIPE WILL BE SLIPPED INTO EXISTING 18" CASING PIPE. EXCAVATION WILL ONLY HAPPEN AT THE MANHOLES.

PROFILE LEGEND

SANITARY SEWER PIPE

HORIZONTAL BEND

Revision	By	Appd.	YY.MM.DD
BID SET	KM	GIA	2022.12.30
PERMIT SET	KM	GIA	2022.10.10
Issued	By	Appd	YYYY.MM.DD

Permit/Seal

REGISTERED PROFESSIONAL ENGINEER GABRIEL I. ARONOW No.55607 Exp.12/31/24 STATE OF CALIFORNIA CIVIL

12/30/2022

Consultant

Stantec

Stantec Consulting Services Inc.
3875 Atherton Road
Rocklin CA 95765-3716
Tel: (916) 773-8100
www.stantec.com

Copyright Reserved

The Contractor shall verify and be responsible for all dimensions. DO NOT scale the drawing - any errors or omissions shall be reported to Stantec without delay. The Copyrights to all designs and drawings are the property of Stantec. Reproduction or use for any purpose other than that authorized by Stantec is forbidden.

Client/Project Logo

Client/Project

City of San Juan Bautista

SANITARY SEWER FORCE MAIN TO HOLLISTER PROJECT

San Juan Bautista, California

File Name: 31441-C041-C050	AV	KM, AV	GIA	2022.12.30
	Dwn.	Dsgn.	Chkd.	YYYY.MM.DD

Title

PLAN AND PROFILE
THIRD ST AND RANCHO WAY
STA. 10+00 TO 20+00

Project No.	Scale
184031441	AS SHOWN
Revision	Sheet
0	33 of 128

Drawing No. C042

ORIGINAL SHEET - ANSI D

\\<\1MP\Jobs\1M\03\184031441\Drawing\civil\31441-C041-C050 2023.01.12 7:35:57 AM

UNDERGROUND SERVICE ALERT

CALL: 811

TWO WORKING DAYS BEFORE YOU DIG

CONSTRUCTION NOTES

1. NEW 10"Ø HDPE DR-11 SSFM SHALL BE SLIPPED INTO EXISTING 18" CASING PIPE, PLACED ON THE BOTTOM OF THE CASING PIPE AND THE VOID FILLED WITH 2-SACK CONCRETE SLURRY. BOTH ENDS OF EACH SECTION OF 18" CASING PIPE SHALL BE PLUGGED WITH 2 FEET OF CONCRETE.
2. EXISTING UNDERGROUND UTILITY LOCATIONS AND DEPTHS ARE APPROXIMATE AND BASED ON AVAILABLE AS-BUILT INFORMATION. CONTRACTOR TO POTHOLE AND VERIFY EXACT LOCATIONS AND DEPTHS THREE DAYS MINIMUM PRIOR TO COMMENCEMENT OF WORK, AND NOTIFY ENGINEER OF ANY DISCREPANCIES.
3. CITY OF SAN JUAN BAUTISTA MONUMENTS SHALL BE PRESERVED AND RESET PER CITY OF HOLLISTER STANDARD PLAN A-16 (SEE DWG C004) IF IT GETS DISTURBED OR DESTROYED DURING CONSTRUCTION.
4. BACKFILL EXCAVATED PIT WITH ENGINEERED FILL TO 95% COMPACTION.
5. BUTT FUSION ELBOWS SHALL BE RADIUS ELBOWS (NOT MITERED ELBOWS).

GENERAL NOTES

1. SEE DWG C081 FOR NEW SSFM ALIGNMENT CURVE AND LINE TABLES.
2. ALL WORK MUST BE COMPLETED WITHIN THE ROW, OUTSIDE OF DRAINAGE DITCHES. NO WORK OR ACCESS IS ALLOWED IN THE DRAINAGE DITCHES.
3. PROVIDE STAKES FOR THE 10" HDPE SSFM AT 250 FT INTERVALS AND AT ALL CHANGES IN ALIGNMENT, END OF PIPE AND BURIED VALVES. STAKES MAY BE OFFSET TO AVOID DRIVE AREAS (IN THE SHOULDER) AS APPROVED BY THE ENGINEER. NO STAKES ARE REQUIRED THROUGH THE RANCHO VISTA DEVELOPMENT.
4. SEE DWG C003 FOR AC OVERLAY, PAVING, PIPE TRENCH DETAILS, AND CONDUIT TRENCH DETAILS.

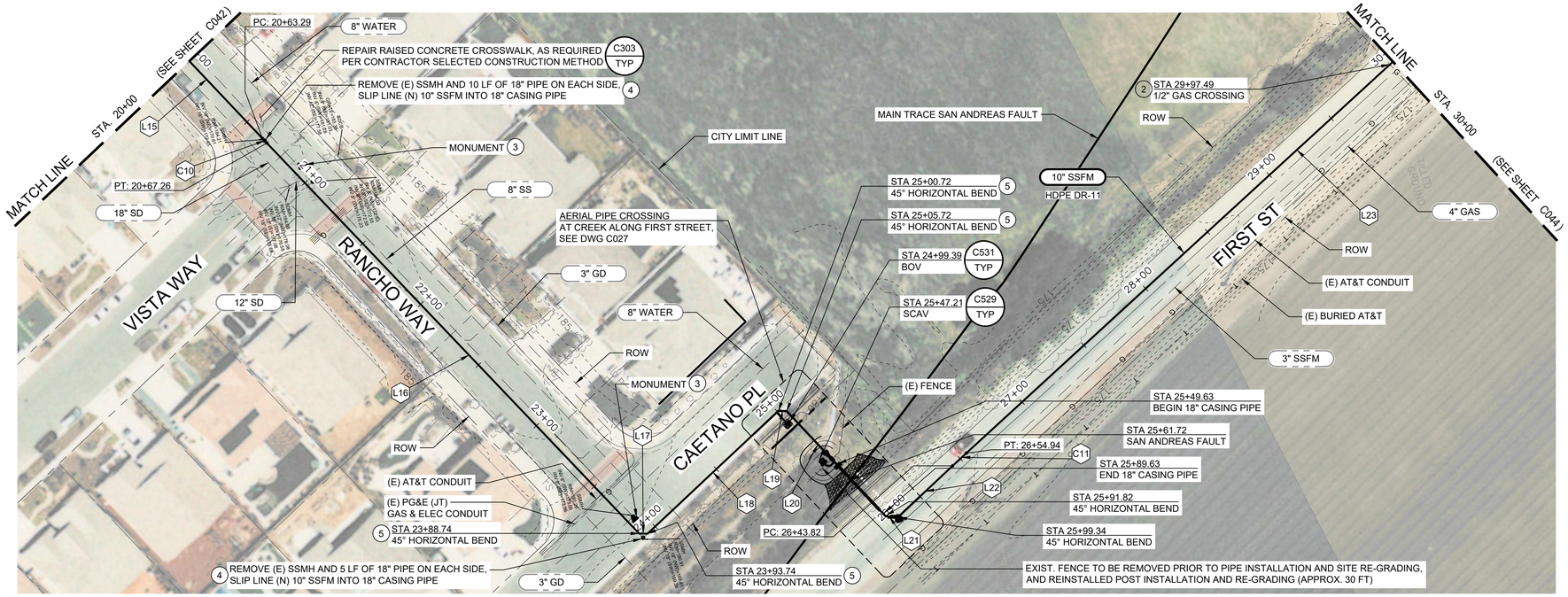

PLAN VIEW LEGEND

EXISTING PIPE — 8" SS

NEW PIPE — 10" SSFM

* CAUTION *

BURIED AND OVERHEAD UTILITIES

CONTRACTOR TO COORDINATE WORK WITH PG&E, AT&T, SBCWD, CITY OF SAN JUAN BAUTISTA, CITY OF HOLLISTER AND ANY OTHER UTILITY COMPANIES OBSERVED ADJACENT TO THE PROJECT PRIOR TO WORKING IN THE AREA OF THEIR UTILITIES

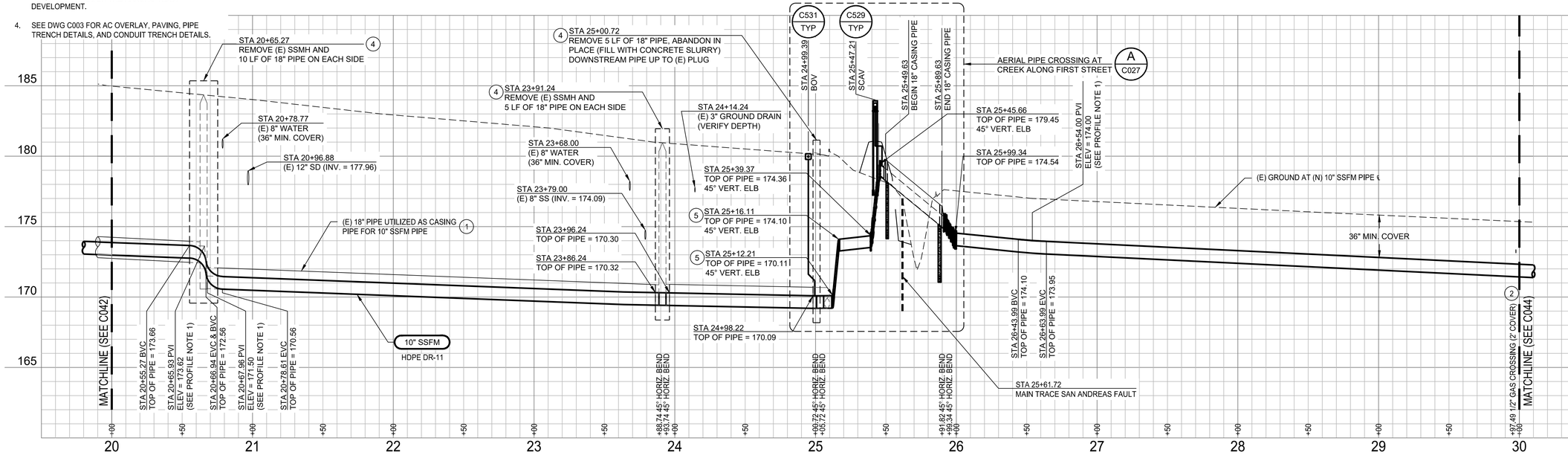

PROFILE NOTES

1. VERTICAL CURVES ARE WITHIN MANUFACTURER'S ALOWABLE PIPE DEFLECTION RADIUS (MINIMUM 62.7').
2. NOTE: NOT ALL CROSSING UNDERGROUND UTILITIES ARE SHOWN IN THE PROFILE VIEW SINCE THERE WILL BE NO TRENCHING AND EXCAVATION AT SECTIONS WHERE PIPE WILL BE SLIPPED INTO EXISTING 18" CASING PIPE. EXCAVATION WILL ONLY HAPPEN AT THE MANHOLES.

PROFILE LEGEND

SANITARY SEWER PIPE

HORIZONTAL BEND

Revision	By	Appd.	YY.MM.DD
BID SET	KM	GIA	2022.12.30
PERMIT SET	KM	GIA	2022.10.10
Issued	By	Appd	YYYY.MM.DD

Permit/Seal

REGISTERED PROFESSIONAL ENGINEER — GABRIEL I. ARONOW — No.55607 — Exp.12/31/24 — CIVIL — STATE OF CALIFORNIA

12/30/2022

Consultant

Stantec

Stantec Consulting Services Inc.
3875 Atherton Road
Rocklin CA 95765-3716
Tel: (916) 773-8100
www.stantec.com

Copyright Reserved

The Contractor shall verify and be responsible for all dimensions. DO NOT scale the drawing - any errors or omissions shall be reported to Stantec without delay. The Copyrights to all designs and drawings are the property of Stantec. Reproduction or use for any purpose other than that authorized by Stantec is forbidden.

Client/Project Logo

Client/Project

City of San Juan Bautista

SANITARY SEWER FORCE MAIN TO HOLLISTER PROJECT

San Juan Bautista, California

File Name: 31441-C041-C050	AV	KM, AV	GIA	2022.12.30
	Dwn.	Dsgn.	Chkd.	YYYY.MM.DD

Title

PLAN AND PROFILE - RANCHO WAY, CAETANO PL AND FIRST ST STA. 20+00 TO 30+00

Project No.	Scale
184031441	AS SHOWN
Revision	Sheet
0	34 of 128

Drawing No. C043

ORIGINAL SHEET - ANSI D

\\<1.SMD\.cpfs\v1.184031441\1\drawing\dgn\31441-c041-c050 2022.03.17 2:49:27 AM

UNDERGROUND SERVICE ALERT

CALL: 811

TWO WORKING DAYS BEFORE YOU DIG

* CAUTION *

BURIED AND OVERHEAD UTILITIES

CONTRACTOR TO COORDINATE WORK WITH PG&E, AT&T, SBCWD, CITY OF SAN JUAN BAUTISTA, CITY OF HOLLISTER AND ANY OTHER UTILITY COMPANIES OBSERVED ADJACENT TO THE PROJECT PRIOR TO WORKING IN THE AREA OF THEIR UTILITIES

GENERAL NOTES

1. SEE DWG C081 FOR NEW SSFM ALIGNMENT CURVE AND LINE TABLES.
2. ALL WORK MUST BE COMPLETED WITHIN THE ROW, OUTSIDE OF DRAINAGE DITCHES. NO WORK OR ACCESS IS ALLOWED IN THE DRAINAGE DITCHES.
3. PROVIDE STAKES FOR THE 10" HDPE SSFM AT 250 FT INTERVALS AND AT ALL CHANGES IN ALIGNMENT, END OF PIPE AND BURIED VALVES. STAKES MAY BE OFFSET TO AVOID DRIVE AREAS (IN THE SHOULDER) AS APPROVED BY THE ENGINEER.
4. SEE DWG C003 FOR AC OVERLAY, PAVING, PIPE TRENCH DETAILS, AND CONDUIT TRENCH DETAILS.

CONSTRUCTION NOTES

1. CAUTION: OVERHEAD ELECTRIC AND/OR COMMUNICATION UTILITY CROSSING.
2. PLACE PULL BOX IN THE MIDDLE OF BIKE LANE.
3. EXISTING UNDERGROUND UTILITY LOCATIONS AND DEPTHS ARE APPROXIMATE AND BASED ON AVAILABLE AS-BUILT INFORMATION. CONTRACTOR TO POTHOLE AND VERIFY EXACT LOCATIONS AND DEPTHS THREE DAYS MINIMUM PRIOR TO COMMENCEMENT OF WORK, AND NOTIFY ENGINEER OF ANY DISCREPANCIES.
4. BUTT FUSION ELBOWS SHALL BE RADIUS ELBOWS (NOT MITERED ELBOWS).

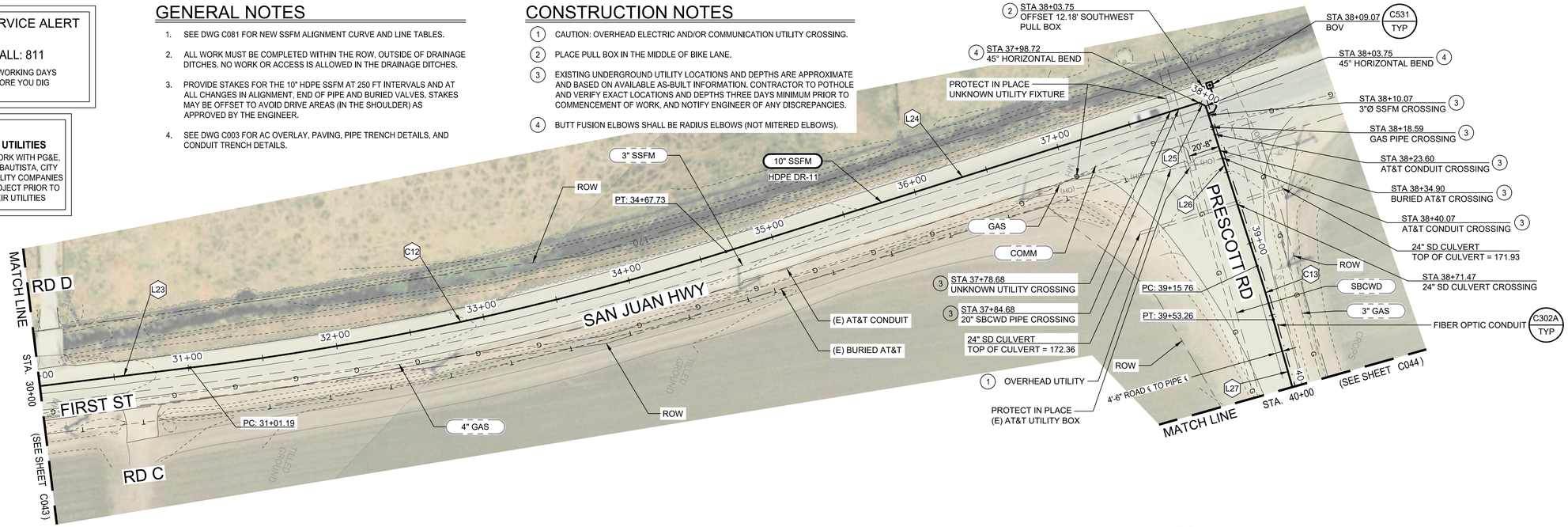

1"=40'H
1"=4'V

PLAN VIEW LEGEND

- EXISTING PIPE — 8" SS
- NEW PIPE — 10" SSFM
- FIBER OPTIC CONDUIT
- FIBER OPTIC PULL BOX

PROFILE NOTES

1. VERTICAL CURVES ARE WITHIN MANUFACTURER'S ALOWABLE PIPE DEFLECTION RADIUS (MINIMUM 62.7').
2. FIBER CONDUIT AND PULL BOXES NOT SHOWN, SEE PLAN VIEW AND SPECIFICATIONS. FOR UTILITY ELEVATION CONFLICTS, ADJUST IN THE FIELD AS APPROVED BY THE ENGINEER.

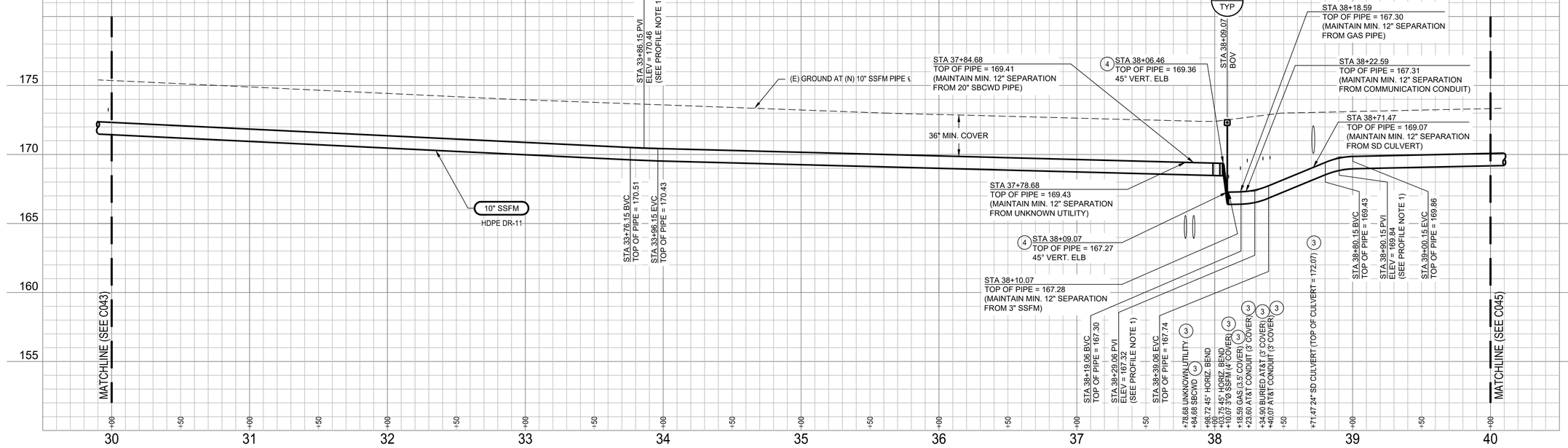

PROFILE LEGEND

- SANITARY SEWER PIPE
- HORIZONTAL BEND

1"=40'H
1"=4'V

Revision	By	Appd.	YY.MM.DD
BID SET	KM	GIA	2022.12.30
PERMIT SET	KM	GIA	2022.10.10
Issued	By	Appd	YYYY.MM.DD

Permit/Seal

REGISTERED PROFESSIONAL ENGINEER
GABRIEL I. ARONOW
No. 55807
Exp.12/31/24
CIVIL
STATE OF CALIFORNIA

12/30/2022

Consultant

Stantec

Stantec Consulting Services Inc.
3875 Atherton Road
Rocklin CA 95765-3716
Tel:(916) 773-8100
www.stantec.com

Copyright Reserved

The Contractor shall verify and be responsible for all dimensions. DO NOT scale the drawing - any errors or omissions shall be reported to Stantec without delay. The Copyrights to all designs and drawings are the property of Stantec. Reproduction or use for any purpose other than that authorized by Stantec is forbidden.

Client/Project Logo

Client/Project

City of San Juan Bautista

SANITARY SEWER FORCE MAIN TO HOLLISTER PROJECT

San Juan Bautista, California

File Name: 31441-C041-C050	AV	KM, AV	GIA	2022.12.30
	Dwn.	Dsgn.	Chkd.	YYYY.MM.DD

Title

PLAN AND PROFILE - FIRST ST/ SAN JUAN HWY AND PRESCOTT RD STA. 30+00 TO 40+00

Project No.	Scale
184031441	AS SHOWN
Revision	Sheet
0	35 of 128

Drawing No. C044

ORIGINAL SHEET - ANSI D

v:\1-Mdb.dgn\v1 184031441\drawing\gci\31441-c041-c050 2022.01.12 7:51:07 AM

UNDERGROUND SERVICE ALERT

CALL: 811

TWO WORKING DAYS BEFORE YOU DIG

*** CAUTION ***

BURIED AND OVERHEAD UTILITIES

CONTRACTOR TO COORDINATE WORK WITH PG&E, AT&T, SBCWD, CITY OF SAN JUAN BAUTISTA, CITY OF HOLLISTER AND ANY OTHER UTILITY COMPANIES OBSERVED ADJACENT TO THE PROJECT PRIOR TO WORKING IN THE AREA OF THEIR UTILITIES

CONSTRUCTION NOTES

1. CAUTION: OVERHEAD ELECTRIC AND/OR COMMUNICATION UTILITY CROSSING.
2. PLACE PULL BOXES IN THE SHOULDER, 3' OFF THE AC PAVEMENT, UNO.
3. EXISTING UNDERGROUND UTILITY LOCATIONS AND DEPTHS ARE APPROXIMATE AND BASED ON AVAILABLE AS-BUILT INFORMATION. CONTRACTOR TO POTHOLE AND VERIFY EXACT LOCATIONS AND DEPTHS THREE DAYS MINIMUM PRIOR TO COMMENCEMENT OF WORK, AND NOTIFY ENGINEER OF ANY DISCREPANCIES.
4. PLACE SCAV VALVE BOX IN THE SHOULDER, 3' OFF THE AC PAVEMENT, AND MAINTAIN 10' SEPARATION FROM EXISTING OVERHEAD UTILITY POLE.

GENERAL NOTES

1. SEE DWG C081 FOR NEW SSFM ALIGNMENT CURVE AND LINE TABLES.
2. ALL WORK MUST BE COMPLETED WITHIN THE ROW, OUTSIDE OF DRAINAGE DITCHES. NO WORK OR ACCESS IS ALLOWED IN THE DRAINAGE DITCHES.
3. PROVIDE STAKES FOR THE 10" HDPE SSFM AT 250 FT INTERVALS AND AT ALL CHANGES IN ALIGNMENT, END OF PIPE AND BURIED VALVES. STAKES MAY BE OFFSET TO AVOID DRIVE AREAS (IN THE SHOULDER) AS APPROVED BY THE ENGINEER.
4. SEE DWG C003 FOR AC OVERLAY, PAVING, PIPE TRENCH DETAILS, AND CONDUIT TRENCH DETAILS.

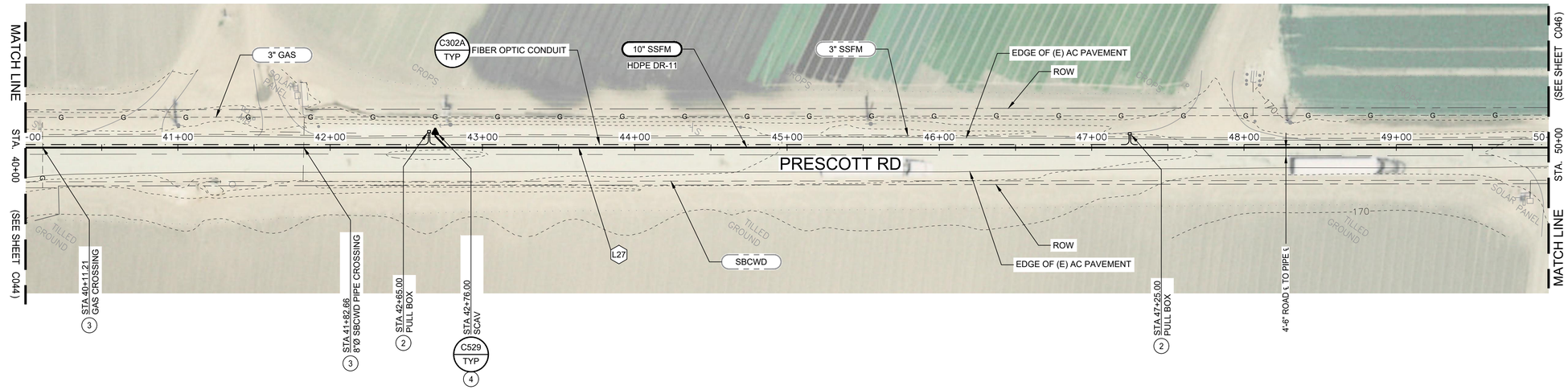

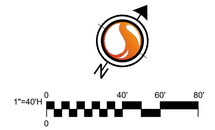

PLAN VIEW LEGEND

- EXISTING PIPE — 8" SS
- NEW PIPE — 10" SSFM
- FIBER OPTIC CONDUIT
- FIBER OPTIC PULL BOX

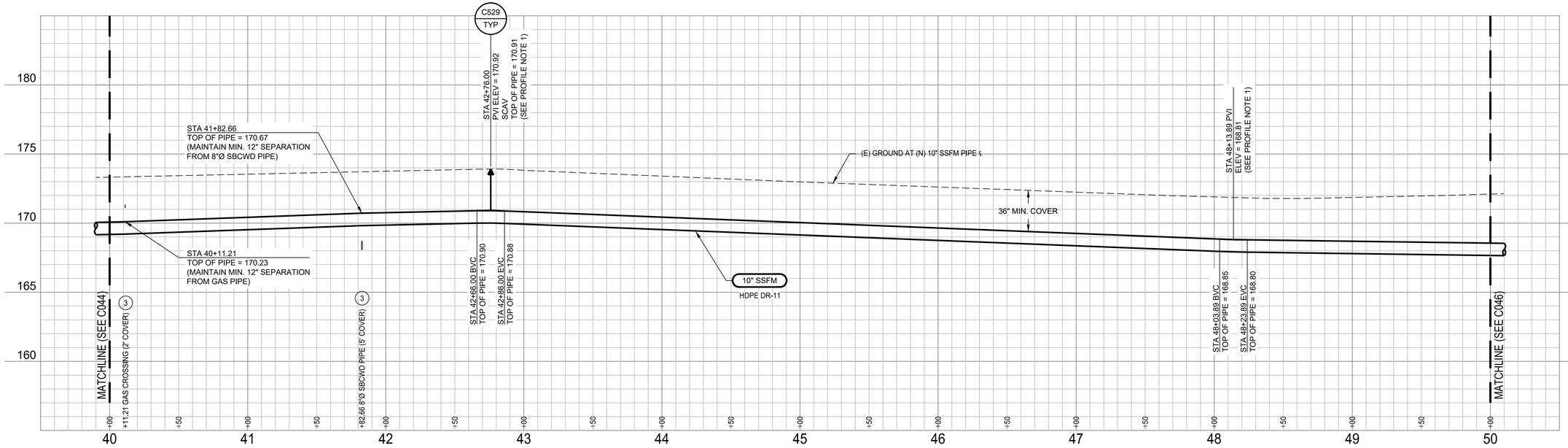

PROFILE NOTES

1. VERTICAL CURVES ARE WITHIN MANUFACTURER'S ALOWABLE PIPE DEFLECTION RADIUS (MINIMUM 62.7').
2. FIBER CONDUIT AND PULL BOXES NOT SHOWN, SEE PLAN VIEW AND SPECIFICATIONS. FOR UTILITY ELEVATION CONFLICTS, ADJUST IN THE FIELD AS APPROVED BY THE ENGINEER.

PROFILE LEGEND

- SANITARY SEWER PIPE
- HORIZONTAL BEND

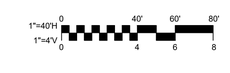

Revision	By	Appd.	YY.MM.DD
BID SET	KM	GIA	2022.12.30
PERMIT SET	KM	GIA	2022.10.10

Issued

Permit/Seal

REGISTERED PROFESSIONAL ENGINEER
GABRIEL I. ARONOW
No. 55807
Exp.12/31/24
CIVIL
STATE OF CALIFORNIA

12/30/2022

Consultant

Stantec

Stantec Consulting Services Inc.
3875 Atherton Road
Rocklin CA 95765-3716
Tel:(916) 773-8100
www.stantec.com

Copyright Reserved

The Contractor shall verify and be responsible for all dimensions. DO NOT scale the drawing - any errors or omissions shall be reported to Stantec without delay. The Copyrights to all designs and drawings are the property of Stantec. Reproduction or use for any purpose other than that authorized by Stantec is forbidden.

Client/Project Logo

Client/Project

City of San Juan Bautista

SANITARY SEWER FORCE MAIN TO HOLLISTER PROJECT

San Juan Bautista, California

File Name: 31441-C041-C050	AV	KM, AV	GIA	2022.12.30
	Dwn.	Dsgn.	Chkd.	YYYY.MM.DD

Title

PLAN AND PROFILE
PRESCOTT RD
STA. 40+00 TO 50+00

Project No.	Scale
184031441	AS SHOWN

Revision	Sheet	Drawing No.
0	36 of 128	C045

ORIGINAL SHEET - ANSI D

v:\1-Mktg\active\184031441\drawing\civil\31441-c041-c050 2022.01.12 7:20:19 AM

UNDERGROUND SERVICE ALERT

CALL: 811

TWO WORKING DAYS BEFORE YOU DIG

*** CAUTION ***

BURIED AND OVERHEAD UTILITIES

CONTRACTOR TO COORDINATE WORK WITH PG&E, AT&T, SBCWD, CITY OF SAN JUAN BAUTISTA, CITY OF HOLLISTER AND ANY OTHER UTILITY COMPANIES OBSERVED ADJACENT TO THE PROJECT PRIOR TO WORKING IN THE AREA OF THEIR UTILITIES

CONSTRUCTION NOTES

1. CAUTION: OVERHEAD ELECTRIC AND/OR COMMUNICATION UTILITY CROSSING.
2. PLACE PULL BOXES IN THE SHOULDER, 3' OFF THE AC PAVEMENT, UNO.
3. EXISTING UNDERGROUND UTILITY LOCATIONS AND DEPTHS ARE APPROXIMATE AND BASED ON AVAILABLE AS-BUILT INFORMATION. CONTRACTOR TO POTHOLE AND VERIFY EXACT LOCATIONS AND DEPTHS THREE DAYS MINIMUM PRIOR TO COMMENCEMENT OF WORK, AND NOTIFY ENGINEER OF ANY DISCREPANCIES.
4. BUTT FUSION ELBOWS SHALL BE RADIUS ELBOWS (NOT MITERED ELBOWS).

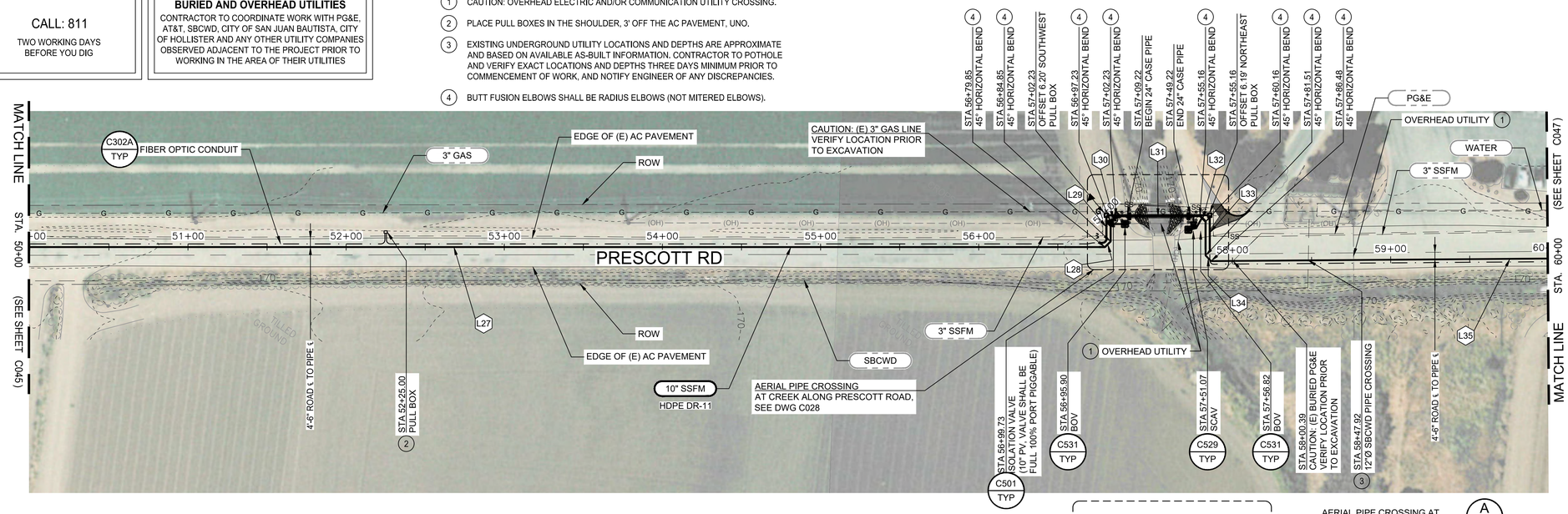

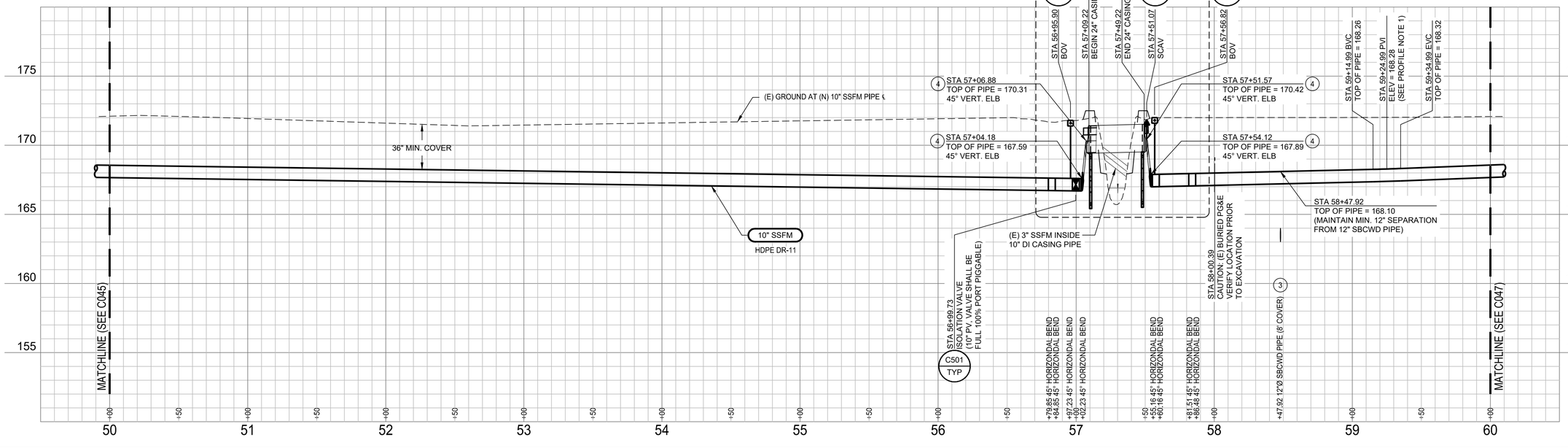

PLAN VIEW LEGEND

- EXISTING PIPE — 8" SS
- NEW PIPE — 10" SSFM
- FIBER OPTIC CONDUIT
- FIBER OPTIC PULL BOX

GENERAL NOTES

1. SEE DWG C081 FOR NEW SSFM ALIGNMENT CURVE AND LINE TABLES.
2. ALL WORK MUST BE COMPLETED WITHIN THE ROW, OUTSIDE OF DRAINAGE DITCHES. NO WORK OR ACCESS IS ALLOWED IN THE DRAINAGE DITCHES.
3. PROVIDE STAKES FOR THE 10" HDPE SSFM AT 250 FT INTERVALS AND AT ALL CHANGES IN ALIGNMENT, END OF PIPE AND BURIED VALVES. STAKES MAY BE OFFSET TO AVOID DRIVE AREAS (IN THE SHOULDER) AS APPROVED BY THE ENGINEER.
4. SEE DWG C003 FOR AC OVERLAY, PAVING, PIPE TRENCH DETAILS, AND CONDUIT TRENCH DETAILS.

PROFILE NOTES

1. VERTICAL CURVES ARE WITHIN MANUFACTURER'S ALOWABLE PIPE DEFLECTION RADIUS (MINIMUM 62.7').
2. FIBER CONDUIT AND PULL BOXES NOT SHOWN. SEE PLAN VIEW AND SPECIFICATIONS. FOR UTILITY ELEVATION CONFLICTS, ADJUST IN THE FIELD AS APPROVED BY THE ENGINEER.

PROFILE LEGEND

- SANITARY SEWER PIPE
- HORIZONTAL BEND

Revision	By	Appd.	YY.MM.DD
BID SET	KM	GIA	2022.12.30
PERMIT SET	KM	GIA	2022.10.10
Issued	By	Appd	YYYY.MM.DD

Permit/Seal

REGISTERED PROFESSIONAL ENGINEER GABRIEL I. ARONOW No. 55607 Exp.12/31/24 CIVIL STATE OF CALIFORNIA

12/30/2022

Consultant

Stantec

Stantec Consulting Services Inc.
3875 Atherton Road
Rocklin CA 95765-3716
Tel: (916) 773-8100
www.stantec.com

Copyright Reserved

The Contractor shall verify and be responsible for all dimensions. DO NOT scale the drawing - any errors or omissions shall be reported to Stantec without delay. The Copyrights to all designs and drawings are the property of Stantec. Reproduction or use for any purpose other than that authorized by Stantec is forbidden.

Client/Project Logo

Client/Project

City of San Juan Bautista

SANITARY SEWER FORCE MAIN TO HOLLISTER PROJECT

San Juan Bautista, California

File Name: 31441-C041-C050 | AV Dwn. | KM, AV Dsgn. | GIA Chkd. | 2022.12.30 YYYY.MM.DD

Title

PLAN AND PROFILE
PRESCOTT RD
STA. 50+00 TO 60+00

Project No. 184031441

Scale AS SHOWN

Revision 0 | Sheet 37 of 128

Drawing No. C046

ORIGINAL SHEET - ANSI D

\\<1.1MG\active\184031441\drawing\sct\31441-c041-c050 2023.01.12 7:54:49 AM

UNDERGROUND SERVICE ALERT

CALL: 811

TWO WORKING DAYS BEFORE YOU DIG

*** CAUTION ***

BURIED AND OVERHEAD UTILITIES

CONTRACTOR TO COORDINATE WORK WITH PG&E, AT&T, SBCWD, CITY OF SAN JUAN BAUTISTA, CITY OF HOLLISTER AND ANY OTHER UTILITY COMPANIES OBSERVED ADJACENT TO THE PROJECT PRIOR TO WORKING IN THE AREA OF THEIR UTILITIES

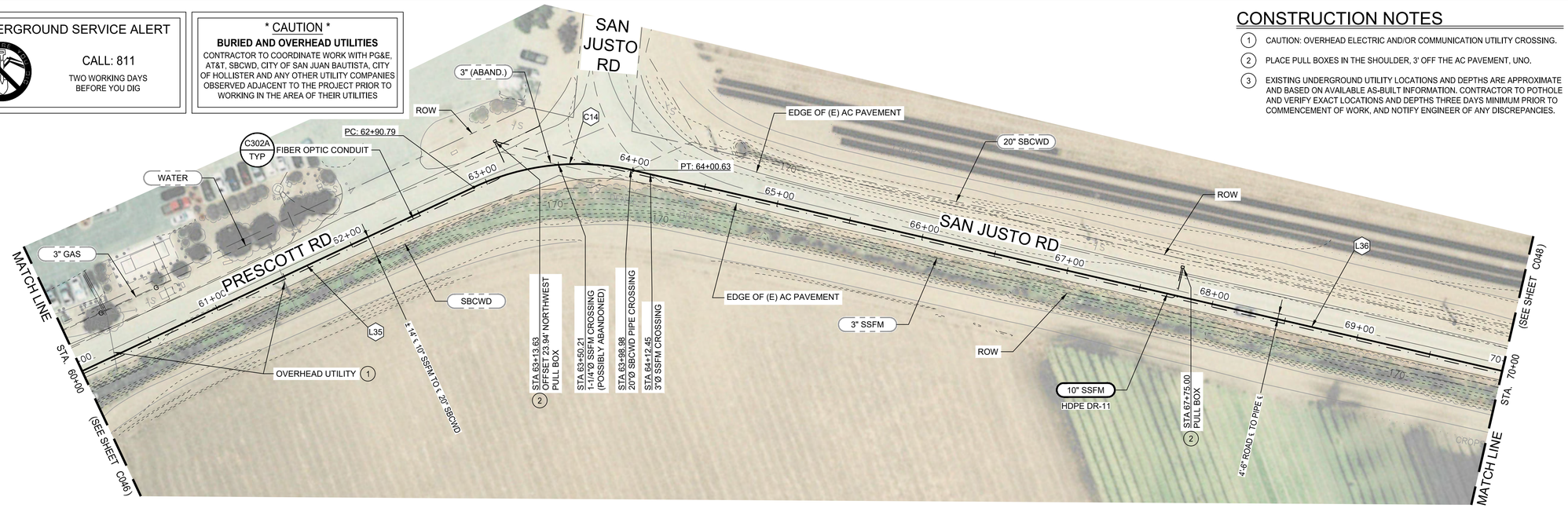

CONSTRUCTION NOTES

1. CAUTION: OVERHEAD ELECTRIC AND/OR COMMUNICATION UTILITY CROSSING.
2. PLACE PULL BOXES IN THE SHOULDER, 3' OFF THE AC PAVEMENT, UNO.
3. EXISTING UNDERGROUND UTILITY LOCATIONS AND DEPTHS ARE APPROXIMATE AND BASED ON AVAILABLE AS-BUILT INFORMATION. CONTRACTOR TO POTHOLE AND VERIFY EXACT LOCATIONS AND DEPTHS THREE DAYS MINIMUM PRIOR TO COMMENCEMENT OF WORK, AND NOTIFY ENGINEER OF ANY DISCREPANCIES.

N

1"=40'H 0 40' 60' 80'
0

PLAN VIEW LEGEND

- EXISTING PIPE — 8" SS
- NEW PIPE — 10" SSFM
- FIBER OPTIC CONDUIT
- FIBER OPTIC PULL BOX

GENERAL NOTES

1. SEE DWG C081 FOR NEW SSFM ALIGNMENT CURVE AND LINE TABLES.
2. ALL WORK MUST BE COMPLETED WITHIN THE ROW, OUTSIDE OF DRAINAGE DITCHES. NO WORK OR ACCESS IS ALLOWED IN THE DRAINAGE DITCHES.
3. PROVIDE STAKES FOR THE 10" HDPE SSFM AT 250 FT INTERVALS AND AT ALL CHANGES IN ALIGNMENT, END OF PIPE AND BURIED VALVES. STAKES MAY BE OFFSET TO AVOID DRIVE AREAS (IN THE SHOULDER) AS APPROVED BY THE ENGINEER.
4. SEE DWG C003 FOR AC OVERLAY, PAVING, PIPE TRENCH DETAILS, AND CONDUIT TRENCH DETAILS.

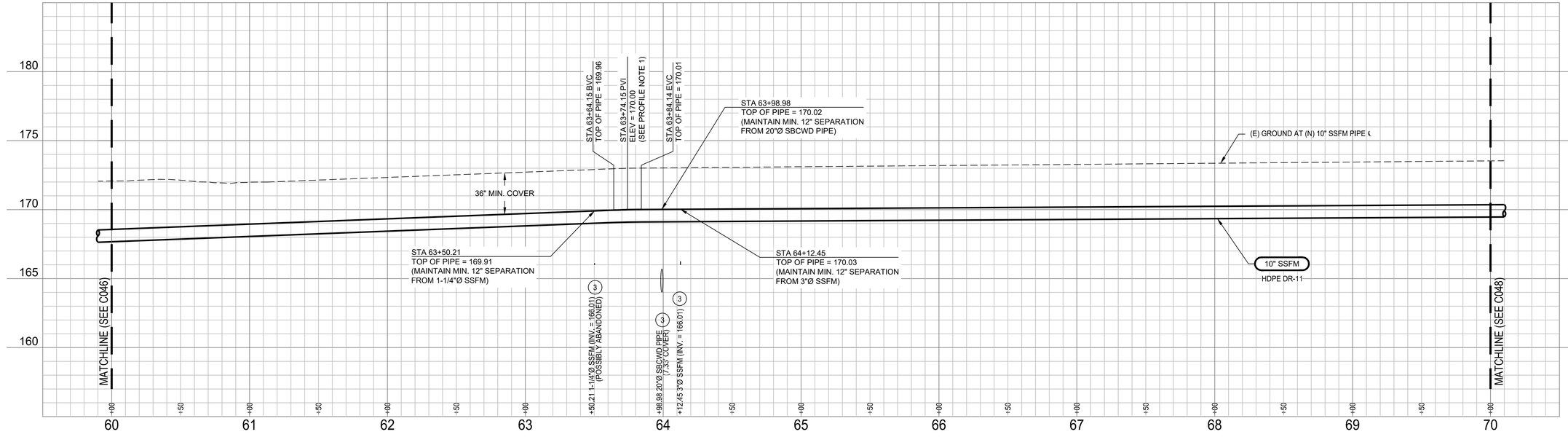

PROFILE NOTES

1. VERTICAL CURVES ARE WITHIN MANUFACTURER'S ALOWABLE PIPE DEFLECTION RADIUS (MINIMUM 62.7').
2. FIBER CONDUIT AND PULL BOXES NOT SHOWN. SEE PLAN VIEW AND SPECIFICATIONS. FOR UTILITY ELEVATION CONFLICTS, ADJUST IN THE FIELD AS APPROVED BY THE ENGINEER.

PROFILE LEGEND

- SANITARY SEWER PIPE
- HORIZONTAL BEND

1"=40'H 0 40' 60' 80'
1"=4'V 0 4 6 8

Revision	By	Appd.	YY.MM.DD
BID SET	KM	GIA	2022.12.30
PERMIT SET	KM	GIA	2022.10.10
Issued	By	Appd	YYYY.MM.DD

Permit/Seal

REGISTERED PROFESSIONAL ENGINEER GABRIEL I. ARONOW No.55607 Exp.12/31/24 CIVIL STATE OF CALIFORNIA

12/30/2022

Consultant

Stantec

Stantec Consulting Services Inc.
3875 Atherton Road
Rocklin CA 95765-3716
Tel: (916) 773-8100
www.stantec.com

Copyright Reserved

The Contractor shall verify and be responsible for all dimensions. DO NOT scale the drawing - any errors or omissions shall be reported to Stantec without delay. The Copyrights to all designs and drawings are the property of Stantec. Reproduction or use for any purpose other than that authorized by Stantec is forbidden.

Client/Project Logo

Client/Project

City of San Juan Bautista

SANITARY SEWER FORCE MAIN TO HOLLISTER PROJECT

San Juan Bautista, California

File Name: 31441-C041-C050	AV	KM, AV	GIA	2022.12.30
	Dwn.	Dsgn.	Chkd.	YYYY.MM.DD

Title

PLAN AND PROFILE
PRESCOTT RD AND SAN JUSTO RD
STA. 60+00 TO 70+00

Project No.	Scale
184031441	AS SHOWN
Revision	Sheet
0	38 of 128

Drawing No. C047

ORIGINAL SHEET - ANSI D

\\<LMR>\active\184031441\project\civil\31441-C041-C050 2023.03.17 2:27:10 AM

UNDERGROUND SERVICE ALERT

CALL: 811

TWO WORKING DAYS BEFORE YOU DIG

*** CAUTION ***

BURIED AND OVERHEAD UTILITIES

CONTRACTOR TO COORDINATE WORK WITH PG&E, AT&T, SBCWD, CITY OF SAN JUAN BAUTISTA, CITY OF HOLLISTER AND ANY OTHER UTILITY COMPANIES OBSERVED ADJACENT TO THE PROJECT PRIOR TO WORKING IN THE AREA OF THEIR UTILITIES

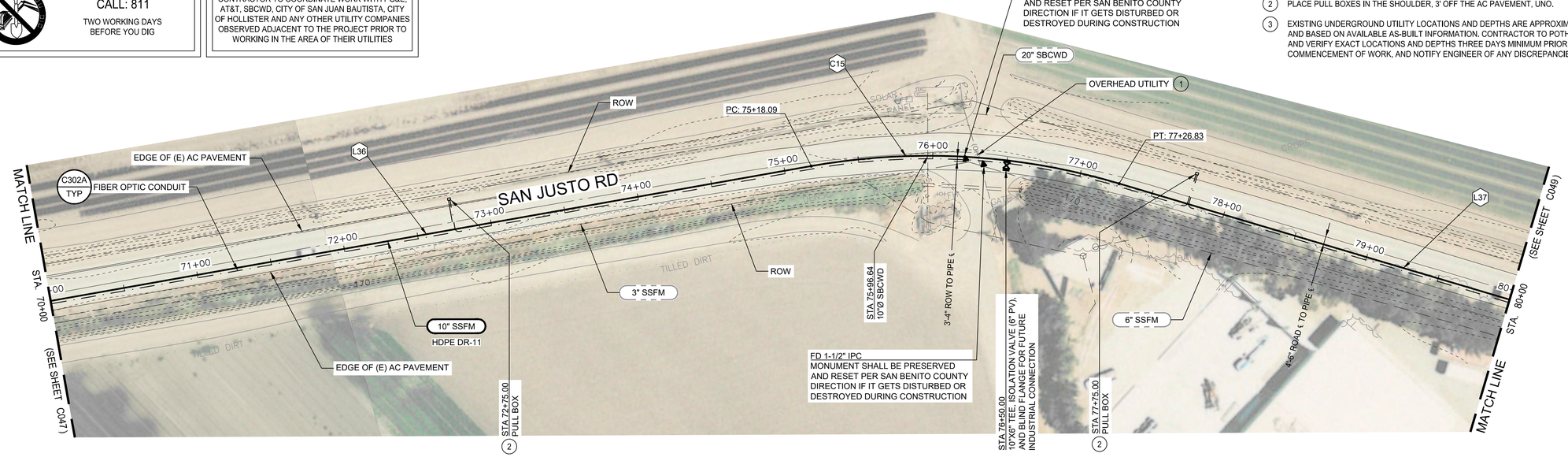

CONSTRUCTION NOTES

1. CAUTION: OVERHEAD ELECTRIC AND/OR COMMUNICATION UTILITY CROSSING.
2. PLACE PULL BOXES IN THE SHOULDER, 3' OFF THE AC PAVEMENT, UNO.
3. EXISTING UNDERGROUND UTILITY LOCATIONS AND DEPTHS ARE APPROXIMATE AND BASED ON AVAILABLE AS-BUILT INFORMATION. CONTRACTOR TO POTHOLE AND VERIFY EXACT LOCATIONS AND DEPTHS THREE DAYS MINIMUM PRIOR TO COMMENCEMENT OF WORK, AND NOTIFY ENGINEER OF ANY DISCREPANCIES.

N

1"=40'H 0 40' 60' 80'
0

PLAN VIEW LEGEND

- EXISTING PIPE — 8" SS
- NEW PIPE — 10" SSFM
- FIBER OPTIC CONDUIT
- FIBER OPTIC PULL BOX

GENERAL NOTES

1. SEE DWG C081 FOR NEW SSFM ALIGNMENT CURVE AND LINE TABLES.
2. ALL WORK MUST BE COMPLETED WITHIN THE ROW, OUTSIDE OF DRAINAGE DITCHES. NO WORK OR ACCESS IS ALLOWED IN THE DRAINAGE DITCHES.
3. PROVIDE STAKES FOR THE 10" HDPE SSFM AT 250 FT INTERVALS AND AT ALL CHANGES IN ALIGNMENT, END OF PIPE AND BURIED VALVES. STAKES MAY BE OFFSET TO AVOID DRIVE AREAS (IN THE SHOULDER) AS APPROVED BY THE ENGINEER.
4. SEE DWG C003 FOR AC OVERLAY, PAVING, PIPE TRENCH DETAILS, AND CONDUIT TRENCH DETAILS.

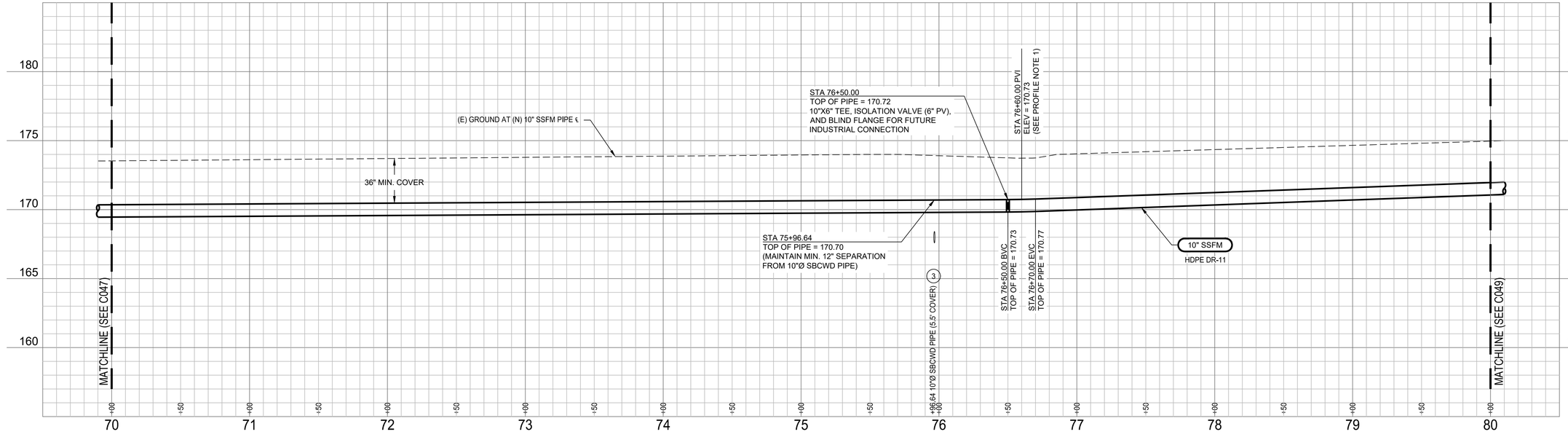

PROFILE NOTES

1. VERTICAL CURVES ARE WITHIN MANUFACTURER'S ALOWABLE PIPE DEFLECTION RADIUS (MINIMUM 62.7').
2. FIBER CONDUIT AND PULL BOXES NOT SHOWN. SEE PLAN VIEW AND SPECIFICATIONS. FOR UTILITY ELEVATION CONFLICTS, ADJUST IN THE FIELD AS APPROVED BY THE ENGINEER.

PROFILE LEGEND

- SANITARY SEWER PIPE
- HORIZONTAL BEND

1"=40'H 0 40' 60' 80'
1"=4'V 0 4 6 8

Revision	By	Appd.	YY.MM.DD
BID SET	KM	GIA	2022.12.30
PERMIT SET	KM	GIA	2022.10.10
Issued	By	Appd	YYYY.MM.DD

Permit/Seal

REGISTERED PROFESSIONAL ENGINEER GABRIEL I. ARONOW No.55807 Exp.12/31/24 CIVIL STATE OF CALIFORNIA

12/30/2022

Consultant

Stantec

Stantec Consulting Services Inc.
3875 Atherton Road
Rocklin CA 95765-3716
Tel: (916) 773-8100
www.stantec.com

Copyright Reserved

The Contractor shall verify and be responsible for all dimensions. DO NOT scale the drawing - any errors or omissions shall be reported to Stantec without delay. The Copyrights to all designs and drawings are the property of Stantec. Reproduction or use for any purpose other than that authorized by Stantec is forbidden.

Client/Project Logo

Client/Project

City of San Juan Bautista

SANITARY SEWER FORCE MAIN TO HOLLISTER PROJECT

San Juan Bautista, California

File Name: 31441-C041-C050	AV	KM, AV	GIA	2022.12.30
	Dwn.	Dsgn.	Chkd.	YYYY.MM.DD

Title

PLAN AND PROFILE
SAN JUSTO RD
STA. 70+00 TO 80+00

Project No.	Scale
184031441	AS SHOWN
Revision	Sheet
0	39 of 128

Drawing No.

C048

ORIGINAL SHEET - ANSI D

\\<\LMP\Jobs\184031441\Drawing\civil\31441-C041-C050 2023.03.17 2:58:43 AM

UNDERGROUND SERVICE ALERT

CALL: 811

TWO WORKING DAYS BEFORE YOU DIG

*** CAUTION ***

BURIED AND OVERHEAD UTILITIES

CONTRACTOR TO COORDINATE WORK WITH PG&E, AT&T, SBCWD, CITY OF SAN JUAN BAUTISTA, CITY OF HOLLISTER AND ANY OTHER UTILITY COMPANIES OBSERVED ADJACENT TO THE PROJECT PRIOR TO WORKING IN THE AREA OF THEIR UTILITIES

CONSTRUCTION NOTES

1. CAUTION: OVERHEAD ELECTRIC AND/OR COMMUNICATION UTILITY CROSSING.
2. PLACE PULL BOXES IN THE SHOULDER, 3' OFF THE AC PAVEMENT, UNO.

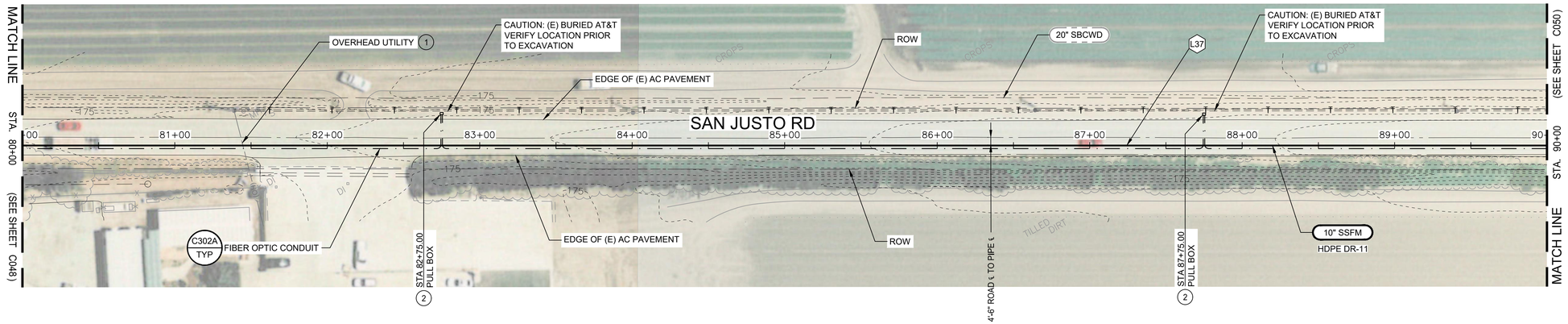

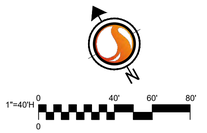

PLAN VIEW LEGEND

- EXISTING PIPE — 8" SS
- NEW PIPE — 10" SSFM
- FIBER OPTIC CONDUIT
- FIBER OPTIC PULL BOX

GENERAL NOTES

1. SEE DWG C081 FOR NEW SSFM ALIGNMENT CURVE AND LINE TABLES.
2. ALL WORK MUST BE COMPLETED WITHIN THE ROW, OUTSIDE OF DRAINAGE DITCHES. NO WORK OR ACCESS IS ALLOWED IN THE DRAINAGE DITCHES.
3. PROVIDE STAKES FOR THE 10" HDPE SSFM AT 250 FT INTERVALS AND AT ALL CHANGES IN ALIGNMENT, END OF PIPE AND BURIED VALVES. STAKES MAY BE OFFSET TO AVOID DRIVE AREAS (IN THE SHOULDER) AS APPROVED BY THE ENGINEER.
4. SEE DWG C003 FOR AC OVERLAY, PAVING, PIPE TRENCH DETAILS, AND CONDUIT TRENCH DETAILS.

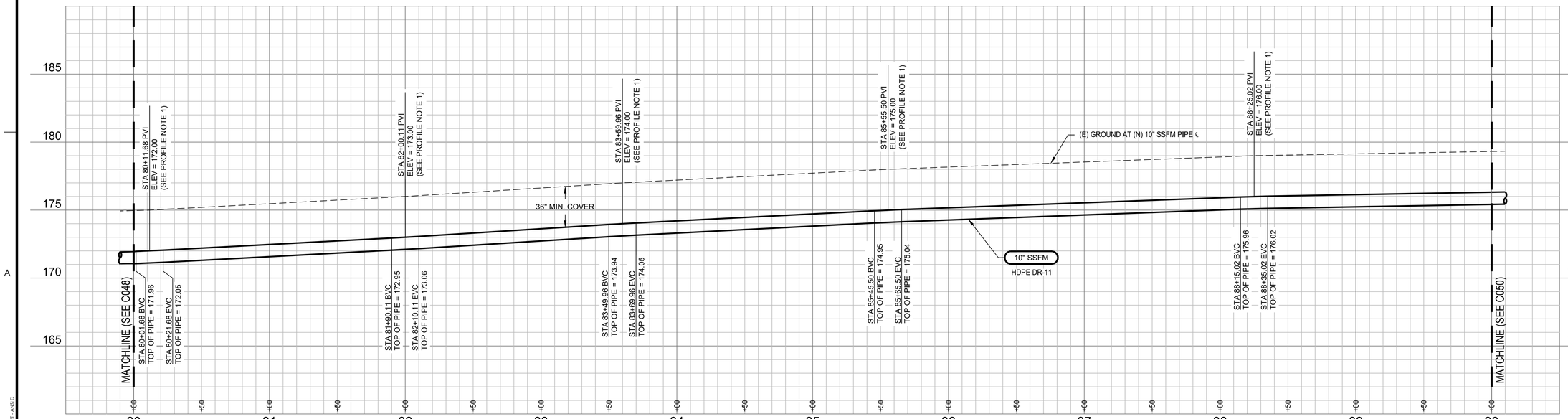

PROFILE NOTES

1. VERTICAL CURVES ARE WITHIN MANUFACTURER'S ALOWABLE PIPE DEFLECTION RADIUS (MINIMUM 62.7').
2. FIBER CONDUIT AND PULL BOXES NOT SHOWN. SEE PLAN VIEW AND SPECIFICATIONS. FOR UTILITY ELEVATION CONFLICTS, ADJUST IN THE FIELD AS APPROVED BY THE ENGINEER.

PROFILE LEGEND

- SANITARY SEWER PIPE
- HORIZONTAL BEND

1"=40'H: 0, 40', 60', 80'
1"=4'V: 0, 4, 6, 8

Revision	By	Appd.	YY.MM.DD
BID SET	KM	GIA	2022.12.30
PERMIT SET	KM	GIA	2022.10.10
Issued	By	Appd	YYYY.MM.DD

Permit/Seal

REGISTERED PROFESSIONAL ENGINEER — GABRIEL I. ARONOW — No.55607 — Exp.12/31/24 — CIVIL — STATE OF CALIFORNIA

12/30/2022

Consultant

Stantec

Stantec Consulting Services Inc.
3875 Atherton Road
Rocklin CA 95765-3716
Tel: (916) 773-8100
www.stantec.com

Copyright Reserved

The Contractor shall verify and be responsible for all dimensions. DO NOT scale the drawing - any errors or omissions shall be reported to Stantec without delay. The Copyrights to all designs and drawings are the property of Stantec. Reproduction or use for any purpose other than that authorized by Stantec is forbidden.

Client/Project Logo

Client/Project

City of San Juan Bautista

SANITARY SEWER FORCE MAIN TO HOLLISTER PROJECT

San Juan Bautista, California

File Name: 31441-C041-C050 | AV Dwn. | KM, AV Dsgn. | GIA Chkd. | 2022.12.30 YYYY.MM.DD

Title

PLAN AND PROFILE
SAN JUSTO RD
STA. 80+00 TO 90+00

Project No. 184031441

Scale AS SHOWN

Revision 0 | Sheet 40 of 128

Drawing No. C049

ORIGINAL SHEET - ANSI D

I:\MP\active\184031441\project\civil\31441-C041-C050 2023.03.17 2:40:11 AM

UNDERGROUND SERVICE ALERT

CALL: 811

TWO WORKING DAYS BEFORE YOU DIG

*** CAUTION ***

BURIED AND OVERHEAD UTILITIES

CONTRACTOR TO COORDINATE WORK WITH PG&E, AT&T, SBCWD, CITY OF SAN JUAN BAUTISTA, CITY OF HOLLISTER AND ANY OTHER UTILITY COMPANIES OBSERVED ADJACENT TO THE PROJECT PRIOR TO WORKING IN THE AREA OF THEIR UTILITIES

CONSTRUCTION NOTES

1. PLACE PULL BOXES IN THE SHOULDER, 3' OFF THE AC PAVEMENT, UNO.

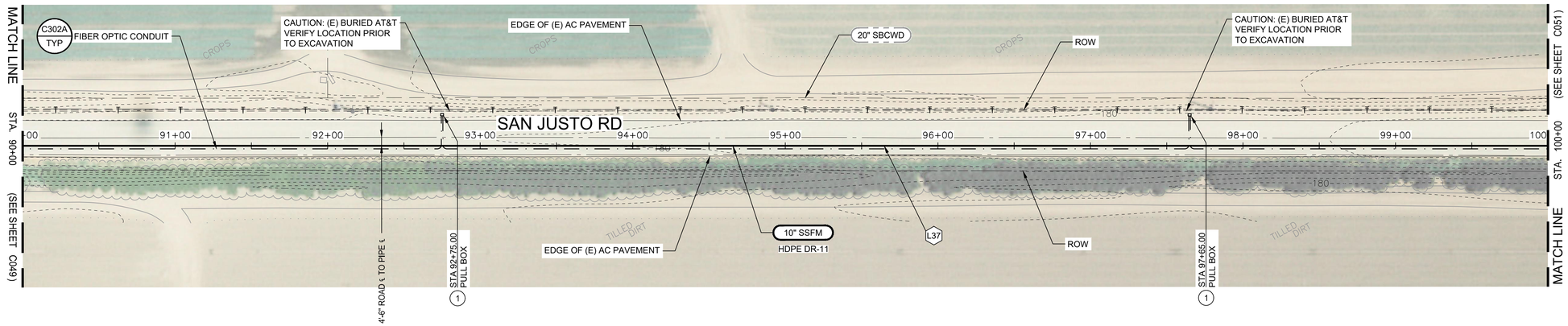

PLAN VIEW LEGEND

EXISTING PIPE — 8" SS

NEW PIPE — 10" SSFM

FIBER OPTIC CONDUIT

FIBER OPTIC PULL BOX

1"=40'H: 0, 40', 60', 80'

GENERAL NOTES

1. SEE DWG C081 FOR NEW SSFM ALIGNMENT CURVE AND LINE TABLES.
2. ALL WORK MUST BE COMPLETED WITHIN THE ROW, OUTSIDE OF DRAINAGE DITCHES. NO WORK OR ACCESS IS ALLOWED IN THE DRAINAGE DITCHES.
3. PROVIDE STAKES FOR THE 10" HDPE SSFM AT 250 FT INTERVALS AND AT ALL CHANGES IN ALIGNMENT, END OF PIPE AND BURIED VALVES. STAKES MAY BE OFFSET TO AVOID DRIVE AREAS (IN THE SHOULDER) AS APPROVED BY THE ENGINEER.
4. SEE DWG C003 FOR AC OVERLAY, PAVING, PIPE TRENCH DETAILS, AND CONDUIT TRENCH DETAILS.

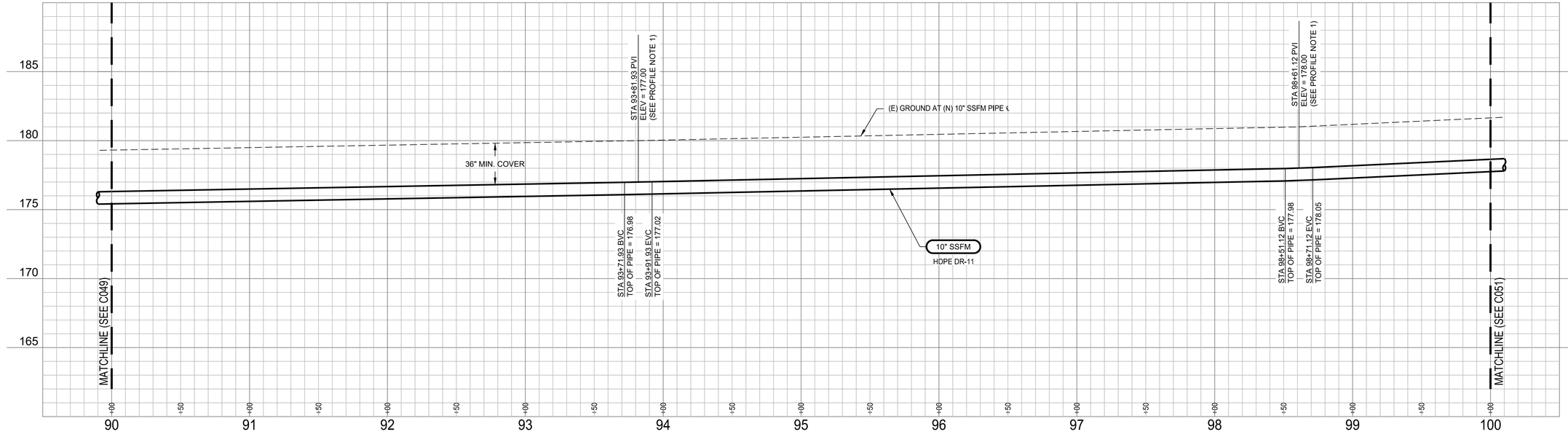

PROFILE NOTES

1. VERTICAL CURVES ARE WITHIN MANUFACTURER'S ALOWABLE PIPE DEFLECTION RADIUS (MINIMUM 62.7').
2. FIBER CONDUIT AND PULL BOXES NOT SHOWN. SEE PLAN VIEW AND SPECIFICATIONS. FOR UTILITY ELEVATION CONFLICTS, ADJUST IN THE FIELD AS APPROVED BY THE ENGINEER.

PROFILE LEGEND

SANITARY SEWER PIPE

HORIZONTAL BEND

1"=40'H: 0, 40', 60', 80'
1"=4'V: 0, 4, 6, 8

Revision	By	Appd.	YY.MM.DD
BID SET	KM	GIA	2022.12.30
PERMIT SET	KM	GIA	2022.10.10
Issued	By	Appd	YYYY.MM.DD

Permit/Seal

REGISTERED PROFESSIONAL ENGINEER — GABRIEL I. ARONOW — No.55807 — Exp.12/31/24 — CIVIL — STATE OF CALIFORNIA

12/30/2022

Consultant

Stantec

Stantec Consulting Services Inc.
3875 Atherton Road
Rocklin CA 95765-3716
Tel: (916) 773-8100
www.stantec.com

Copyright Reserved

The Contractor shall verify and be responsible for all dimensions. DO NOT scale the drawing - any errors or omissions shall be reported to Stantec without delay. The Copyrights to all designs and drawings are the property of Stantec. Reproduction or use for any purpose other than that authorized by Stantec is forbidden.

Client/Project Logo

Client/Project

City of San Juan Bautista

SANITARY SEWER FORCE MAIN TO HOLLISTER PROJECT

San Juan Bautista, California

File Name: 31441-C041-C050 | AV Dwn. | KM, AV Dsgn. | GIA Chkd. | 2022.12.30 YYYY.MM.DD

Title

PLAN AND PROFILE
SAN JUSTO RD
STA. 90+00 TO 100+00

Project No. 184031441

Scale AS SHOWN

Revision | Sheet 0 41 of 128

Drawing No. C050

ORIGINAL SHEET - ANSI D

I:\1MP\Jobs\1MP031441\Drawing\civil\31441-C041-C050 2023.03.17 2:20:14 AM AV

UNDERGROUND SERVICE ALERT

CALL: 811

TWO WORKING DAYS BEFORE YOU DIG

*** CAUTION ***

BURIED AND OVERHEAD UTILITIES

CONTRACTOR TO COORDINATE WORK WITH PG&E, AT&T, SBCWD, CITY OF SAN JUAN BAUTISTA, CITY OF HOLLISTER AND ANY OTHER UTILITY COMPANIES OBSERVED ADJACENT TO THE PROJECT PRIOR TO WORKING IN THE AREA OF THEIR UTILITIES

CONSTRUCTION NOTES

1. CAUTION: OVERHEAD ELECTRIC AND/OR COMMUNICATION UTILITY CROSSING.
2. PLACE PULL BOXES, SCAV AND BOV VALVE BOXES IN THE SHOULDER, 3' OFF THE AC PAVEMENT, UNO.
3. EXISTING UNDERGROUND UTILITY LOCATIONS AND DEPTHS ARE APPROXIMATE AND BASED ON AVAILABLE AS-BUILT INFORMATION. CONTRACTOR TO POTHOLE AND VERIFY EXACT LOCATIONS AND DEPTHS THREE DAYS MINIMUM PRIOR TO COMMENCEMENT OF WORK, AND NOTIFY ENGINEER OF ANY DISCREPANCIES.

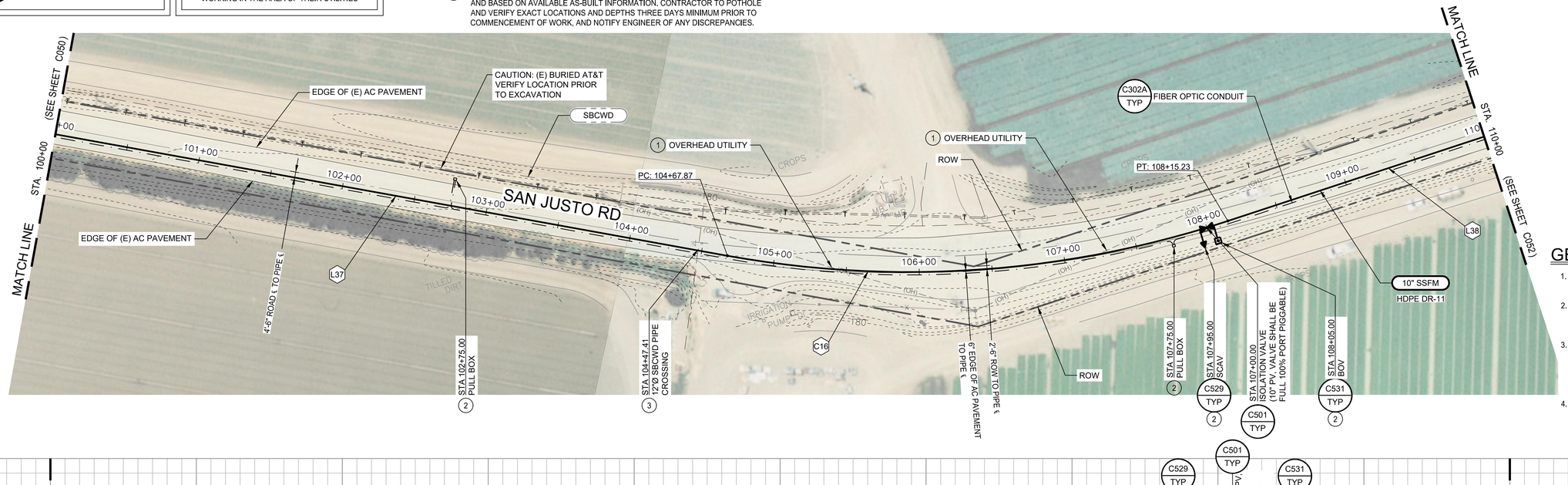

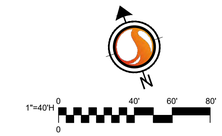

PLAN VIEW LEGEND

- EXISTING PIPE — 8" SS
- NEW PIPE — 10" SSFM
- FIBER OPTIC CONDUIT
- FIBER OPTIC PULL BOX

GENERAL NOTES

1. SEE DWG C081 FOR NEW SSFM ALIGNMENT CURVE AND LINE TABLES.
2. ALL WORK MUST BE COMPLETED WITHIN THE ROW, OUTSIDE OF DRAINAGE DITCHES. NO WORK OR ACCESS IS ALLOWED IN THE DRAINAGE DITCHES.
3. PROVIDE STAKES FOR THE 10" HDPE SSFM AT 250 FT INTERVALS AND AT ALL CHANGES IN ALIGNMENT, END OF PIPE AND BURIED VALVES. STAKES MAY BE OFFSET TO AVOID DRIVE AREAS (IN THE SHOULDER) AS APPROVED BY THE ENGINEER.
4. SEE DWG C003 FOR AC OVERLAY, PAVING, PIPE TRENCH DETAILS, AND CONDUIT TRENCH DETAILS.

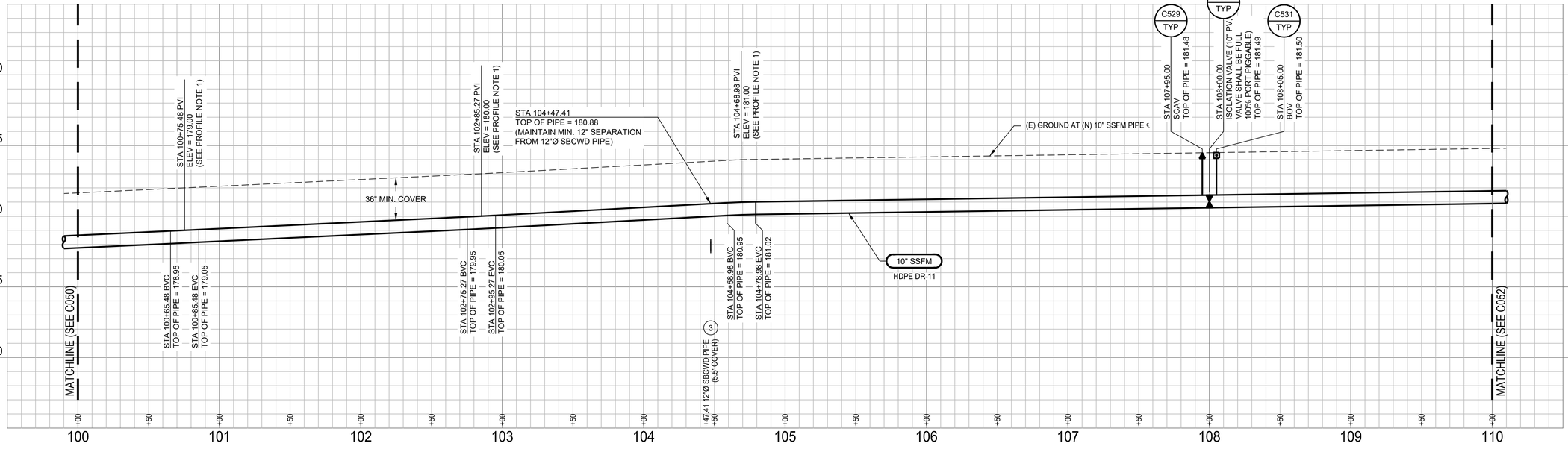

PROFILE NOTES

1. VERTICAL CURVES ARE WITHIN MANUFACTURER'S ALOWABLE PIPE DEFLECTION RADIUS (MINIMUM 62.7').
2. FIBER CONDUIT AND PULL BOXES NOT SHOWN. SEE PLAN VIEW AND SPECIFICATIONS. FOR UTILITY ELEVATION CONFLICTS, ADJUST IN THE FIELD AS APPROVED BY THE ENGINEER.

PROFILE LEGEND

- SANITARY SEWER PIPE
- HORIZONTAL BEND

Revision	By	Appd.	YY.MM.DD
BID SET	KM	GIA	2022.12.30
PERMIT SET	KM	GIA	2022.10.10
Issued	By	Appd	YYYY.MM.DD

Permit/Seal

REGISTERED PROFESSIONAL ENGINEER GABRIEL I. ARONOW No.55607 Exp.12/31/24 CIVIL STATE OF CALIFORNIA

12/30/2022

Consultant

Stantec

Stantec Consulting Services Inc.
3875 Atherton Road
Rocklin CA 95765-3716
Tel: (916) 773-8100
www.stantec.com

Copyright Reserved

The Contractor shall verify and be responsible for all dimensions. DO NOT scale the drawing - any errors or omissions shall be reported to Stantec without delay. The Copyrights to all designs and drawings are the property of Stantec. Reproduction or use for any purpose other than that authorized by Stantec is forbidden.

Client/Project Logo

Client/Project

City of San Juan Bautista

SANITARY SEWER FORCE MAIN TO HOLLISTER PROJECT

San Juan Bautista, California

File Name: 31441-C051-C060	AV	KM, AV	GIA	2022.12.30
	Dwn.	Dsgn.	Chkd.	YYYY.MM.DD

Title

PLAN AND PROFILE
SAN JUSTO RD
STA. 100+00 TO 110+00

Project No.	Scale
184031441	AS SHOWN
Revision	Sheet
0	42 of 128

Drawing No.

C051

ORIGINAL SHEET - ANSI D

\\<\LMR\active\184031441\project\civil\31441-C051-C060 2023.01.12 8:25:01 AM

UNDERGROUND SERVICE ALERT

CALL: 811

TWO WORKING DAYS BEFORE YOU DIG

*** CAUTION ***

BURIED AND OVERHEAD UTILITIES

CONTRACTOR TO COORDINATE WORK WITH PG&E, AT&T, SBCWD, CITY OF SAN JUAN BAUTISTA, CITY OF HOLLISTER AND ANY OTHER UTILITY COMPANIES OBSERVED ADJACENT TO THE PROJECT PRIOR TO WORKING IN THE AREA OF THEIR UTILITIES

CONSTRUCTION NOTES

1. PLACE PULL BOXES IN THE SHOULDER, 3' OFF THE AC PAVEMENT, UNO.

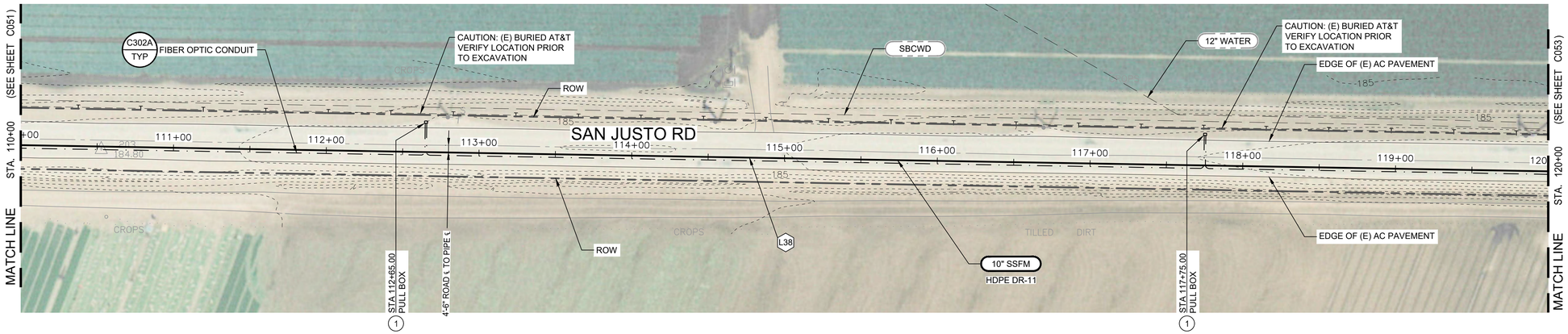

N

1"=40'H

0 40' 60' 80'

PLAN VIEW LEGEND

- EXISTING PIPE — 8" SS
- NEW PIPE — 10" SSFM
- FIBER OPTIC CONDUIT
- FIBER OPTIC PULL BOX

GENERAL NOTES

1. SEE DWG C081 FOR NEW SSFM ALIGNMENT CURVE AND LINE TABLES.
2. ALL WORK MUST BE COMPLETED WITHIN THE ROW, OUTSIDE OF DRAINAGE DITCHES. NO WORK OR ACCESS IS ALLOWED IN THE DRAINAGE DITCHES.
3. PROVIDE STAKES FOR THE 10" HDPE SSFM AT 250 FT INTERVALS AND AT ALL CHANGES IN ALIGNMENT, END OF PIPE AND BURIED VALVES. STAKES MAY BE OFFSET TO AVOID DRIVE AREAS (IN THE SHOULDER) AS APPROVED BY THE ENGINEER.
4. SEE DWG C003 FOR AC OVERLAY, PAVING, PIPE TRENCH DETAILS, AND CONDUIT TRENCH DETAILS.

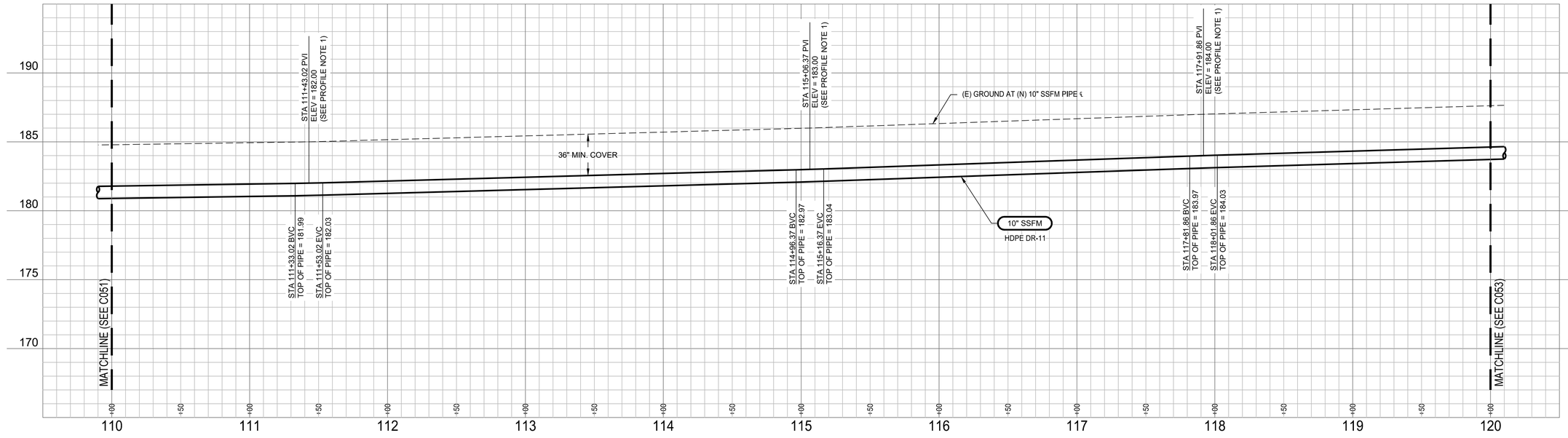

PROFILE NOTES

1. VERTICAL CURVES ARE WITHIN MANUFACTURER'S ALOWABLE PIPE DEFLECTION RADIUS (MINIMUM 62.7').
2. FIBER CONDUIT AND PULL BOXES NOT SHOWN. SEE PLAN VIEW AND SPECIFICATIONS. FOR UTILITY ELEVATION CONFLICTS, ADJUST IN THE FIELD AS APPROVED BY THE ENGINEER.

PROFILE LEGEND

- SANITARY SEWER PIPE
- HORIZONTAL BEND

1"=40'H 0 40' 60' 80'

1"=4'V 0 4 6 8

Revision	By	Appd.	YY.MM.DD
BID SET	KM	GIA	2022.12.30
PERMIT SET	KM	GIA	2022.10.10
Issued	By	Appd	YYYY.MM.DD

Permit/Seal

REGISTERED PROFESSIONAL ENGINEER GABRIEL I. ARONOW No.55607 Exp.12/31/24 CIVIL STATE OF CALIFORNIA

12/30/2022

Consultant

Stantec

Stantec Consulting Services Inc.
3875 Atherton Road
Rocklin CA 95765-3716
Tel: (916) 773-8100
www.stantec.com

Copyright Reserved

The Contractor shall verify and be responsible for all dimensions. DO NOT scale the drawing - any errors or omissions shall be reported to Stantec without delay. The Copyrights to all designs and drawings are the property of Stantec. Reproduction or use for any purpose other than that authorized by Stantec is forbidden.

Client/Project Logo

Client/Project

City of San Juan Bautista

SANITARY SEWER FORCE MAIN TO HOLLISTER PROJECT

San Juan Bautista, California

File Name: 31441-C051-C060 | AV Dwn. | KM, AV Dsgn. | GIA Chkd. | 2022.12.30 YYYY.MM.DD

Title

PLAN AND PROFILE
SAN JUSTO RD
STA. 110+00 TO 120+00

Project No. 184031441 | Scale AS SHOWN

Revision 0 | Sheet 43 of 128 | Drawing No. C052

ORIGINAL SHEET - ANSI D

Y:\1MD\active\184031441\drawing\sht\31441-C051-C060 2023.01.12 8:05:34 AM

UNDERGROUND SERVICE ALERT

CALL: 811

TWO WORKING DAYS BEFORE YOU DIG

*** CAUTION ***

BURIED AND OVERHEAD UTILITIES

CONTRACTOR TO COORDINATE WORK WITH PG&E, AT&T, SBCWD, CITY OF SAN JUAN BAUTISTA, CITY OF HOLLISTER AND ANY OTHER UTILITY COMPANIES OBSERVED ADJACENT TO THE PROJECT PRIOR TO WORKING IN THE AREA OF THEIR UTILITIES

CONSTRUCTION NOTES

1. CAUTION: OVERHEAD ELECTRIC AND/OR COMMUNICATION UTILITY CROSSING.
2. PLACE PULL BOXES IN THE SHOULDER, 3' OFF THE AC PAVEMENT, UNO.
3. EXISTING UNDERGROUND UTILITY LOCATIONS AND DEPTHS ARE APPROXIMATE AND BASED ON AVAILABLE AS-BUILT INFORMATION. CONTRACTOR TO POTHOLE AND VERIFY EXACT LOCATIONS AND DEPTHS THREE DAYS MINIMUM PRIOR TO COMMENCEMENT OF WORK, AND NOTIFY ENGINEER OF ANY DISCREPANCIES.
4. REMOVE AND WASTE ABANDONED PIPE AS REQUIRED.

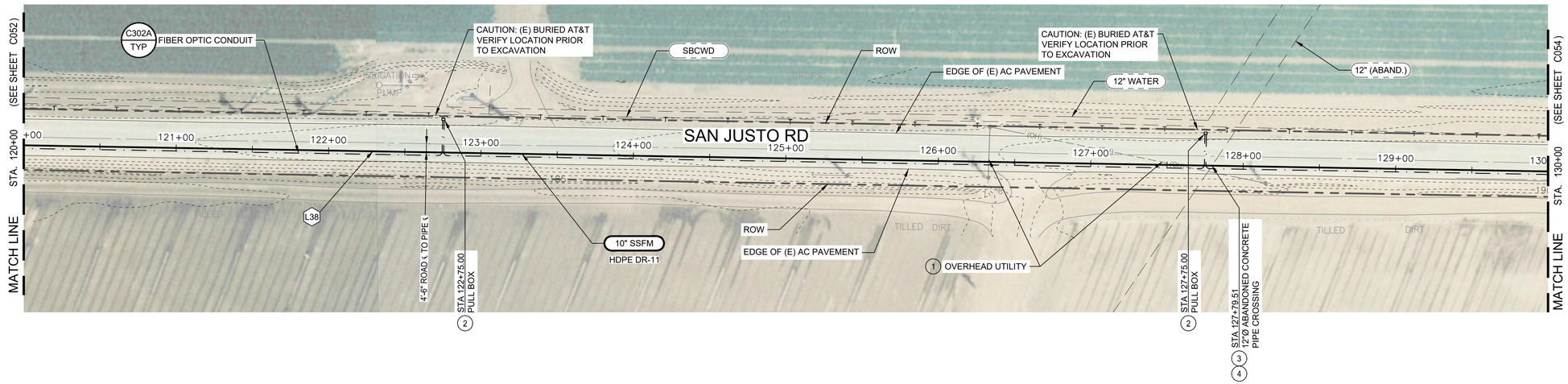

PLAN VIEW LEGEND

- EXISTING PIPE — 8" SS
- NEW PIPE — 10" SSFM
- FIBER OPTIC CONDUIT
- FIBER OPTIC PULL BOX

GENERAL NOTES

1. SEE DWG C081 FOR NEW SSFM ALIGNMENT CURVE AND LINE TABLES.
2. ALL WORK MUST BE COMPLETED WITHIN THE ROW, OUTSIDE OF DRAINAGE DITCHES. NO WORK OR ACCESS IS ALLOWED IN THE DRAINAGE DITCHES.
3. PROVIDE STAKES FOR THE 10" HDPE SSFM AT 250 FT INTERVALS AND AT ALL CHANGES IN ALIGNMENT, END OF PIPE AND BURIED VALVES. STAKES MAY BE OFFSET TO AVOID DRIVE AREAS (IN THE SHOULDER) AS APPROVED BY THE ENGINEER.
4. SEE DWG C003 FOR AC OVERLAY, PAVING, PIPE TRENCH DETAILS, AND CONDUIT TRENCH DETAILS.

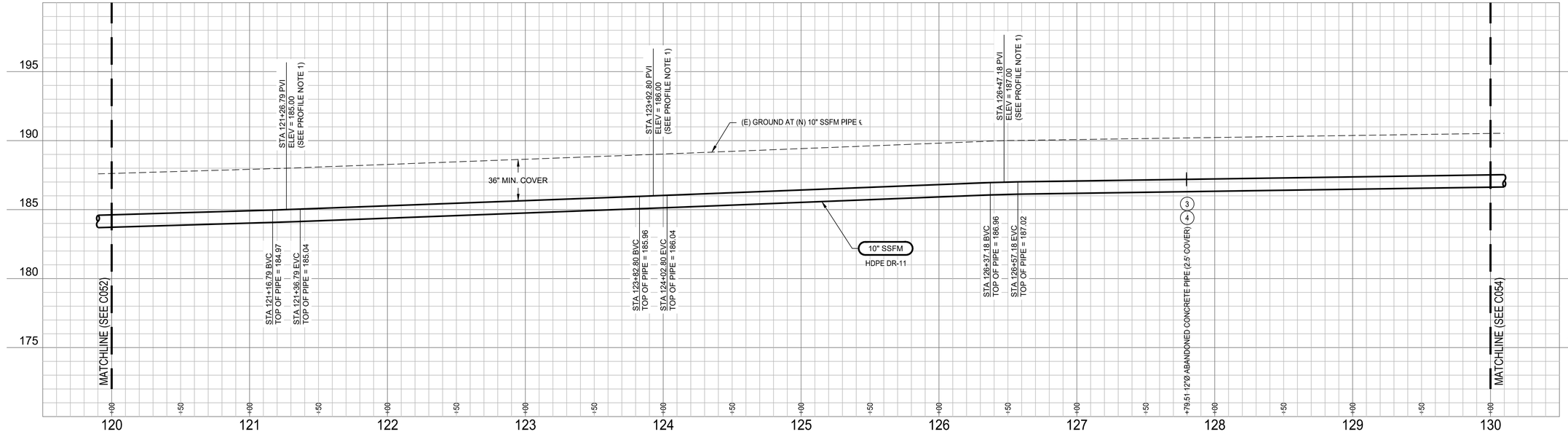

PROFILE NOTES

1. VERTICAL CURVES ARE WITHIN MANUFACTURER'S ALOWABLE PIPE DEFLECTION RADIUS (MINIMUM 62.7').
2. FIBER CONDUIT AND PULL BOXES NOT SHOWN. SEE PLAN VIEW AND SPECIFICATIONS. FOR UTILITY ELEVATION CONFLICTS, ADJUST IN THE FIELD AS APPROVED BY THE ENGINEER.

PROFILE LEGEND

- SANITARY SEWER PIPE
- HORIZONTAL BEND

Revision	By	Appd.	YY.MM.DD
BID SET	KM	GIA	2022.12.30
PERMIT SET	KM	GIA	2022.10.10
Issued	By	Appd	YYYY.MM.DD

Permit/Seal

REGISTERED PROFESSIONAL ENGINEER — GABRIEL I. ARONOW — No.55607 — Exp.12/31/24 — CIVIL — STATE OF CALIFORNIA

12/30/2022

Consultant

Stantec

Stantec Consulting Services Inc.
3875 Atherton Road
Rocklin CA 95765-3716
Tel: (916) 773-8100
www.stantec.com

Copyright Reserved

The Contractor shall verify and be responsible for all dimensions. DO NOT scale the drawing - any errors or omissions shall be reported to Stantec without delay. The Copyrights to all designs and drawings are the property of Stantec. Reproduction or use for any purpose other than that authorized by Stantec is forbidden.

Client/Project Logo

Client/Project

City of San Juan Bautista

SANITARY SEWER FORCE MAIN TO HOLLISTER PROJECT

San Juan Bautista, California

File Name: 31441-C051-C060 | AV Dwn. | KM, AV Dsgn. | GIA Chkd. | 2022.12.30 YYYY.MM.DD

Title

PLAN AND PROFILE
SAN JUSTO RD
STA. 120+00 TO 130+00

Project No. 184031441 | Scale AS SHOWN

Revision 0 | Sheet 44 of 128 | Drawing No. C053

ORIGINAL SHEET - ANSI D

\\<LMDLocFile>\184031441\Gdrawing\civil\31441-C051-C060 2023.03.17 8:06:51 AM

UNDERGROUND SERVICE ALERT

CALL: 811

TWO WORKING DAYS BEFORE YOU DIG

*** CAUTION ***

BURIED AND OVERHEAD UTILITIES

CONTRACTOR TO COORDINATE WORK WITH PG&E, AT&T, SBCWD, CITY OF SAN JUAN BAUTISTA, CITY OF HOLLISTER AND ANY OTHER UTILITY COMPANIES OBSERVED ADJACENT TO THE PROJECT PRIOR TO WORKING IN THE AREA OF THEIR UTILITIES

CONSTRUCTION NOTES

1. CAUTION: OVERHEAD ELECTRIC AND/OR COMMUNICATION UTILITY CROSSING.
2. PLACE PULL BOXES IN THE SHOULDER, 3' OFF THE AC PAVEMENT, UNO.

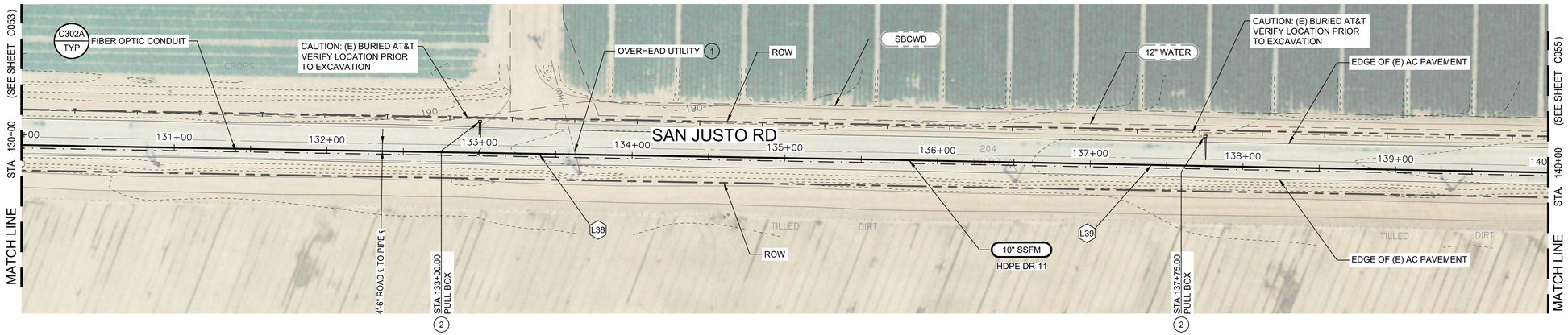

PLAN VIEW LEGEND

- EXISTING PIPE — 8" SS
- NEW PIPE — 10" SSFM
- FIBER OPTIC CONDUIT
- FIBER OPTIC PULL BOX

GENERAL NOTES

1. SEE DWG C081 FOR NEW SSFM ALIGNMENT CURVE AND LINE TABLES.
2. ALL WORK MUST BE COMPLETED WITHIN THE ROW, OUTSIDE OF DRAINAGE DITCHES. NO WORK OR ACCESS IS ALLOWED IN THE DRAINAGE DITCHES.
3. PROVIDE STAKES FOR THE 10" HDPE SSFM AT 250 FT INTERVALS AND AT ALL CHANGES IN ALIGNMENT, END OF PIPE AND BURIED VALVES. STAKES MAY BE OFFSET TO AVOID DRIVE AREAS (IN THE SHOULDER) AS APPROVED BY THE ENGINEER.
4. SEE DWG C003 FOR AC OVERLAY, PAVING, PIPE TRENCH DETAILS, AND CONDUIT TRENCH DETAILS.

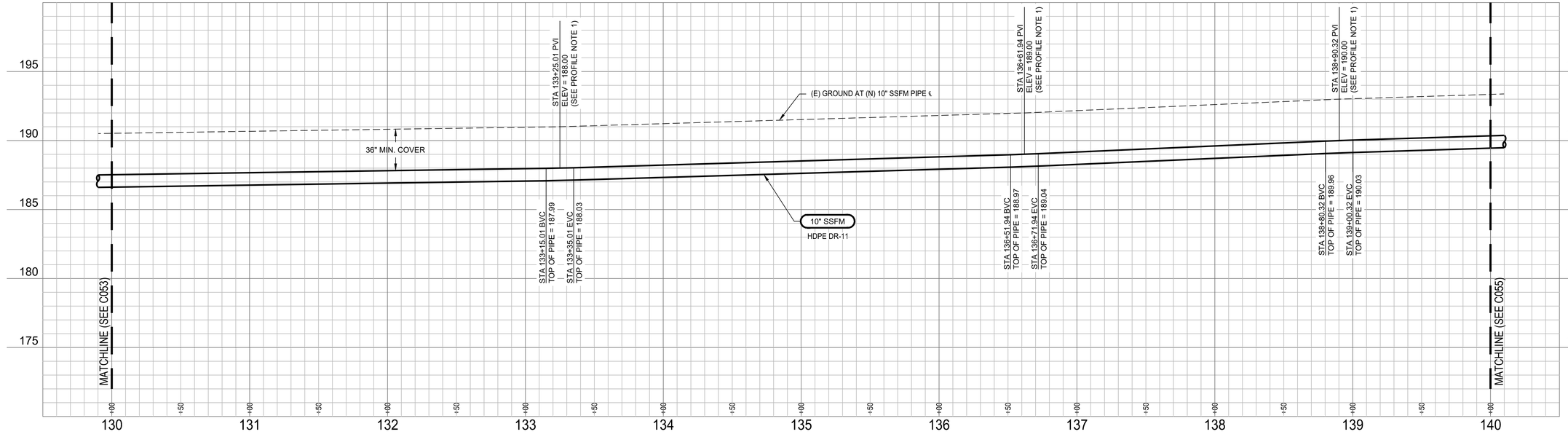

PROFILE NOTES

1. VERTICAL CURVES ARE WITHIN MANUFACTURER'S ALOWABLE PIPE DEFLECTION RADIUS (MINIMUM 62.7').
2. FIBER CONDUIT AND PULL BOXES NOT SHOWN. SEE PLAN VIEW AND SPECIFICATIONS. FOR UTILITY ELEVATION CONFLICTS, ADJUST IN THE FIELD AS APPROVED BY THE ENGINEER.

PROFILE LEGEND

- SANITARY SEWER PIPE
- HORIZONTAL BEND

Revision	By	Appd.	YY.MM.DD
BID SET	KM	GIA	2022.12.30
PERMIT SET	KM	GIA	2022.10.10
Issued	By	Appd	YYYY.MM.DD

Permit/Seal

REGISTERED PROFESSIONAL ENGINEER — GABRIEL I. ARONOW — No.55807 — Exp.12/31/24 — CIVIL — STATE OF CALIFORNIA

12/30/2022

Consultant

Stantec

Stantec Consulting Services Inc.
3875 Atherton Road
Rocklin CA 95765-3716
Tel: (916) 773-8100
www.stantec.com

Copyright Reserved

The Contractor shall verify and be responsible for all dimensions. DO NOT scale the drawing - any errors or omissions shall be reported to Stantec without delay. The Copyrights to all designs and drawings are the property of Stantec. Reproduction or use for any purpose other than that authorized by Stantec is forbidden.

Client/Project Logo

Client/Project

City of San Juan Bautista

SANITARY SEWER FORCE MAIN TO HOLLISTER PROJECT

San Juan Bautista, California

File Name: 31441-C051-C060 | AV Dwn. | KM, AV Dsgn. | GIA Chkd. | 2022.12.30 YYYY.MM.DD

Title

PLAN AND PROFILE
SAN JUSTO RD
STA. 130+00 TO 140+00

Project No. 184031441

Scale AS SHOWN

Revision 0

Sheet 45 of 128

Drawing No. C054

ORIGINAL SHEET - ANSI D

Y:\1MD\active\184031441\drawing\sht\31441-C051-C060 2023.01.12 8:08:13 AM

UNDERGROUND SERVICE ALERT

CALL: 811

TWO WORKING DAYS BEFORE YOU DIG

*** CAUTION ***

BURIED AND OVERHEAD UTILITIES

CONTRACTOR TO COORDINATE WORK WITH PG&E, AT&T, SBCWD, CITY OF SAN JUAN BAUTISTA, CITY OF HOLLISTER AND ANY OTHER UTILITY COMPANIES OBSERVED ADJACENT TO THE PROJECT PRIOR TO WORKING IN THE AREA OF THEIR UTILITIES

CONSTRUCTION NOTES

1. CAUTION: OVERHEAD ELECTRIC AND/OR COMMUNICATION UTILITY CROSSING.
2. PLACE PULL BOXES IN THE SHOULDER, 3' OFF THE AC PAVEMENT, UNO.
3. EXISTING UNDERGROUND UTILITY LOCATIONS AND DEPTHS ARE APPROXIMATE AND BASED ON AVAILABLE AS-BUILT INFORMATION. CONTRACTOR TO POTHOLE AND VERIFY EXACT LOCATIONS AND DEPTHS THREE DAYS MINIMUM PRIOR TO COMMENCEMENT OF WORK, AND NOTIFY ENGINEER OF ANY DISCREPANCIES.

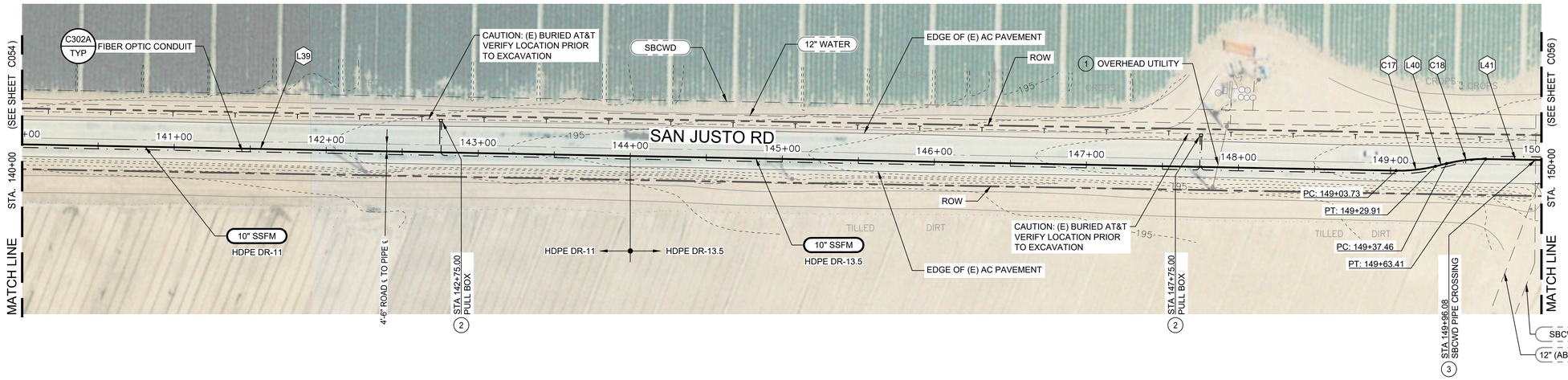

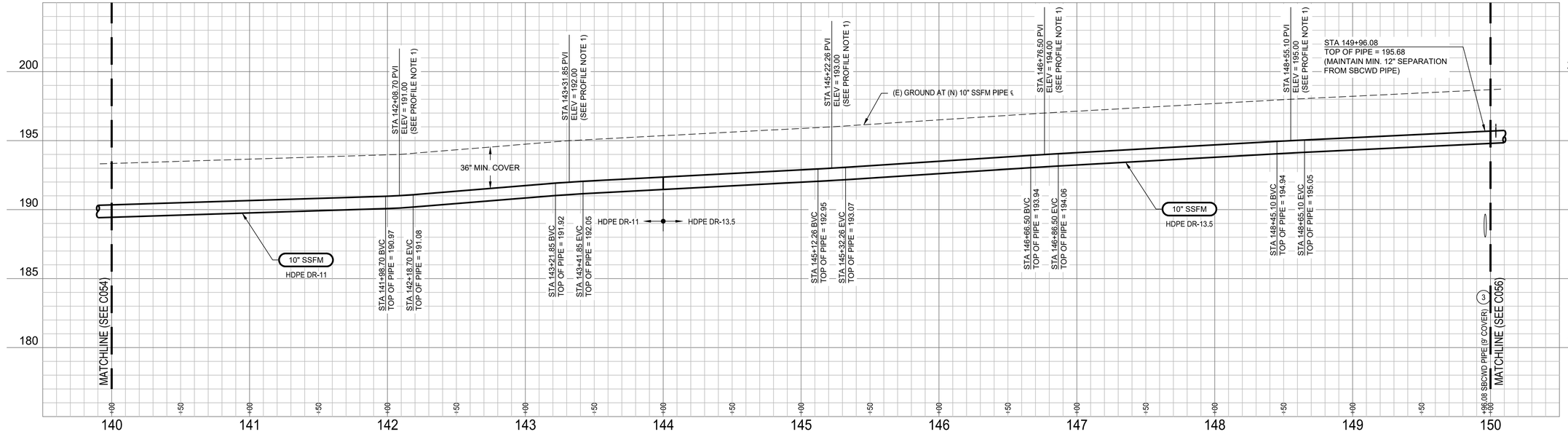

PLAN VIEW LEGEND

- EXISTING PIPE — 8" SS
- NEW PIPE — 10" SSFM
- FIBER OPTIC CONDUIT
- FIBER OPTIC PULL BOX

1"=40'H (0, 40', 60', 80')

GENERAL NOTES

1. SEE DWG C081 FOR NEW SSFM ALIGNMENT CURVE AND LINE TABLES.
2. ALL WORK MUST BE COMPLETED WITHIN THE ROW, OUTSIDE OF DRAINAGE DITCHES. NO WORK OR ACCESS IS ALLOWED IN THE DRAINAGE DITCHES.
3. PROVIDE STAKES FOR THE 10" HDPE SSFM AT 250 FT INTERVALS AND AT ALL CHANGES IN ALIGNMENT, END OF PIPE AND BURIED VALVES. STAKES MAY BE OFFSET TO AVOID DRIVE AREAS (IN THE SHOULDER) AS APPROVED BY THE ENGINEER.
4. SEE DWG C003 FOR AC OVERLAY, PAVING, PIPE TRENCH DETAILS, AND CONDUIT TRENCH DETAILS.

PROFILE NOTES

1. VERTICAL CURVES ARE WITHIN MANUFACTURER'S ALOWABLE PIPE DEFLECTION RADIUS (MINIMUM 62.7').
2. FIBER CONDUIT AND PULL BOXES NOT SHOWN. SEE PLAN VIEW AND SPECIFICATIONS. FOR UTILITY ELEVATION CONFLICTS, ADJUST IN THE FIELD AS APPROVED BY THE ENGINEER.

PROFILE LEGEND

- SANITARY SEWER PIPE
- HORIZONTAL BEND

1"=40'H (0, 40', 60', 80') 1"=4'V (0, 4, 6, 8)

Revision	By	Appd.	YY.MM.DD
BID SET	KM	GIA	2022.12.30
PERMIT SET	KM	GIA	2022.10.10
Issued	By	Appd	YYYY.MM.DD

Permit/Seal

REGISTERED PROFESSIONAL ENGINEER — GABRIEL I. ARONOW — No.55607 — Exp.12/31/24 — STATE OF CALIFORNIA — CIVIL

12/30/2022

Consultant

Stantec

Stantec Consulting Services Inc.
3875 Atherton Road
Rocklin CA 95765-3716
Tel: (916) 773-8100
www.stantec.com

Copyright Reserved

The Contractor shall verify and be responsible for all dimensions. DO NOT scale the drawing - any errors or omissions shall be reported to Stantec without delay. The Copyrights to all designs and drawings are the property of Stantec. Reproduction or use for any purpose other than that authorized by Stantec is forbidden.

Client/Project Logo

Client/Project

City of San Juan Bautista

SANITARY SEWER FORCE MAIN TO HOLLISTER PROJECT

San Juan Bautista, California

File Name: 31441-C051-C060 | AV Dwn. | KM, AV Dsgn. | GIA Chkd. | 2022.12.30 YYYY.MM.DD

Title

PLAN AND PROFILE
SAN JUSTO RD
STA. 140+00 TO 150+00

Project No. 184031441

Scale AS SHOWN

Revision 0 | Sheet 46 of 128

Drawing No. C055

ORIGINAL SHEET - ANSI D

\\<LMR-path>\<LMR>\184031441\Gdrawing\civil\31441-C051-C060 2023.01.17 8:29:49 AM AM

UNDERGROUND SERVICE ALERT

CALL: 811

TWO WORKING DAYS BEFORE YOU DIG

*** CAUTION ***

BURIED AND OVERHEAD UTILITIES

CONTRACTOR TO COORDINATE WORK WITH PG&E, AT&T, SBCWD, CITY OF SAN JUAN BAUTISTA, CITY OF HOLLISTER AND ANY OTHER UTILITY COMPANIES OBSERVED ADJACENT TO THE PROJECT PRIOR TO WORKING IN THE AREA OF THEIR UTILITIES

CONSTRUCTION NOTES

1. CAUTION: OVERHEAD ELECTRIC AND/OR COMMUNICATION UTILITY CROSSING.
2. PLACE PULL BOXES IN THE SHOULDER, 3' OFF THE AC PAVEMENT, UNO.
3. EXISTING UNDERGROUND UTILITY LOCATIONS AND DEPTHS ARE APPROXIMATE AND BASED ON AVAILABLE AS-BUILT INFORMATION. CONTRACTOR TO POTHOLE AND VERIFY EXACT LOCATIONS AND DEPTHS THREE DAYS MINIMUM PRIOR TO COMMENCEMENT OF WORK, AND NOTIFY ENGINEER OF ANY DISCREPANCIES.
4. REMOVE AND WASTE ABANDONED PIPE AS REQUIRED.
5. INSTALL REMOTE PIGGING STATION 1 AS DETAILED ON SHEET C024.

GENERAL NOTES

1. SEE DWG C081 FOR NEW SSFM ALIGNMENT CURVE AND LINE TABLES.
2. ALL WORK MUST BE COMPLETED WITHIN THE ROW, OUTSIDE OF DRAINAGE DITCHES. NO WORK OR ACCESS IS ALLOWED IN THE DRAINAGE DITCHES.
3. PROVIDE STAKES FOR THE 10" HDPE SSFM AT 250 FT INTERVALS AND AT ALL CHANGES IN ALIGNMENT, END OF PIPE AND BURIED VALVES. STAKES MAY BE OFFSET TO AVOID DRIVE AREAS (IN THE SHOULDER) AS APPROVED BY THE ENGINEER.
4. SEE DWG C003 FOR AC OVERLAY, PAVING, PIPE TRENCH DETAILS, AND CONDUIT TRENCH DETAILS.

N

1"=40'H 0 40' 60' 80'

0

PLAN VIEW LEGEND

EXISTING PIPE — 8" SS

NEW PIPE — 10" SSFM

FIBER OPTIC CONDUIT

FIBER OPTIC PULL BOX

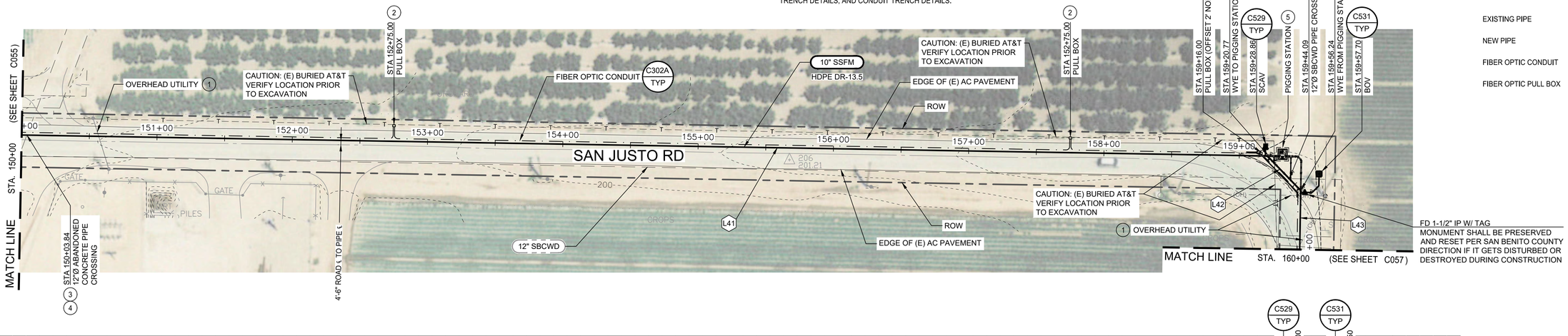

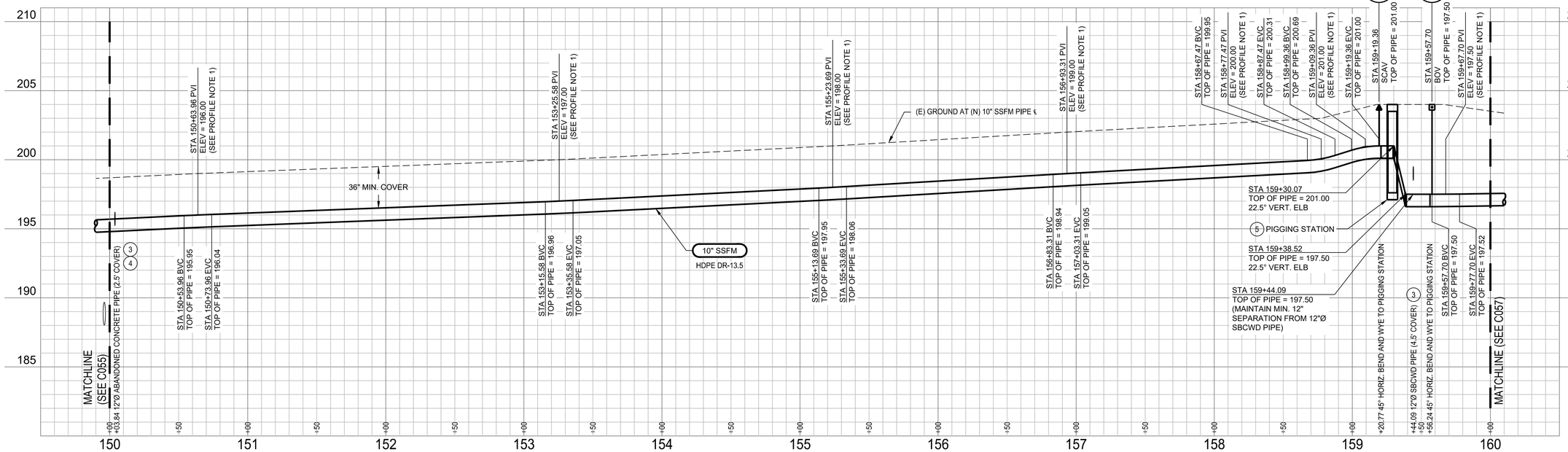

PROFILE NOTES

1. VERTICAL CURVES ARE WITHIN MANUFACTURER'S ALOWABLE PIPE DEFLECTION RADIUS (MINIMUM 62.7').
2. FIBER CONDUIT AND PULL BOXES NOT SHOWN, SEE PLAN VIEW AND SPECIFICATIONS. FOR UTILITY ELEVATION CONFLICTS, ADJUST IN THE FIELD AS APPROVED BY THE ENGINEER.

PROFILE LEGEND

SANITARY SEWER PIPE

HORIZONTAL BEND

1"=40'H 0 40' 60' 80'

1"=4'V 0 4 6 8

ORIGINAL SHEET - ANSI D

V:\1BAD\active\184031441\drawing\sct\31441-c051-c060 2022.01.12 8:33:55 AM

Revision	By	Appd.	YY.MM.DD
BID SET	KM	GIA	2022.12.30
PERMIT SET	KM	GIA	2022.10.10
Issued	By	Appd	YYYY.MM.DD

Permit/Seal

REGISTERED PROFESSIONAL ENGINEER GABRIEL T. ARONOW No.55607 Exp.12/31/24 CIVIL STATE OF CALIFORNIA

12/30/2022

Consultant

Stantec

Stantec Consulting Services Inc.
3875 Atherton Road
Rocklin CA 95765-3716
Tel:(916) 773-8100
www.stantec.com

Copyright Reserved

The Contractor shall verify and be responsible for all dimensions. DO NOT scale the drawing - any errors or omissions shall be reported to Stantec without delay. The Copyrights to all designs and drawings are the property of Stantec. Reproduction or use for any purpose other than that authorized by Stantec is forbidden.

Client/Project Logo

Client/Project

City of San Juan Bautista

SANITARY SEWER FORCE MAIN TO HOLLISTER PROJECT

San Juan Bautista, California

File Name: 31441-C051-C060	AV	KM, AV	GIA	2022.12.30
	Dwn.	Dsgn.	Chkd.	YYYY.MM.DD

Title

PLAN AND PROFILE
SAN JUSTO RD & LUCY BROWN LN
STA. 150+00 TO 160+00

Project No.	Scale
184031441	AS SHOWN
Revision	Sheet
0	47 of 128

Drawing No. C056

UNDERGROUND SERVICE ALERT

CALL: 811

TWO WORKING DAYS BEFORE YOU DIG

*** CAUTION ***

BURIED AND OVERHEAD UTILITIES

CONTRACTOR TO COORDINATE WORK WITH PG&E, AT&T, SBCWD, CITY OF SAN JUAN BAUTISTA, CITY OF HOLLISTER AND ANY OTHER UTILITY COMPANIES OBSERVED ADJACENT TO THE PROJECT PRIOR TO WORKING IN THE AREA OF THEIR UTILITIES

CONSTRUCTION NOTES

1. CAUTION: OVERHEAD ELECTRIC AND/OR COMMUNICATION UTILITY CROSSING.
2. PLACE PULL BOXES IN THE SHOULDER, 3' OFF THE AC PAVEMENT, UNO.
3. EXISTING UNDERGROUND UTILITY LOCATIONS AND DEPTHS ARE APPROXIMATE AND BASED ON AVAILABLE AS-BUILT INFORMATION. CONTRACTOR TO POTHOLE AND VERIFY EXACT LOCATIONS AND DEPTHS THREE DAYS MINIMUM PRIOR TO COMMENCEMENT OF WORK, AND NOTIFY ENGINEER OF ANY DISCREPANCIES.
4. BUTT FUSION ELBOWS SHALL BE RADIUS ELBOWS (NOT MITERED ELBOWS).

GENERAL NOTES

1. SEE DWG C081 FOR NEW SSFM ALIGNMENT CURVE AND LINE TABLES.
2. ALL WORK MUST BE COMPLETED WITHIN THE ROW, OUTSIDE OF DRAINAGE DITCHES. NO WORK OR ACCESS IS ALLOWED IN THE DRAINAGE DITCHES.
3. PROVIDE STAKES FOR THE 10" HDPE SSFM AT 250 FT INTERVALS AND AT ALL CHANGES IN ALIGNMENT, END OF PIPE AND BURIED VALVES. STAKES MAY BE OFFSET TO AVOID DRIVE AREAS (IN THE SHOULDER) AS APPROVED BY THE ENGINEER.
4. SEE DWG C003 FOR AC OVERLAY, PAVING, PIPE TRENCH DETAILS, AND CONDUIT TRENCH DETAILS.

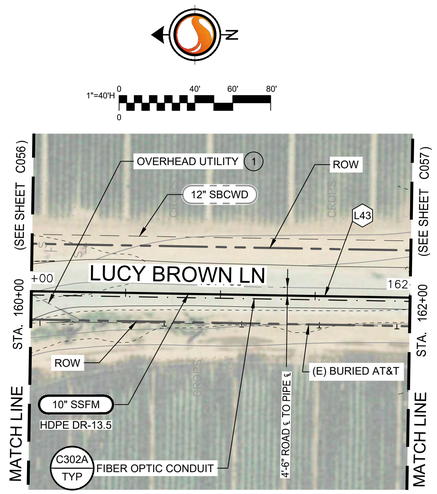

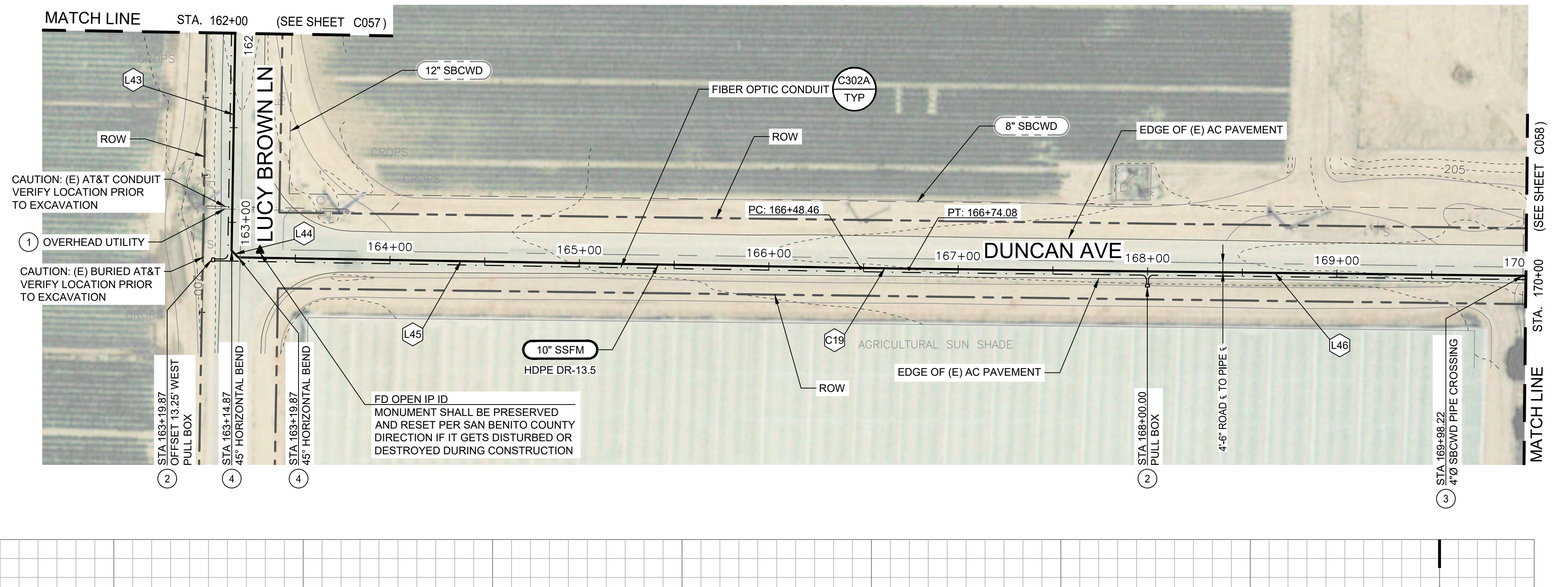

PLAN VIEW LEGEND

- EXISTING PIPE — 8" SS
- NEW PIPE — 10" SSFM
- FIBER OPTIC CONDUIT
- FIBER OPTIC PULL BOX

PROFILE NOTES

1. VERTICAL CURVES ARE WITHIN MANUFACTURER'S ALOWABLE PIPE DEFLECTION RADIUS (MINIMUM 62.7').
2. FIBER CONDUIT AND PULL BOXES NOT SHOWN. SEE PLAN VIEW AND SPECIFICATIONS. FOR UTILITY ELEVATION CONFLICTS, ADJUST IN THE FIELD AS APPROVED BY THE ENGINEER.

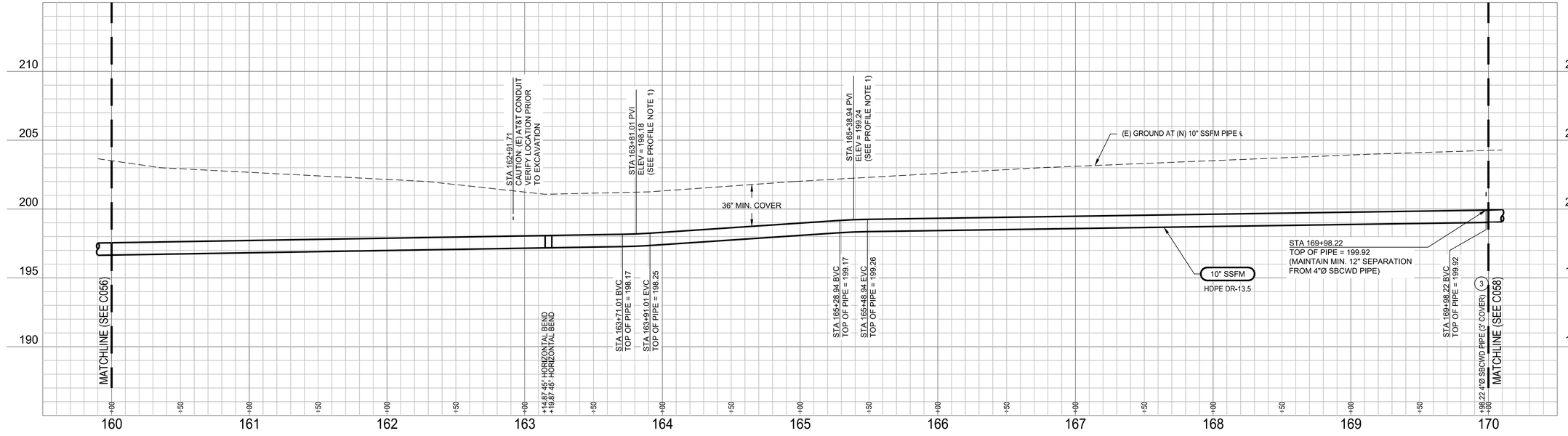

PROFILE LEGEND

- SANITARY SEWER PIPE
- HORIZONTAL BEND

Revision	By	Appd.	YY.MM.DD
BID SET	KM	GIA	2022.12.30
PERMIT SET	KM	GIA	2022.10.10
Issued	By	Appd	YYYY.MM.DD

Permit/Seal

REGISTERED PROFESSIONAL ENGINEER — GABRIEL I. ARONOW — No.55807 — Exp.12/31/24 — CIVIL — STATE OF CALIFORNIA

12/30/2022

Consultant

Stantec

Stantec Consulting Services Inc.
3875 Atherton Road
Rocklin CA 95765-3716
Tel: (916) 773-8100
www.stantec.com

Copyright Reserved

The Contractor shall verify and be responsible for all dimensions. DO NOT scale the drawing - any errors or omissions shall be reported to Stantec without delay. The Copyrights to all designs and drawings are the property of Stantec. Reproduction or use for any purpose other than that authorized by Stantec is forbidden.

Client/Project Logo

Client/Project

City of San Juan Bautista

SANITARY SEWER FORCE MAIN TO HOLLISTER PROJECT

San Juan Bautista, California

File Name: 31441-C051-C060 | AV Dwn. | KM, AV Dsgn. | GIA Chkd. | 2022.12.30 YYYY.MM.DD

Title

PLAN AND PROFILE
LUCY BROWN LN AND DUNCAN AVE
STA. 160+00 TO 170+00

Project No.	Scale
184031441	AS SHOWN
Revision	Sheet
0	48 of 128

Drawing No. C057

ORIGINAL SHEET - ANSI D

Y:\1MD\active\184031441\drawing\civil\31441-C051-C060 2023.01.12 8:13:04 AM

UNDERGROUND SERVICE ALERT

CALL: 811

TWO WORKING DAYS BEFORE YOU DIG

*** CAUTION ***

BURIED AND OVERHEAD UTILITIES

CONTRACTOR TO COORDINATE WORK WITH PG&E, AT&T, SBCWD, CITY OF SAN JUAN BAUTISTA, CITY OF HOLLISTER AND ANY OTHER UTILITY COMPANIES OBSERVED ADJACENT TO THE PROJECT PRIOR TO WORKING IN THE AREA OF THEIR UTILITIES

CONSTRUCTION NOTES

1. CAUTION: OVERHEAD ELECTRIC AND/OR COMMUNICATION UTILITY CROSSING.
2. PLACE PULL BOXES IN THE SHOULDER, 3' OFF THE AC PAVEMENT, UNO.

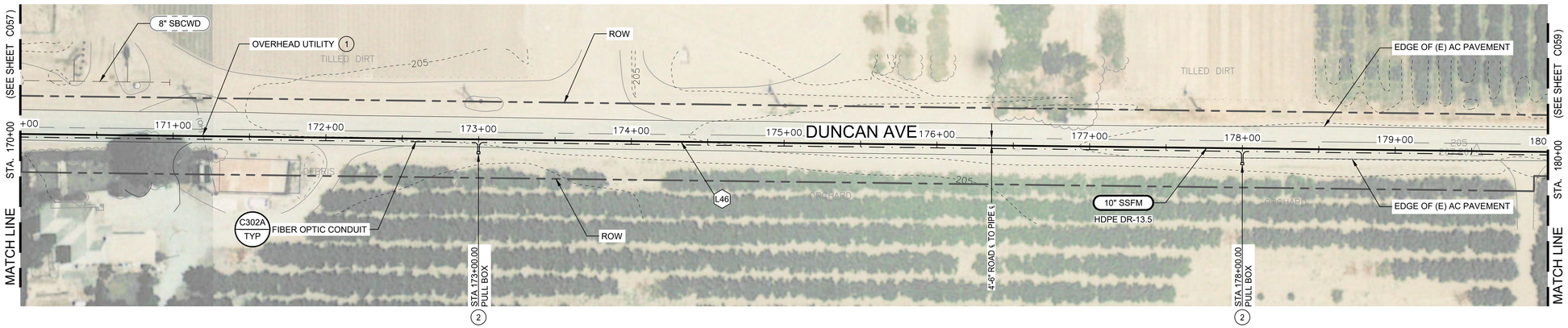

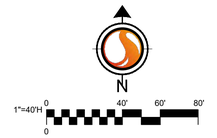

PLAN VIEW LEGEND

EXISTING PIPE	8" SS
NEW PIPE	10" SSFM
FIBER OPTIC CONDUIT	
FIBER OPTIC PULL BOX	

GENERAL NOTES

1. SEE DWG C081 FOR NEW SSFM ALIGNMENT CURVE AND LINE TABLES.
2. ALL WORK MUST BE COMPLETED WITHIN THE ROW, OUTSIDE OF DRAINAGE DITCHES. NO WORK OR ACCESS IS ALLOWED IN THE DRAINAGE DITCHES.
3. PROVIDE STAKES FOR THE 10" HDPE SSFM AT 250 FT INTERVALS AND AT ALL CHANGES IN ALIGNMENT, END OF PIPE AND BURIED VALVES. STAKES MAY BE OFFSET TO AVOID DRIVE AREAS (IN THE SHOULDER) AS APPROVED BY THE ENGINEER.
4. SEE DWG C003 FOR AC OVERLAY, PAVING, PIPE TRENCH DETAILS, AND CONDUIT TRENCH DETAILS.

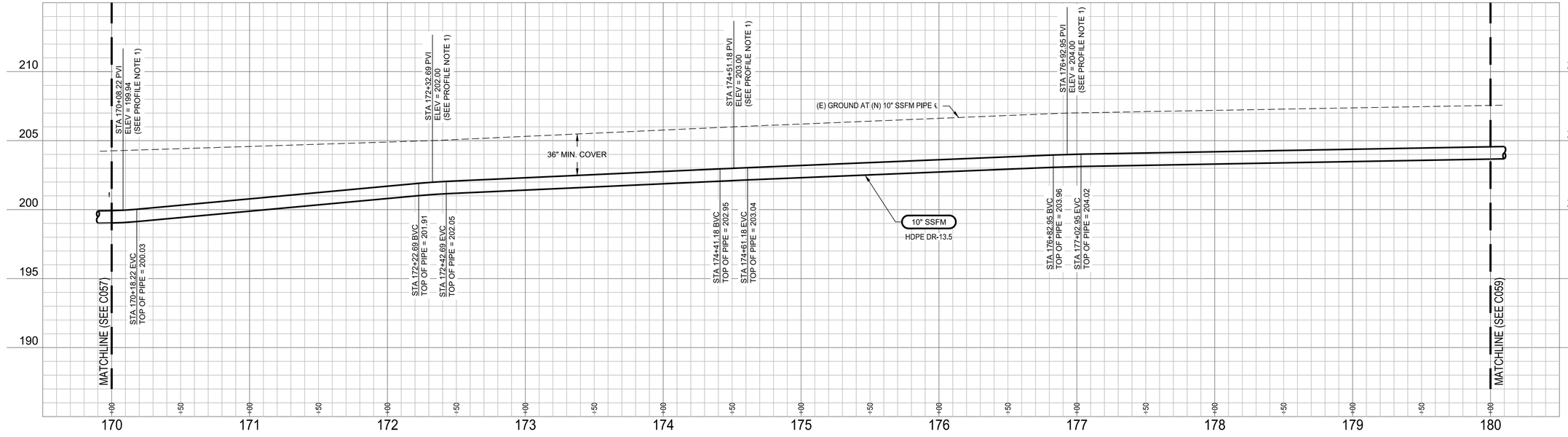

PROFILE NOTES

1. VERTICAL CURVES ARE WITHIN MANUFACTURER'S ALOWABLE PIPE DEFLECTION RADIUS (MINIMUM 62.7').
2. FIBER CONDUIT AND PULL BOXES NOT SHOWN. SEE PLAN VIEW AND SPECIFICATIONS. FOR UTILITY ELEVATION CONFLICTS, ADJUST IN THE FIELD AS APPROVED BY THE ENGINEER.

PROFILE LEGEND

SANITARY SEWER PIPE

HORIZONTAL BEND

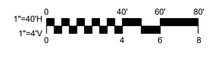

Revision	By	Appd.	YY.MM.DD
BID SET	KM	GIA	2022.12.30
PERMIT SET	KM	GIA	2022.10.10
Issued	By	Appd	YYYY.MM.DD

Permit/Seal

REGISTERED PROFESSIONAL ENGINEER
GABRIEL I. ARONOW
No.55807
Exp.12/31/24
STATE OF CALIFORNIA
CIVIL

12/30/2022

Consultant

Stantec

Stantec Consulting Services Inc.
3875 Atherton Road
Rocklin CA 95765-3716
Tel: (916) 773-8100
www.stantec.com

Copyright Reserved

The Contractor shall verify and be responsible for all dimensions. DO NOT scale the drawing - any errors or omissions shall be reported to Stantec without delay. The Copyrights to all designs and drawings are the property of Stantec. Reproduction or use for any purpose other than that authorized by Stantec is forbidden.

Client/Project Logo

Client/Project

City of San Juan Bautista

SANITARY SEWER FORCE MAIN TO HOLLISTER PROJECT

San Juan Bautista, California

File Name: 31441-C051-C060	AV	KM, AV	GIA	2022.12.30
	Dwn.	Dsgn.	Chkd.	YYYY.MM.DD

Title

PLAN AND PROFILE
DUNCAN AVE
STA. 170+00 TO 180+00

Project No.	Scale
184031441	AS SHOWN
Revision	Sheet / Drawing No.
0	49 of 128 — C058

ORIGINAL SHEET - ANSI D

\\<\1MR\path\1MR031441\drawing\civil\31441-C051-C060 2023.01.12 8:14:50 AM

UNDERGROUND SERVICE ALERT

CALL: 811

TWO WORKING DAYS BEFORE YOU DIG

*** CAUTION ***

BURIED AND OVERHEAD UTILITIES

CONTRACTOR TO COORDINATE WORK WITH PG&E, AT&T, SBCWD, CITY OF SAN JUAN BAUTISTA, CITY OF HOLLISTER AND ANY OTHER UTILITY COMPANIES OBSERVED ADJACENT TO THE PROJECT PRIOR TO WORKING IN THE AREA OF THEIR UTILITIES

CONSTRUCTION NOTES

1. CAUTION: OVERHEAD ELECTRIC AND/OR COMMUNICATION UTILITY CROSSING.
2. PLACE PULL BOXES IN THE SHOULDER, 3' OFF THE AC PAVEMENT, UNO.

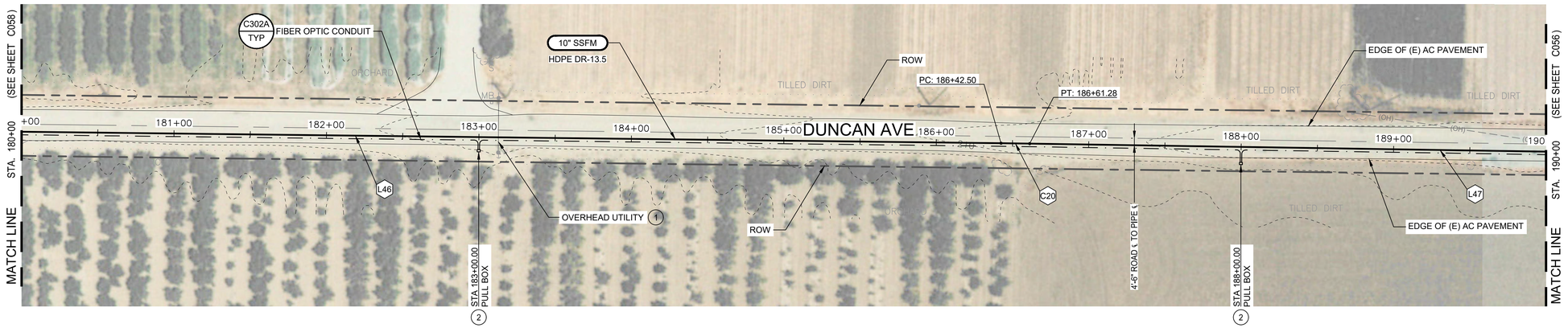

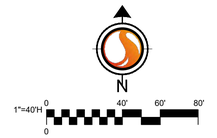

PLAN VIEW LEGEND

- EXISTING PIPE — 8" SS
- NEW PIPE — 10" SSFM
- FIBER OPTIC CONDUIT
- FIBER OPTIC PULL BOX

GENERAL NOTES

1. SEE DWG C081 FOR NEW SSFM ALIGNMENT CURVE AND LINE TABLES.
2. ALL WORK MUST BE COMPLETED WITHIN THE ROW, OUTSIDE OF DRAINAGE DITCHES. NO WORK OR ACCESS IS ALLOWED IN THE DRAINAGE DITCHES.
3. PROVIDE STAKES FOR THE 10" HDPE SSFM AT 250 FT INTERVALS AND AT ALL CHANGES IN ALIGNMENT, END OF PIPE AND BURIED VALVES. STAKES MAY BE OFFSET TO AVOID DRIVE AREAS (IN THE SHOULDER) AS APPROVED BY THE ENGINEER.
4. SEE DWG C003 FOR AC OVERLAY, PAVING, PIPE TRENCH DETAILS, AND CONDUIT TRENCH DETAILS.

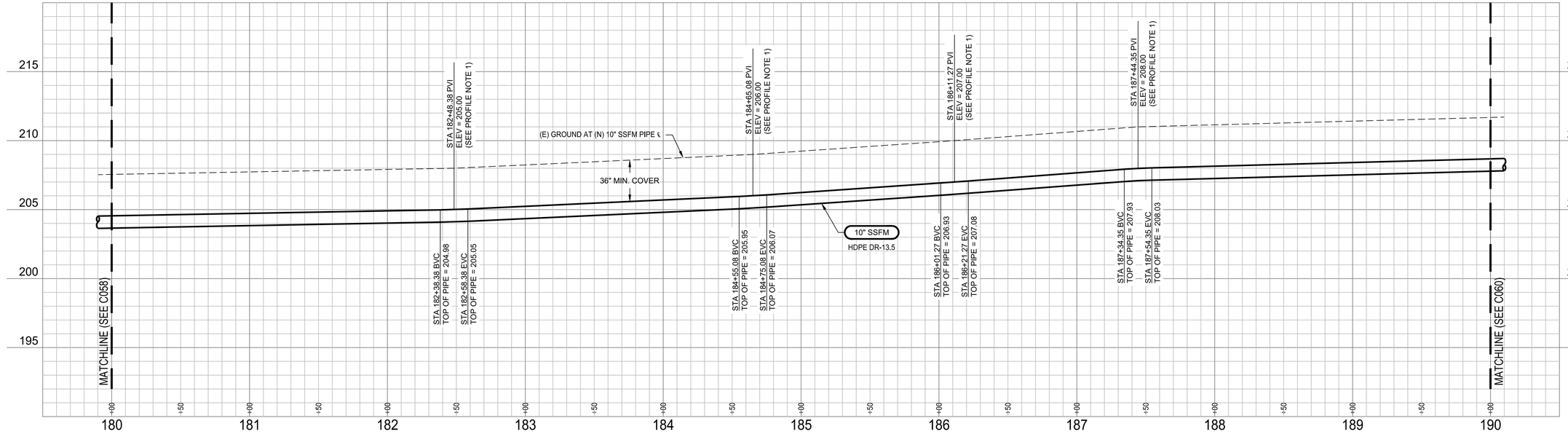

PROFILE NOTES

1. VERTICAL CURVES ARE WITHIN MANUFACTURER'S ALOWABLE PIPE DEFLECTION RADIUS (MINIMUM 62.7').
2. FIBER CONDUIT AND PULL BOXES NOT SHOWN. SEE PLAN VIEW AND SPECIFICATIONS. FOR UTILITY ELEVATION CONFLICTS, ADJUST IN THE FIELD AS APPROVED BY THE ENGINEER.

PROFILE LEGEND

- SANITARY SEWER PIPE
- HORIZONTAL BEND

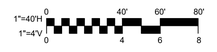

Revision	By	Appd.	YY.MM.DD
BID SET	KM	GIA	2022.12.30
PERMIT SET	KM	GIA	2022.10.10
Issued	By	Appd	YYYY.MM.DD

Permit/Seal

REGISTERED PROFESSIONAL ENGINEER
GABRIEL I. ARONOW
No.55607
Exp.12/31/24
CIVIL
STATE OF CALIFORNIA

12/30/2022

Consultant

Stantec

Stantec Consulting Services Inc.
3875 Atherton Road
Rocklin CA 95765-3716
Tel: (916) 773-8100
www.stantec.com

Copyright Reserved

The Contractor shall verify and be responsible for all dimensions. DO NOT scale the drawing - any errors or omissions shall be reported to Stantec without delay. The Copyrights to all designs and drawings are the property of Stantec. Reproduction or use for any purpose other than that authorized by Stantec is forbidden.

Client/Project Logo

Client/Project

City of San Juan Bautista

SANITARY SEWER FORCE MAIN TO HOLLISTER PROJECT

San Juan Bautista, California

File Name: 31441-C051-C060	AV	KM, AV	GIA	2022.12.30
	Dwn.	Dsgn.	Chkd.	YYYY.MM.DD

Title

PLAN AND PROFILE
DUNCAN AVE
STA. 180+00 TO 190+00

Project No.	Scale
184031441	AS SHOWN
Revision	Sheet
0	50 of 128

Drawing No.

C059

ORIGINAL SHEET - ANSI D

\\<\LMR\Jobs\active\184031441\Cad\wrkg\dwt\31441-C051-C060 2023.03.17 8:15:53 AM

UNDERGROUND SERVICE ALERT

CALL: 811

TWO WORKING DAYS BEFORE YOU DIG

*** CAUTION ***

BURIED AND OVERHEAD UTILITIES

CONTRACTOR TO COORDINATE WORK WITH PG&E, AT&T, SBCWD, CITY OF SAN JUAN BAUTISTA, CITY OF HOLLISTER AND ANY OTHER UTILITY COMPANIES OBSERVED ADJACENT TO THE PROJECT PRIOR TO WORKING IN THE AREA OF THEIR UTILITIES

CONSTRUCTION NOTES

1. CAUTION: OVERHEAD ELECTRIC AND/OR COMMUNICATION UTILITY CROSSING.
2. PLACE PULL BOXES IN THE SHOULDER, 3' OFF THE AC PAVEMENT, UNO.

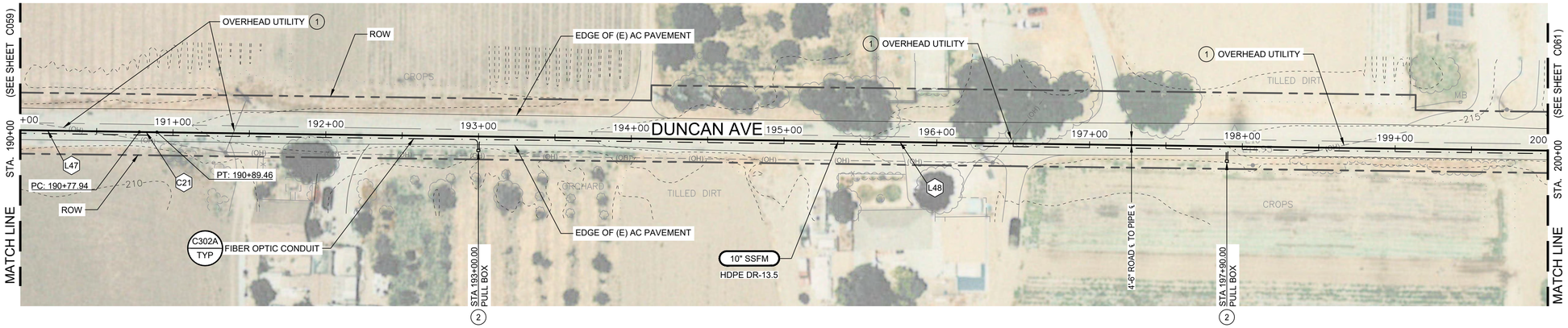

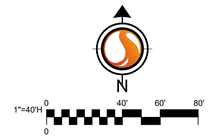

PLAN VIEW LEGEND

- EXISTING PIPE — 8" SS
- NEW PIPE — 10" SSFM
- FIBER OPTIC CONDUIT
- FIBER OPTIC PULL BOX

GENERAL NOTES

1. SEE DWG C081 FOR NEW SSFM ALIGNMENT CURVE AND LINE TABLES.
2. ALL WORK MUST BE COMPLETED WITHIN THE ROW, OUTSIDE OF DRAINAGE DITCHES. NO WORK OR ACCESS IS ALLOWED IN THE DRAINAGE DITCHES.
3. PROVIDE STAKES FOR THE 10" HDPE SSFM AT 250 FT INTERVALS AND AT ALL CHANGES IN ALIGNMENT, END OF PIPE AND BURIED VALVES. STAKES MAY BE OFFSET TO AVOID DRIVE AREAS (IN THE SHOULDER) AS APPROVED BY THE ENGINEER.
4. SEE DWG C003 FOR AC OVERLAY, PAVING, PIPE TRENCH DETAILS, AND CONDUIT TRENCH DETAILS.

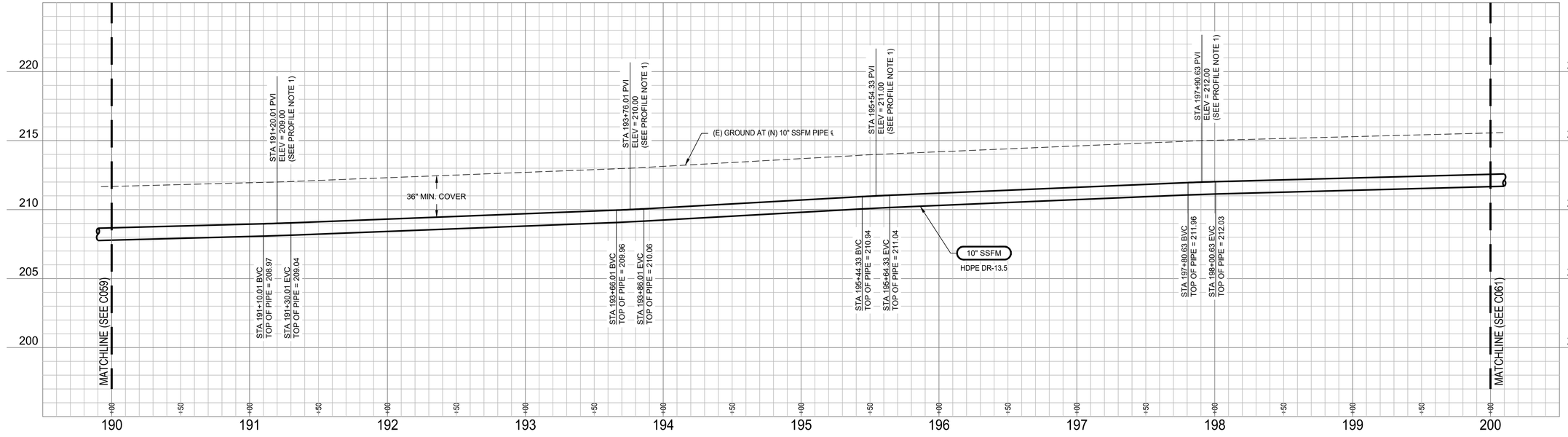

PROFILE NOTES

1. VERTICAL CURVES ARE WITHIN MANUFACTURER'S ALOWABLE PIPE DEFLECTION RADIUS (MINIMUM 62.7').
2. FIBER CONDUIT AND PULL BOXES NOT SHOWN. SEE PLAN VIEW AND SPECIFICATIONS. FOR UTILITY ELEVATION CONFLICTS, ADJUST IN THE FIELD AS APPROVED BY THE ENGINEER.

PROFILE LEGEND

- SANITARY SEWER PIPE
- HORIZONTAL BEND

Revision	By	Appd.	YY.MM.DD
BID SET	KM	GIA	2022.12.30
PERMIT SET	KM	GIA	2022.10.10
Issued	By	Appd	YYYY.MM.DD

Permit/Seal

REGISTERED PROFESSIONAL ENGINEER
GABRIEL I. ARONOW
No.55607
Exp.12/31/24
CIVIL
STATE OF CALIFORNIA

12/30/2022

Consultant

Stantec

Stantec Consulting Services Inc.
3875 Atherton Road
Rocklin CA 95765-3716
Tel: (916) 773-8100
www.stantec.com

Copyright Reserved

The Contractor shall verify and be responsible for all dimensions. DO NOT scale the drawing - any errors or omissions shall be reported to Stantec without delay. The Copyrights to all designs and drawings are the property of Stantec. Reproduction or use for any purpose other than that authorized by Stantec is forbidden.

Client/Project Logo

Client/Project

City of San Juan Bautista

SANITARY SEWER FORCE MAIN TO HOLLISTER PROJECT

San Juan Bautista, California

File Name: 31441-C051-C060 | AV Dwn. | KM, AV Dsgn. | GIA Chkd. | 2022.12.30 YYYY.MM.DD

Title

PLAN AND PROFILE
DUNCAN AVE
STA. 190+00 TO 200+00

Project No. 184031441

Scale AS SHOWN

Revision 0 | Sheet 51 of 128

Drawing No. C060

ORIGINAL SHEET - ANSI D

\\<\MPLocPath\1MP031441\Drawing\civil\31441-C051-C060 2023.01.12 8:47 AM

UNDERGROUND SERVICE ALERT

CALL: 811

TWO WORKING DAYS BEFORE YOU DIG

*** CAUTION ***

BURIED AND OVERHEAD UTILITIES

CONTRACTOR TO COORDINATE WORK WITH PG&E, AT&T, SBCWD, CITY OF SAN JUAN BAUTISTA, CITY OF HOLLISTER AND ANY OTHER UTILITY COMPANIES OBSERVED ADJACENT TO THE PROJECT PRIOR TO WORKING IN THE AREA OF THEIR UTILITIES

CONSTRUCTION NOTES

1. CAUTION: OVERHEAD ELECTRIC AND/OR COMMUNICATION UTILITY CROSSING.
2. PLACE PULL BOXES IN THE SHOULDER, 3' OFF THE AC PAVEMENT, UNO.

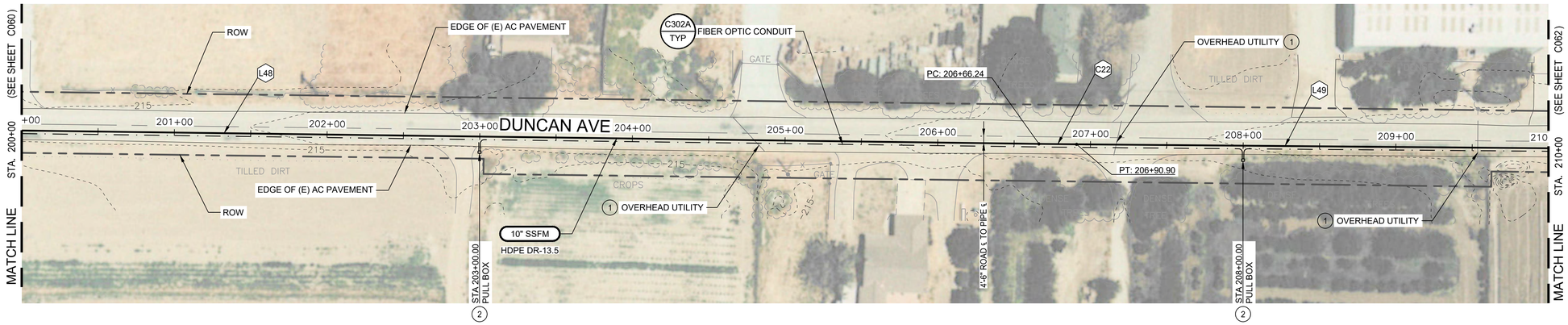

N

1"=40'H 0 40' 60' 80'
0

PLAN VIEW LEGEND

- EXISTING PIPE — 8" SS
- NEW PIPE — 10" SSFM
- FIBER OPTIC CONDUIT
- FIBER OPTIC PULL BOX

GENERAL NOTES

1. SEE DWG C081 FOR NEW SSFM ALIGNMENT CURVE AND LINE TABLES.
2. ALL WORK MUST BE COMPLETED WITHIN THE ROW, OUTSIDE OF DRAINAGE DITCHES. NO WORK OR ACCESS IS ALLOWED IN THE DRAINAGE DITCHES.
3. PROVIDE STAKES FOR THE 10" HDPE SSFM AT 250 FT INTERVALS AND AT ALL CHANGES IN ALIGNMENT, END OF PIPE AND BURIED VALVES. STAKES MAY BE OFFSET TO AVOID DRIVE AREAS (IN THE SHOULDER) AS APPROVED BY THE ENGINEER.
4. SEE DWG C003 FOR AC OVERLAY, PAVING, PIPE TRENCH DETAILS, AND CONDUIT TRENCH DETAILS.

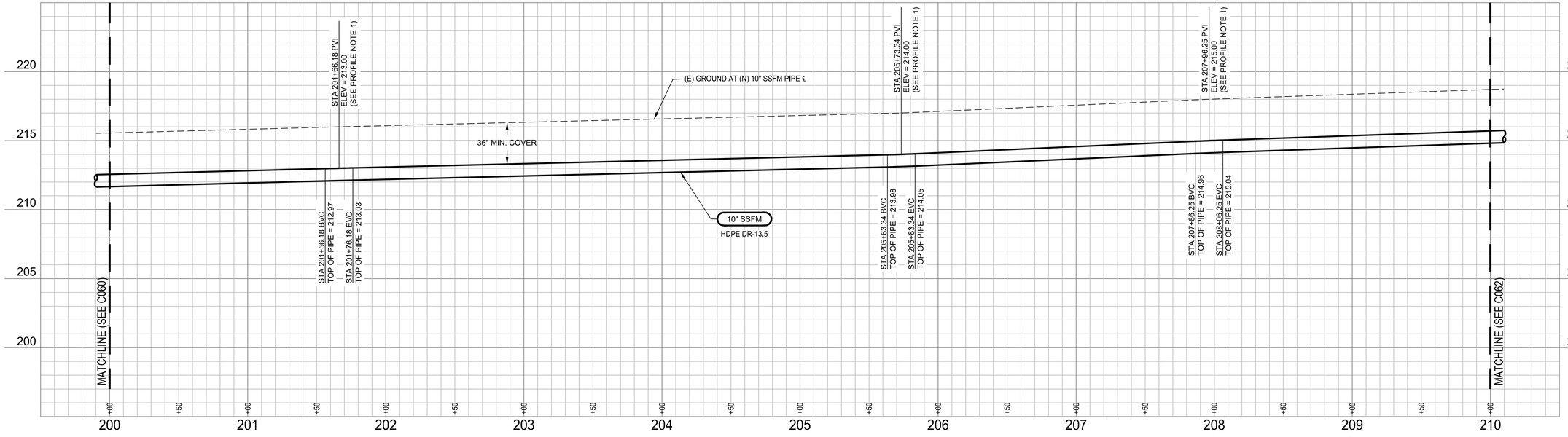

PROFILE NOTES

1. VERTICAL CURVES ARE WITHIN MANUFACTURER'S ALOWABLE PIPE DEFLECTION RADIUS (MINIMUM 62.7').
2. FIBER CONDUIT AND PULL BOXES NOT SHOWN. SEE PLAN VIEW AND SPECIFICATIONS. FOR UTILITY ELEVATION CONFLICTS, ADJUST IN THE FIELD AS APPROVED BY THE ENGINEER.

PROFILE LEGEND

- SANITARY SEWER PIPE
- HORIZONTAL BEND

1"=40'H 0 40' 60' 80'
1"=4'V 0 4 6 8

Revision	By	Appd.	YY.MM.DD
BID SET	KM	GIA	2022.12.30
PERMIT SET	KM	GIA	2022.10.10
Issued	By	Appd	YYYY.MM.DD

Permit/Seal

REGISTERED PROFESSIONAL ENGINEER GABRIEL I. ARONOW No.55607 Exp.12/31/24 CIVIL STATE OF CALIFORNIA

12/30/2022

Consultant

Stantec

Stantec Consulting Services Inc.
3875 Atherton Road
Rocklin CA 95765-3716
Tel: (916) 773-8100
www.stantec.com

Copyright Reserved

The Contractor shall verify and be responsible for all dimensions. DO NOT scale the drawing - any errors or omissions shall be reported to Stantec without delay. The Copyrights to all designs and drawings are the property of Stantec. Reproduction or use for any purpose other than that authorized by Stantec is forbidden.

Client/Project Logo

Client/Project

City of San Juan Bautista

SANITARY SEWER FORCE MAIN TO HOLLISTER PROJECT

San Juan Bautista, California

File Name: 31441-C061-C070	AV	KM, AV	GIA	2022.12.30
	Dwn.	Dsgn.	Chkd.	YYYY.MM.DD

Title

PLAN AND PROFILE
DUNCAN AVE
STA. 200+00 TO 210+00

Project No.	Scale
184031441	AS SHOWN
Revision	Sheet
0	52 of 128

Drawing No.

C061

ORIGINAL SHEET - ANSI D

\\<LMD\active\184031441\project\civil\31441-C061-C070 2020.01 12:22:31 AM

UNDERGROUND SERVICE ALERT

CALL: 811

TWO WORKING DAYS BEFORE YOU DIG

*** CAUTION ***

BURIED AND OVERHEAD UTILITIES

CONTRACTOR TO COORDINATE WORK WITH PG&E, AT&T, SBCWD, CITY OF SAN JUAN BAUTISTA, CITY OF HOLLISTER AND ANY OTHER UTILITY COMPANIES OBSERVED ADJACENT TO THE PROJECT PRIOR TO WORKING IN THE AREA OF THEIR UTILITIES

CONSTRUCTION NOTES

1. CAUTION: OVERHEAD ELECTRIC AND/OR COMMUNICATION UTILITY CROSSING.
2. PLACE PULL BOXES AND SCAV VALVE BOXES IN THE SHOULDER, 3' OFF THE AC PAVEMENT, UNO.
3. BUTT FUSION ELBOWS SHALL BE RADIUS ELBOWS (NOT MITERED ELBOWS).

N

1"=40'H 0 40' 60' 80'

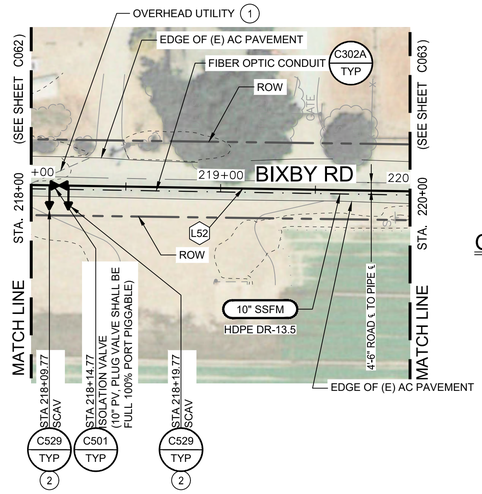

PLAN VIEW LEGEND

- EXISTING PIPE — 8" SS
- NEW PIPE — 10" SSFM
- FIBER OPTIC CONDUIT
- FIBER OPTIC PULL BOX

GENERAL NOTES

1. SEE DWG C081 FOR NEW SSFM ALIGNMENT CURVE AND LINE TABLES.
2. ALL WORK MUST BE COMPLETED WITHIN THE ROW, OUTSIDE OF DRAINAGE DITCHES. NO WORK OR ACCESS IS ALLOWED IN THE DRAINAGE DITCHES.
3. PROVIDE STAKES FOR THE 10" HDPE SSFM AT 250 FT INTERVALS AND AT ALL CHANGES IN ALIGNMENT, END OF PIPE AND BURIED VALVES. STAKES MAY BE OFFSET TO AVOID DRIVE AREAS (IN THE SHOULDER) AS APPROVED BY THE ENGINEER.
4. SEE DWG C003 FOR AC OVERLAY, PAVING, PIPE TRENCH DETAILS, AND CONDUIT TRENCH DETAILS.

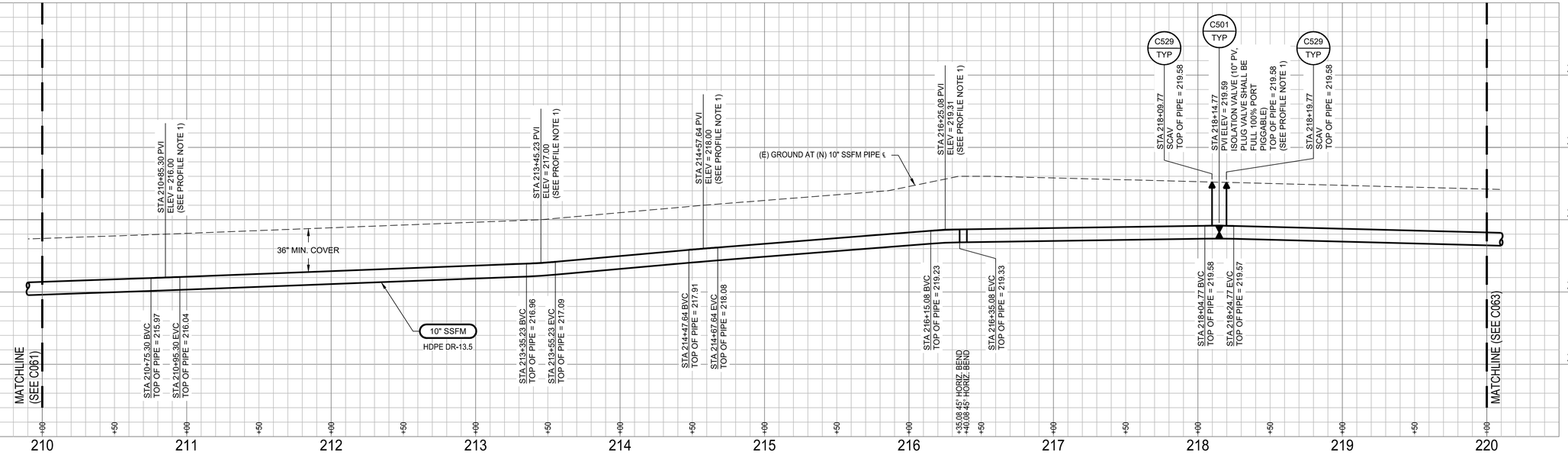

PROFILE NOTES

1. VERTICAL CURVES ARE WITHIN MANUFACTURER'S ALOWABLE PIPE DEFLECTION RADIUS (MINIMUM 62.7').
2. FIBER CONDUIT AND PULL BOXES NOT SHOWN. SEE PLAN VIEW AND SPECIFICATIONS. FOR UTILITY ELEVATION CONFLICTS, ADJUST IN THE FIELD AS APPROVED BY THE ENGINEER.

PROFILE LEGEND

- SANITARY SEWER PIPE
- HORIZONTAL BEND

1"=40'H 0 40' 60' 80'
1"=4'V 0 4 6 8

Revision	By	Appd.	YY.MM.DD
BID SET	KM	GIA	2022.12.30
PERMIT SET	KM	GIA	2022.10.10
Issued	By	Appd	YYYY.MM.DD

Permit/Seal

REGISTERED PROFESSIONAL ENGINEER GABRIEL I. ARONOW No.55807 Exp.12/31/24 CIVIL STATE OF CALIFORNIA

12/30/2022

Consultant

Stantec

Stantec Consulting Services Inc.
3875 Atherton Road
Rocklin CA 95765-3716
Tel: (916) 773-8100
www.stantec.com

Copyright Reserved
The Contractor shall verify and be responsible for all dimensions. DO NOT scale the drawing - any errors or omissions shall be reported to Stantec without delay. The Copyrights to all designs and drawings are the property of Stantec. Reproduction or use for any purpose other than that authorized by Stantec is forbidden.

Client/Project Logo

Client/Project

City of San Juan Bautista

SANITARY SEWER FORCE MAIN TO HOLLISTER PROJECT

San Juan Bautista, California

File Name: 31441-C061-C070 | AV Dwn. | KM, AV Dsgn. | GIA Chkd. | 2022.12.30 YYYY.MM.DD

Title

PLAN AND PROFILE
DUNCAN AVE AND BIXBY RD
STA. 210+00 TO 220+00

Project No. 184031441 | Scale AS SHOWN

Revision 0 | Sheet 53 of 128 | Drawing No. C062

ORIGINAL SHEET - ANSI D

\\<\.\IMPLcprfnv\184031441\Gdrawing\civil\31441-C061-C070 2023.03.17 8:22:25 AM AM

UNDERGROUND SERVICE ALERT

CALL: 811

TWO WORKING DAYS BEFORE YOU DIG

*** CAUTION ***

BURIED AND OVERHEAD UTILITIES

CONTRACTOR TO COORDINATE WORK WITH PG&E, AT&T, SBCWD, CITY OF SAN JUAN BAUTISTA, CITY OF HOLLISTER AND ANY OTHER UTILITY COMPANIES OBSERVED ADJACENT TO THE PROJECT PRIOR TO WORKING IN THE AREA OF THEIR UTILITIES

CONSTRUCTION NOTES

1. CAUTION: OVERHEAD ELECTRIC AND/OR COMMUNICATION UTILITY CROSSING.
2. PLACE PULL BOXES IN THE SHOULDER, 3' OFF THE AC PAVEMENT, UNO.

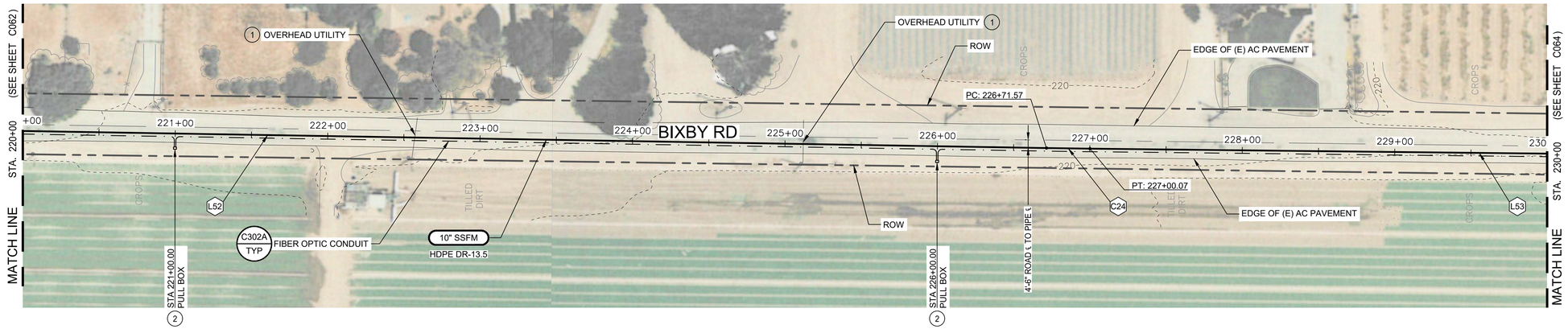

1"=40'H

PLAN VIEW LEGEND

- EXISTING PIPE — 8" SS
- NEW PIPE — 10" SSFM
- FIBER OPTIC CONDUIT
- FIBER OPTIC PULL BOX

GENERAL NOTES

1. SEE DWG C081 FOR NEW SSFM ALIGNMENT CURVE AND LINE TABLES.
2. ALL WORK MUST BE COMPLETED WITHIN THE ROW, OUTSIDE OF DRAINAGE DITCHES. NO WORK OR ACCESS IS ALLOWED IN THE DRAINAGE DITCHES.
3. PROVIDE STAKES FOR THE 10" HDPE SSFM AT 250 FT INTERVALS AND AT ALL CHANGES IN ALIGNMENT, END OF PIPE AND BURIED VALVES. STAKES MAY BE OFFSET TO AVOID DRIVE AREAS (IN THE SHOULDER) AS APPROVED BY THE ENGINEER.
4. SEE DWG C003 FOR AC OVERLAY, PAVING, PIPE TRENCH DETAILS, AND CONDUIT TRENCH DETAILS.

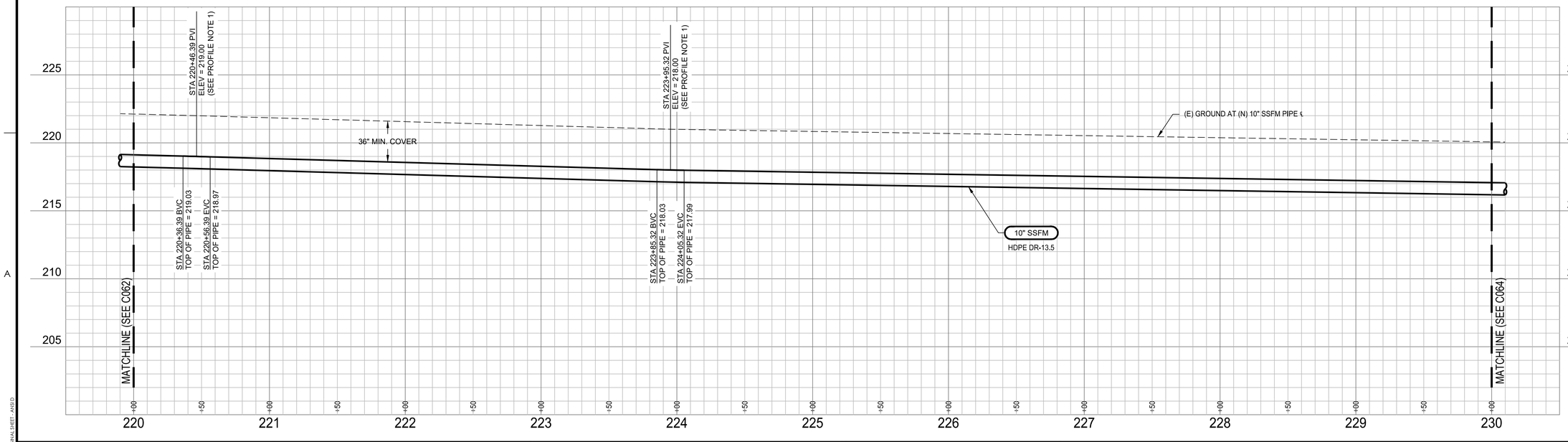

PROFILE NOTES

1. VERTICAL CURVES ARE WITHIN MANUFACTURER'S ALOWABLE PIPE DEFLECTION RADIUS (MINIMUM 62.7').
2. FIBER CONDUIT AND PULL BOXES NOT SHOWN. SEE PLAN VIEW AND SPECIFICATIONS. FOR UTILITY ELEVATION CONFLICTS, ADJUST IN THE FIELD AS APPROVED BY THE ENGINEER.

PROFILE LEGEND

- SANITARY SEWER PIPE
- HORIZONTAL BEND

1"=40'H
1"=4'V

Revision	By	Appd.	YY.MM.DD
BID SET	KM	GIA	2022.12.30
PERMIT SET	KM	GIA	2022.10.10
Issued	By	Appd	YYYY.MM.DD

Permit/Seal

REGISTERED PROFESSIONAL ENGINEER
GABRIEL I. ARONOW
No.55607
Exp.12/31/24
CIVIL
STATE OF CALIFORNIA

12/30/2022

Consultant

Stantec

Stantec Consulting Services Inc.
3875 Atherton Road
Rocklin CA 95765-3716
Tel: (916) 773-8100
www.stantec.com

Copyright Reserved

The Contractor shall verify and be responsible for all dimensions. DO NOT scale the drawing - any errors or omissions shall be reported to Stantec without delay. The Copyrights to all designs and drawings are the property of Stantec. Reproduction or use for any purpose other than that authorized by Stantec is forbidden.

Client/Project Logo

Client/Project

City of San Juan Bautista

SANITARY SEWER FORCE MAIN TO HOLLISTER PROJECT

San Juan Bautista, California

File Name: 31441-C061-C070	AV	KM, AV	GIA	2022.12.30
	Dwn.	Dsgn.	Chkd.	YYYY.MM.DD

Title

PLAN AND PROFILE
BIXBY RD
STA. 220+00 TO 230+00

Project No.	Scale
184031441	AS SHOWN
Revision	Sheet
0	54 of 128

Drawing No.

C063

\\<\MP\.cpt\ev\184031441\Drawing\civil\31441-C061-C070 2023.03.17 8:27:17 AM

ORIGINAL SHEET - ANSI D

UNDERGROUND SERVICE ALERT

CALL: 811

TWO WORKING DAYS BEFORE YOU DIG

*** CAUTION ***

BURIED AND OVERHEAD UTILITIES

CONTRACTOR TO COORDINATE WORK WITH PG&E, AT&T, SBCWD, CITY OF SAN JUAN BAUTISTA, CITY OF HOLLISTER AND ANY OTHER UTILITY COMPANIES OBSERVED ADJACENT TO THE PROJECT PRIOR TO WORKING IN THE AREA OF THEIR UTILITIES

CONSTRUCTION NOTES

1. CAUTION: OVERHEAD ELECTRIC AND/OR COMMUNICATION UTILITY CROSSING.
2. PLACE PULL BOXES IN THE SHOULDER, 3' OFF THE AC PAVEMENT, UNO.

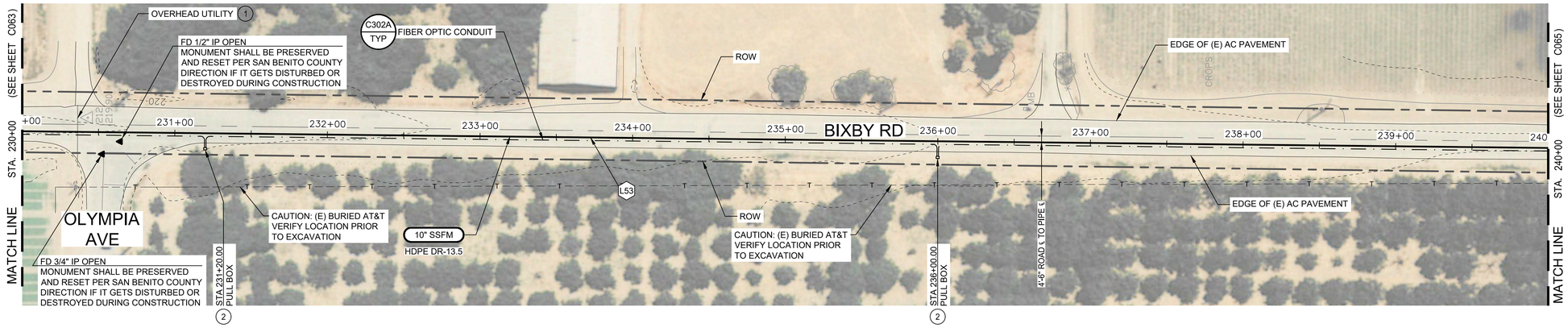

PLAN VIEW LEGEND

- EXISTING PIPE — 8" SS
- NEW PIPE — 10" SSFM
- FIBER OPTIC CONDUIT
- FIBER OPTIC PULL BOX

1"=40'H (0, 40', 60', 80')

GENERAL NOTES

1. SEE DWG C081 FOR NEW SSFM ALIGNMENT CURVE AND LINE TABLES.
2. ALL WORK MUST BE COMPLETED WITHIN THE ROW, OUTSIDE OF DRAINAGE DITCHES. NO WORK OR ACCESS IS ALLOWED IN THE DRAINAGE DITCHES.
3. PROVIDE STAKES FOR THE 10" HDPE SSFM AT 250 FT INTERVALS AND AT ALL CHANGES IN ALIGNMENT, END OF PIPE AND BURIED VALVES. STAKES MAY BE OFFSET TO AVOID DRIVE AREAS (IN THE SHOULDER) AS APPROVED BY THE ENGINEER.
4. SEE DWG C003 FOR AC OVERLAY, PAVING, PIPE TRENCH DETAILS, AND CONDUIT TRENCH DETAILS.

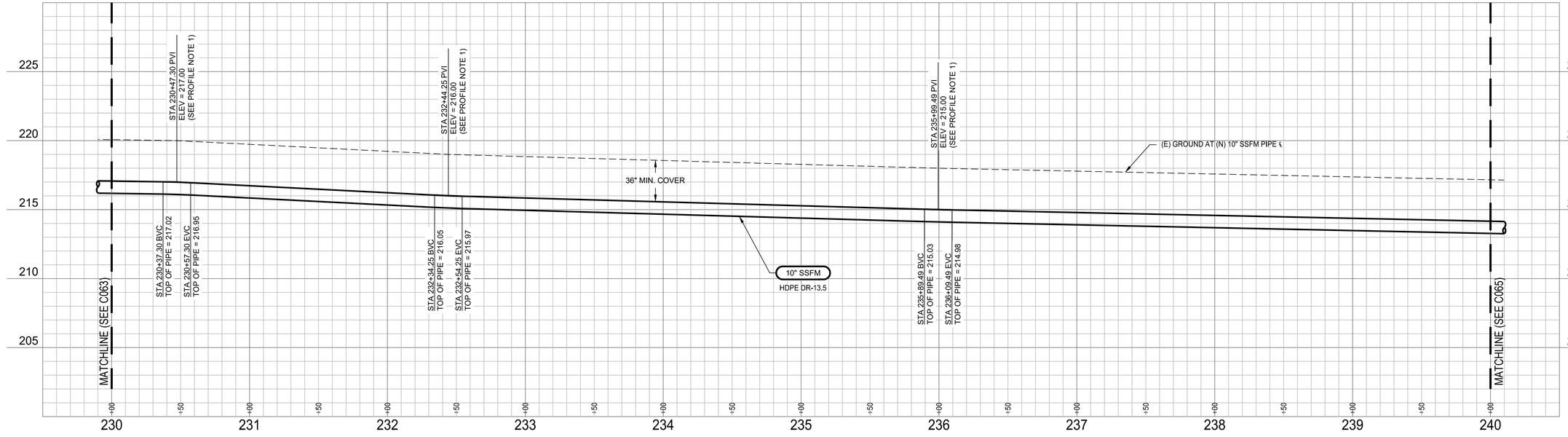

PROFILE NOTES

1. VERTICAL CURVES ARE WITHIN MANUFACTURER'S ALOWABLE PIPE DEFLECTION RADIUS (MINIMUM 62.7').
2. FIBER CONDUIT AND PULL BOXES NOT SHOWN. SEE PLAN VIEW AND SPECIFICATIONS. FOR UTILITY ELEVATION CONFLICTS, ADJUST IN THE FIELD AS APPROVED BY THE ENGINEER.

PROFILE LEGEND

- SANITARY SEWER PIPE
- HORIZONTAL BEND

1"=40'H (0, 40', 60', 80') 1"=4'V (0, 4, 6, 8)

Revision	By	Appd.	YY.MM.DD
BID SET	KM	GIA	2022.12.30
PERMIT SET	KM	GIA	2022.10.10
Issued	By	Appd	YYYY.MM.DD

Permit/Seal

REGISTERED PROFESSIONAL ENGINEER GABRIEL I. ARONOW No.55807 Exp.12/31/24 STATE OF CALIFORNIA CIVIL

12/30/2022

Consultant

Stantec

Stantec Consulting Services Inc.
3875 Atherton Road
Rocklin CA 95765-3716
Tel: (916) 773-8100
www.stantec.com

Copyright Reserved

The Contractor shall verify and be responsible for all dimensions. DO NOT scale the drawing - any errors or omissions shall be reported to Stantec without delay. The Copyrights to all designs and drawings are the property of Stantec. Reproduction or use for any purpose other than that authorized by Stantec is forbidden.

Client/Project Logo

Client/Project

City of San Juan Bautista

SANITARY SEWER FORCE MAIN TO HOLLISTER PROJECT

San Juan Bautista, California

File Name: 31441-C061-C070 | AV Dwn. | KM, AV Dsgn. | GIA Chkd. | 2022.12.30 YYYY.MM.DD

Title

PLAN AND PROFILE
BIXBY RD
STA. 230+00 TO 240+00

Project No. 184031441 | Scale AS SHOWN

Revision 0 | Sheet 55 of 128 | Drawing No. C064

ORIGINAL SHEET - ANSI D

\\<LMR>\active\184031441\project\civil\31441-C061-C070 2022.03.17 2:28:36 AM

UNDERGROUND SERVICE ALERT

CALL: 811

TWO WORKING DAYS BEFORE YOU DIG

*** CAUTION ***

BURIED AND OVERHEAD UTILITIES

CONTRACTOR TO COORDINATE WORK WITH PG&E, AT&T, SBCWD, CITY OF SAN JUAN BAUTISTA, CITY OF HOLLISTER AND ANY OTHER UTILITY COMPANIES OBSERVED ADJACENT TO THE PROJECT PRIOR TO WORKING IN THE AREA OF THEIR UTILITIES

CONSTRUCTION NOTES

1. CAUTION: OVERHEAD ELECTRIC AND/OR COMMUNICATION UTILITY CROSSING.
2. PLACE PULL BOXES AND BOV VALVE BOX IN THE SHOULDER, 3' OFF THE AC PAVEMENT, UNO.
3. BUTT FUSION ELBOWS SHALL BE RADIUS ELBOWS (NOT MITERED ELBOWS).

N

1"=40'H 0 40' 60' 80'

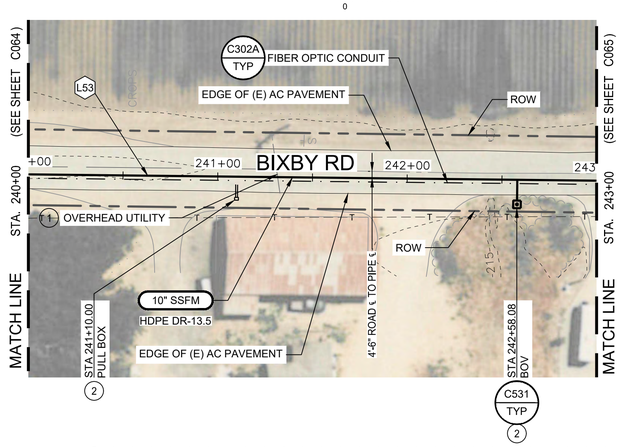

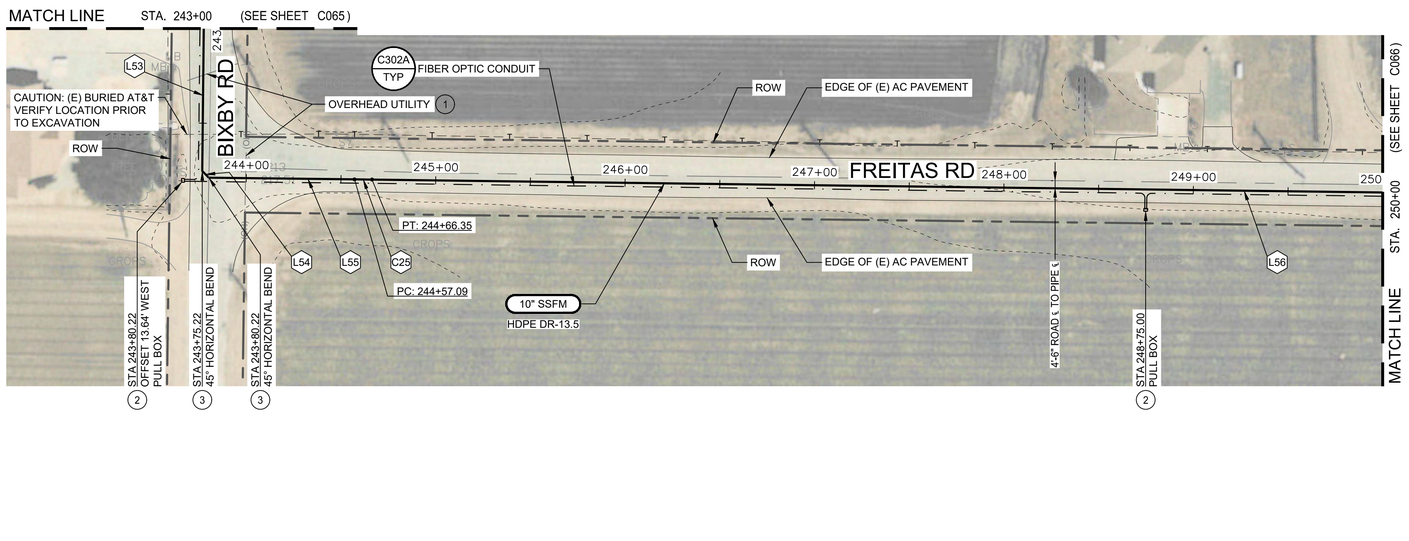

PLAN VIEW LEGEND

EXISTING PIPE	8" SS
NEW PIPE	10" SSFM
FIBER OPTIC CONDUIT	
FIBER OPTIC PULL BOX	

GENERAL NOTES

1. SEE DWG C081 FOR NEW SSFM ALIGNMENT CURVE AND LINE TABLES.
2. ALL WORK MUST BE COMPLETED WITHIN THE ROW, OUTSIDE OF DRAINAGE DITCHES. NO WORK OR ACCESS IS ALLOWED IN THE DRAINAGE DITCHES.
3. PROVIDE STAKES FOR THE 10" HDPE SSFM AT 250 FT INTERVALS AND AT ALL CHANGES IN ALIGNMENT, END OF PIPE AND BURIED VALVES. STAKES MAY BE OFFSET TO AVOID DRIVE AREAS (IN THE SHOULDER) AS APPROVED BY THE ENGINEER.
4. SEE DWG C003 FOR AC OVERLAY, PAVING, PIPE TRENCH DETAILS, AND CONDUIT TRENCH DETAILS.

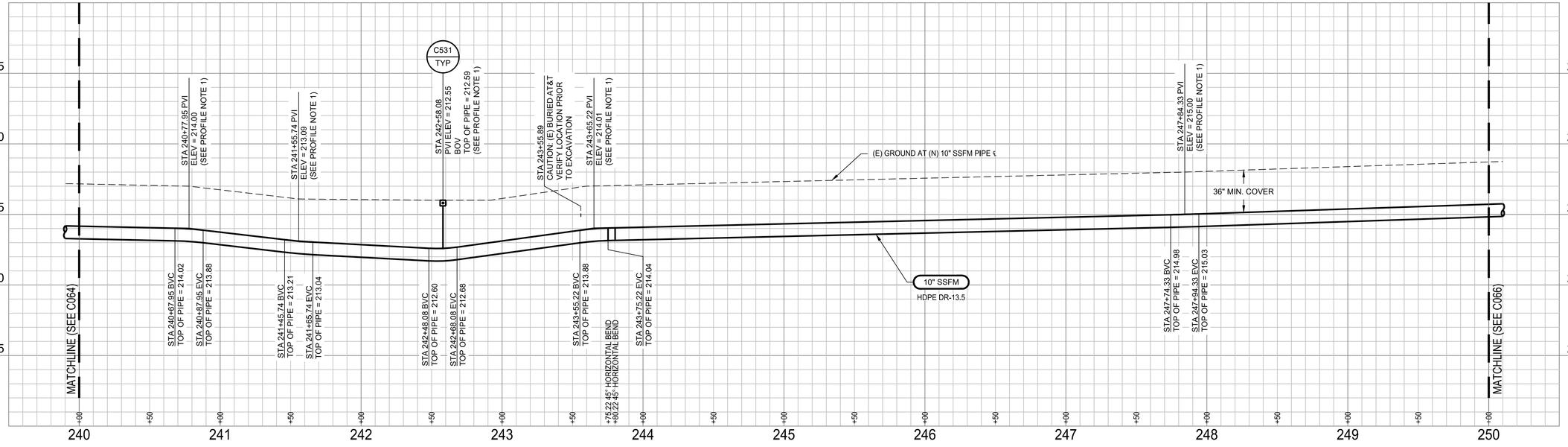

PROFILE NOTES

1. VERTICAL CURVES ARE WITHIN MANUFACTURER'S ALOWABLE PIPE DEFLECTION RADIUS (MINIMUM 62.7').
2. FIBER CONDUIT AND PULL BOXES NOT SHOWN. SEE PLAN VIEW AND SPECIFICATIONS. FOR UTILITY ELEVATION CONFLICTS, ADJUST IN THE FIELD AS APPROVED BY THE ENGINEER.

PROFILE LEGEND

SANITARY SEWER PIPE

HORIZONTAL BEND

1"=40'H 0 40' 60' 80'
1"=4'V 0 4 6 8

Revision	By	Appd.	YY.MM.DD
BID SET	KM	GIA	2022.12.30
PERMIT SET	KM	GIA	2022.10.10
Issued	By	Appd	YYYY.MM.DD

Permit/Seal

REGISTERED PROFESSIONAL ENGINEER GABRIEL I. ARONOW No.55607 Exp.12/31/24 CIVIL STATE OF CALIFORNIA

12/30/2022

Consultant

Stantec

Stantec Consulting Services Inc.
3875 Atherton Road
Rocklin CA 95765-3716
Tel: (916) 773-8100
www.stantec.com

Copyright Reserved
The Contractor shall verify and be responsible for all dimensions. DO NOT scale the drawing - any errors or omissions shall be reported to Stantec without delay. The Copyrights to all designs and drawings are the property of Stantec. Reproduction or use for any purpose other than that authorized by Stantec is forbidden.

Client/Project Logo

Client/Project

City of San Juan Bautista

SANITARY SEWER FORCE MAIN TO HOLLISTER PROJECT

San Juan Bautista, California

File Name: 31441-C061-C070	AV	KM, AV	GIA	2022.12.30
	Dwn.	Dsgn.	Chkd.	YYYY.MM.DD

Title

PLAN AND PROFILE
BIXBY RD AND FREITAS RD
STA. 240+00 TO 250+00

Project No.	Scale
184031441	AS SHOWN
Revision	Sheet
0	56 of 128

Drawing No.

C065

ORIGINAL SHEET - ANSI D

\\<\LMR\Jobs\184031441\Drawing\civil\31441-C061-C070 2023.01.12 8:30:23 AM

UNDERGROUND SERVICE ALERT

CALL: 811

TWO WORKING DAYS BEFORE YOU DIG

*** CAUTION ***

BURIED AND OVERHEAD UTILITIES

CONTRACTOR TO COORDINATE WORK WITH PG&E, AT&T, SBCWD, CITY OF SAN JUAN BAUTISTA, CITY OF HOLLISTER AND ANY OTHER UTILITY COMPANIES OBSERVED ADJACENT TO THE PROJECT PRIOR TO WORKING IN THE AREA OF THEIR UTILITIES

CONSTRUCTION NOTES

1. CAUTION: OVERHEAD ELECTRIC AND/OR COMMUNICATION UTILITY CROSSING.
2. PLACE PULL BOXES IN THE SHOULDER, 3' OFF THE AC PAVEMENT, UNO.

N

1"=40'H 0 40' 60' 80'

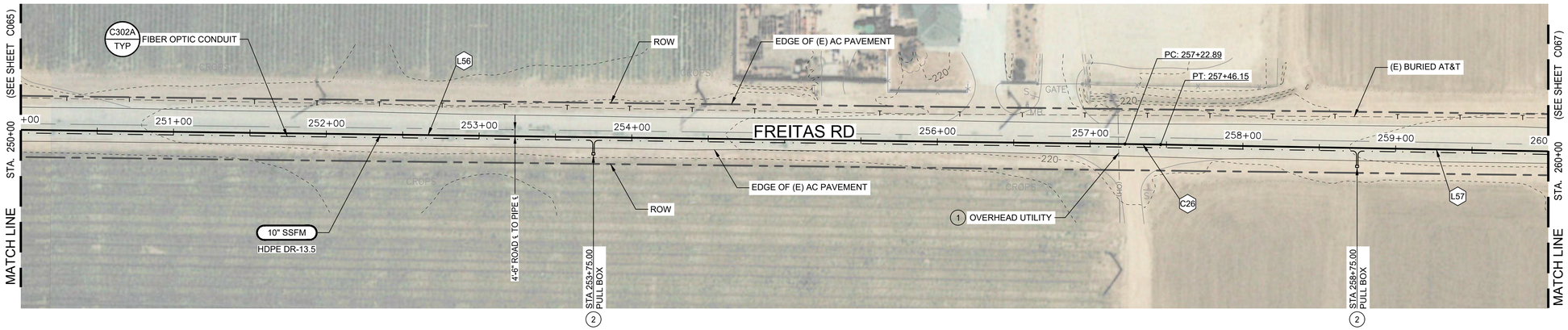

PLAN VIEW LEGEND

- EXISTING PIPE — 8" SS
- NEW PIPE — 10" SSFM
- FIBER OPTIC CONDUIT
- FIBER OPTIC PULL BOX

GENERAL NOTES

1. SEE DWG C081 FOR NEW SSFM ALIGNMENT CURVE AND LINE TABLES.
2. ALL WORK MUST BE COMPLETED WITHIN THE ROW, OUTSIDE OF DRAINAGE DITCHES. NO WORK OR ACCESS IS ALLOWED IN THE DRAINAGE DITCHES.
3. PROVIDE STAKES FOR THE 10" HDPE SSFM AT 250 FT INTERVALS AND AT ALL CHANGES IN ALIGNMENT, END OF PIPE AND BURIED VALVES. STAKES MAY BE OFFSET TO AVOID DRIVE AREAS (IN THE SHOULDER) AS APPROVED BY THE ENGINEER.
4. SEE DWG C003 FOR AC OVERLAY, PAVING, PIPE TRENCH DETAILS, AND CONDUIT TRENCH DETAILS.

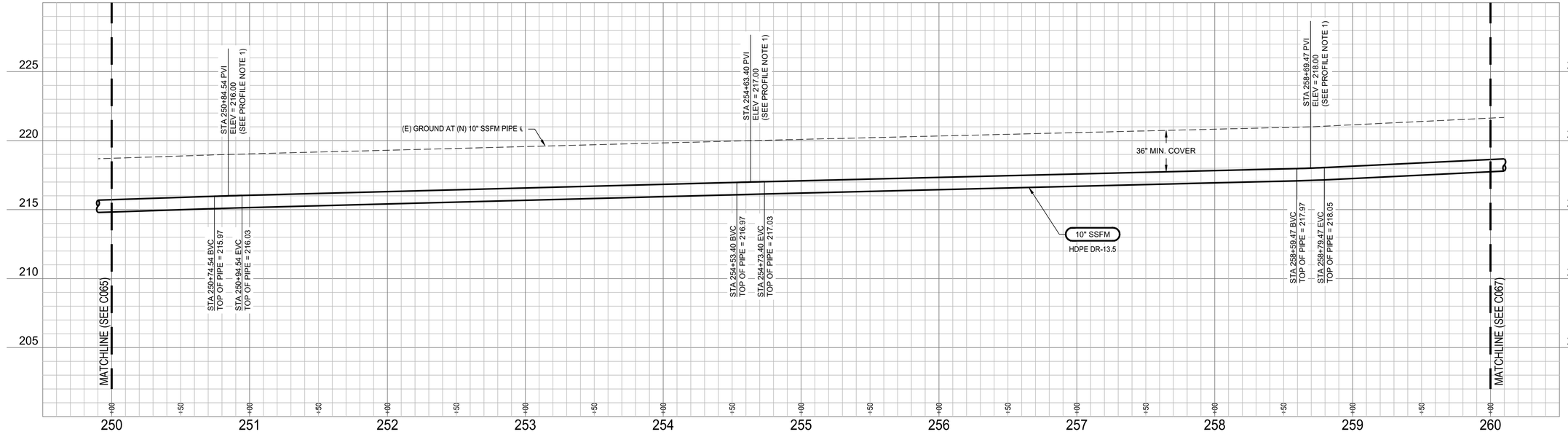

PROFILE NOTES

1. VERTICAL CURVES ARE WITHIN MANUFACTURER'S ALOWABLE PIPE DEFLECTION RADIUS (MINIMUM 62.7').
2. FIBER CONDUIT AND PULL BOXES NOT SHOWN. SEE PLAN VIEW AND SPECIFICATIONS. FOR UTILITY ELEVATION CONFLICTS, ADJUST IN THE FIELD AS APPROVED BY THE ENGINEER.

PROFILE LEGEND

- SANITARY SEWER PIPE
- HORIZONTAL BEND

1"=40'H 0 40' 60' 80'
1"=4'V 0 4 6 8

Revision	By	Appd.	YY.MM.DD
BID SET	KM	GIA	2022.12.30
PERMIT SET	KM	GIA	2022.10.10
Issued	By	Appd	YYYY.MM.DD

Permit/Seal

REGISTERED PROFESSIONAL ENGINEER — GABRIEL I. ARONOW — No.55607 — Exp.12/31/24 — STATE OF CALIFORNIA — CIVIL

12/30/2022

Consultant

Stantec

Stantec Consulting Services Inc.
3875 Atherton Road
Rocklin CA 95765-3716
Tel: (916) 773-8100
www.stantec.com

Copyright Reserved

The Contractor shall verify and be responsible for all dimensions. DO NOT scale the drawing - any errors or omissions shall be reported to Stantec without delay. The Copyrights to all designs and drawings are the property of Stantec. Reproduction or use for any purpose other than that authorized by Stantec is forbidden.

Client/Project Logo

Client/Project

City of San Juan Bautista

SANITARY SEWER FORCE MAIN TO HOLLISTER PROJECT

San Juan Bautista, California

File Name: 31441-C061-C070	KM, AV	KM	GIA	2022.12.30
	Dwn.	Dsgn.	Chkd.	YYYY.MM.DD

Title

PLAN AND PROFILE
FREITAS RD
STA. 250+00 TO 260+00

Project No.	Scale
184031441	AS SHOWN
Revision	Sheet / Drawing No.
0	57 of 128 — C066

\\<LMDomain>\projects\184031441\project files\drawings\civil\31441-C061-C070 2020.01 (7.2.0.2).dwg
ORIGINAL SHEET - ANSI D

UNDERGROUND SERVICE ALERT

CALL: 811

TWO WORKING DAYS BEFORE YOU DIG

*** CAUTION ***

BURIED AND OVERHEAD UTILITIES

CONTRACTOR TO COORDINATE WORK WITH PG&E, AT&T, SBCWD, CITY OF SAN JUAN BAUTISTA, CITY OF HOLLISTER AND ANY OTHER UTILITY COMPANIES OBSERVED ADJACENT TO THE PROJECT PRIOR TO WORKING IN THE AREA OF THEIR UTILITIES

CONSTRUCTION NOTES

1. CAUTION: OVERHEAD ELECTRIC AND/OR COMMUNICATION UTILITY CROSSING.
2. PLACE PULL BOXES IN THE SHOULDER, 3' OFF THE AC PAVEMENT, UNO.

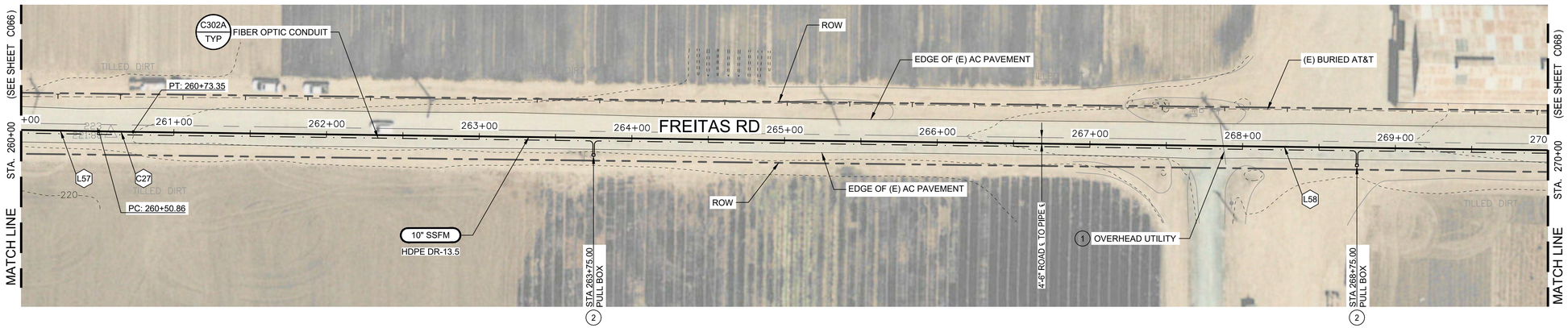

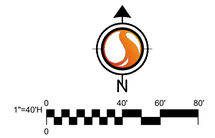

PLAN VIEW LEGEND

- EXISTING PIPE — 8" SS
- NEW PIPE — 10" SSFM
- FIBER OPTIC CONDUIT
- FIBER OPTIC PULL BOX

GENERAL NOTES

1. SEE DWG C081 FOR NEW SSFM ALIGNMENT CURVE AND LINE TABLES.
2. ALL WORK MUST BE COMPLETED WITHIN THE ROW, OUTSIDE OF DRAINAGE DITCHES. NO WORK OR ACCESS IS ALLOWED IN THE DRAINAGE DITCHES.
3. PROVIDE STAKES FOR THE 10" HDPE SSFM AT 250 FT INTERVALS AND AT ALL CHANGES IN ALIGNMENT, END OF PIPE AND BURIED VALVES. STAKES MAY BE OFFSET TO AVOID DRIVE AREAS (IN THE SHOULDER) AS APPROVED BY THE ENGINEER.
4. SEE DWG C003 FOR AC OVERLAY, PAVING, PIPE TRENCH DETAILS, AND CONDUIT TRENCH DETAILS.

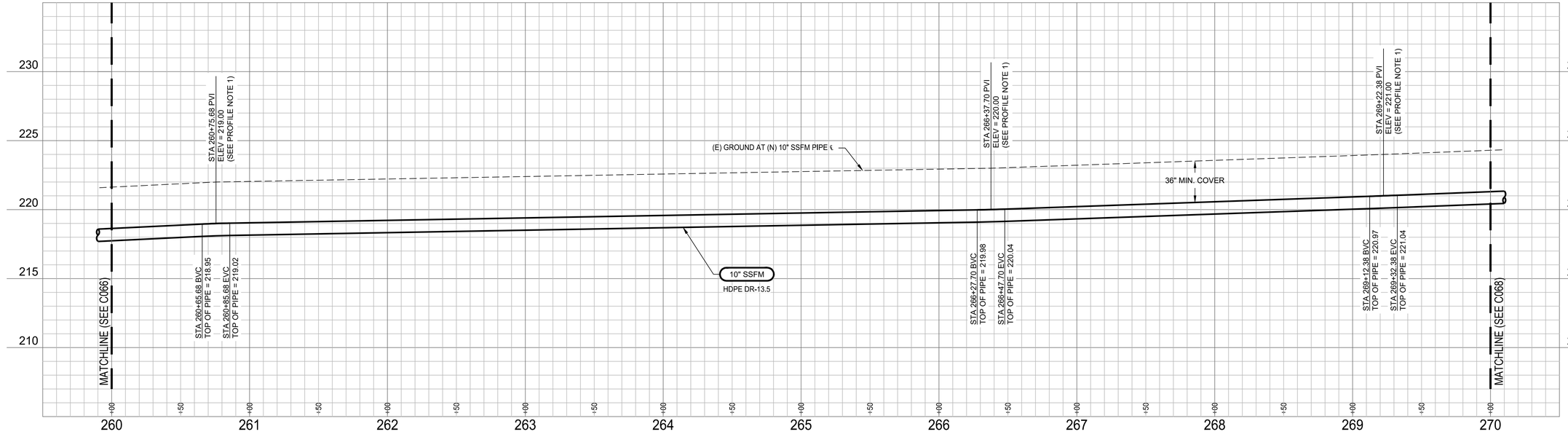

PROFILE NOTES

1. VERTICAL CURVES ARE WITHIN MANUFACTURER'S ALOWABLE PIPE DEFLECTION RADIUS (MINIMUM 62.7').
2. FIBER CONDUIT AND PULL BOXES NOT SHOWN. SEE PLAN VIEW AND SPECIFICATIONS. FOR UTILITY ELEVATION CONFLICTS, ADJUST IN THE FIELD AS APPROVED BY THE ENGINEER.

PROFILE LEGEND

- SANITARY SEWER PIPE
- HORIZONTAL BEND

1"=40'H 0 40' 60' 80'
1"=4'V 0 4 6 8

Revision	By	Appd.	YY.MM.DD
BID SET	KM	GIA	2022.12.30
PERMIT SET	KM	GIA	2022.10.10
Issued	By	Appd	YYYY.MM.DD

Permit/Seal

REGISTERED PROFESSIONAL ENGINEER — GABRIEL I. ARONOW — No.55607 — Exp.12/31/24 — CIVIL — STATE OF CALIFORNIA

12/30/2022

Consultant

Stantec

Stantec Consulting Services Inc.
3875 Atherton Road
Rocklin CA 95765-3716
Tel: (916) 773-8100
www.stantec.com

Copyright Reserved

The Contractor shall verify and be responsible for all dimensions. DO NOT scale the drawing - any errors or omissions shall be reported to Stantec without delay. The Copyrights to all designs and drawings are the property of Stantec. Reproduction or use for any purpose other than that authorized by Stantec is forbidden.

Client/Project Logo

Client/Project

City of San Juan Bautista

SANITARY SEWER FORCE MAIN TO HOLLISTER PROJECT

San Juan Bautista, California

File Name: 31441-C061-C070 | AV Dwn. | KM, AV Dsgn. | GIA Chkd. | 2022.12.30 YYYY.MM.DD

Title

PLAN AND PROFILE
FREITAS RD
STA. 260+00 TO 270+00

Project No. 184031441

Scale AS SHOWN

Revision 0

Sheet 58 of 128

Drawing No. C067

\\<LMDLocPath>\184031441\Drawing\civil\31441-C061-C070 2023.01.17 8:33:43 AM

ORIGINAL SHEET - ANSI D

UNDERGROUND SERVICE ALERT

CALL: 811

TWO WORKING DAYS BEFORE YOU DIG

*** CAUTION ***

BURIED AND OVERHEAD UTILITIES

CONTRACTOR TO COORDINATE WORK WITH PG&E, AT&T, SBCWD, CITY OF SAN JUAN BAUTISTA, CITY OF HOLLISTER AND ANY OTHER UTILITY COMPANIES OBSERVED ADJACENT TO THE PROJECT PRIOR TO WORKING IN THE AREA OF THEIR UTILITIES

CONSTRUCTION NOTES

1. CAUTION: OVERHEAD ELECTRIC AND/OR COMMUNICATION UTILITY CROSSING.
2. PLACE PULL BOXES IN THE SHOULDER, 3' OFF THE AC PAVEMENT, UNO.

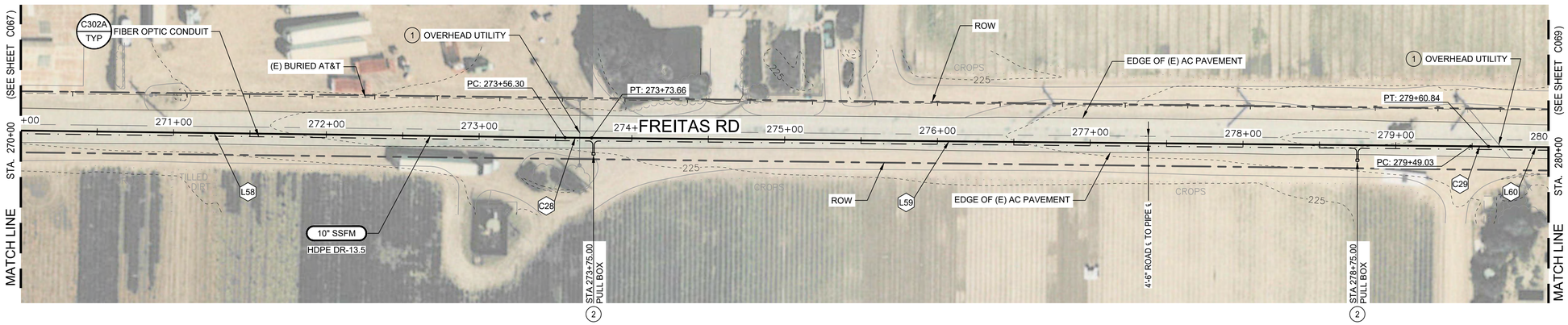

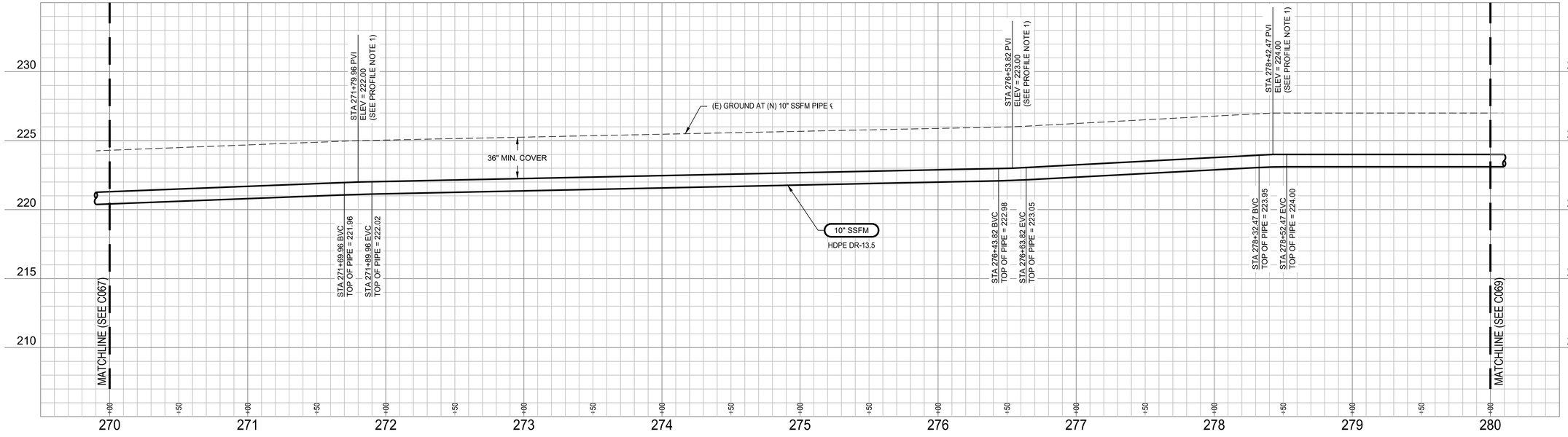

PLAN VIEW LEGEND

- EXISTING PIPE — 8" SS
- NEW PIPE — 10" SSFM
- FIBER OPTIC CONDUIT
- FIBER OPTIC PULL BOX

GENERAL NOTES

1. SEE DWG C081 FOR NEW SSFM ALIGNMENT CURVE AND LINE TABLES.
2. ALL WORK MUST BE COMPLETED WITHIN THE ROW, OUTSIDE OF DRAINAGE DITCHES. NO WORK OR ACCESS IS ALLOWED IN THE DRAINAGE DITCHES.
3. PROVIDE STAKES FOR THE 10" HDPE SSFM AT 250 FT INTERVALS AND AT ALL CHANGES IN ALIGNMENT, END OF PIPE AND BURIED VALVES. STAKES MAY BE OFFSET TO AVOID DRIVE AREAS (IN THE SHOULDER) AS APPROVED BY THE ENGINEER.
4. SEE DWG C003 FOR AC OVERLAY, PAVING, PIPE TRENCH DETAILS, AND CONDUIT TRENCH DETAILS.

PROFILE NOTES

1. VERTICAL CURVES ARE WITHIN MANUFACTURER'S ALOWABLE PIPE DEFLECTION RADIUS (MINIMUM 62.7').
2. FIBER CONDUIT AND PULL BOXES NOT SHOWN. SEE PLAN VIEW AND SPECIFICATIONS. FOR UTILITY ELEVATION CONFLICTS, ADJUST IN THE FIELD AS APPROVED BY THE ENGINEER.

PROFILE LEGEND

- SANITARY SEWER PIPE
- HORIZONTAL BEND

1"=40'H, 1"=4'V

Revision	By	Appd.	YY.MM.DD
BID SET	KM	GIA	2022.12.30
PERMIT SET	KM	GIA	2022.10.10
Issued	By	Appd	YYYY.MM.DD

Permit/Seal

REGISTERED PROFESSIONAL ENGINEER — GABRIEL I. ARONOW — No.55807 — Exp.12/31/24 — STATE OF CALIFORNIA — CIVIL

12/30/2022

Consultant

Stantec

Stantec Consulting Services Inc.
3875 Atherton Road
Rocklin CA 95765-3716
Tel: (916) 773-8100
www.stantec.com

Copyright Reserved

The Contractor shall verify and be responsible for all dimensions. DO NOT scale the drawing - any errors or omissions shall be reported to Stantec without delay. The Copyrights to all designs and drawings are the property of Stantec. Reproduction or use for any purpose other than that authorized by Stantec is forbidden.

Client/Project Logo

Client/Project

City of San Juan Bautista

SANITARY SEWER FORCE MAIN TO HOLLISTER PROJECT

San Juan Bautista, California

File Name: 31441-C061-C070 | AV Dwn. | KM, AV Dsgn. | GIA Chkd. | 2022.12.30 YYYY.MM.DD

Title

PLAN AND PROFILE
FREITAS RD
STA. 270+00 TO 280+00

Project No. 184031441

Scale AS SHOWN

Revision 0

Sheet 59 of 128

Drawing No. C068

ORIGINAL SHEET - ANSI D

\\<LMDrive>\Projects\184031441\Drawings\civil\31441-C061-C070 2023.01.17 2:35:27 AM

UNDERGROUND SERVICE ALERT

CALL: 811

TWO WORKING DAYS BEFORE YOU DIG

*** CAUTION ***

BURIED AND OVERHEAD UTILITIES

CONTRACTOR TO COORDINATE WORK WITH PG&E, AT&T, SBCWD, CITY OF SAN JUAN BAUTISTA, CITY OF HOLLISTER AND ANY OTHER UTILITY COMPANIES OBSERVED ADJACENT TO THE PROJECT PRIOR TO WORKING IN THE AREA OF THEIR UTILITIES

CONSTRUCTION NOTES

1. CAUTION: OVERHEAD ELECTRIC AND/OR COMMUNICATION UTILITY CROSSING.
2. PLACE PULL BOXES IN THE SHOULDER, 3' OFF THE AC PAVEMENT, UNO.

N

1"=40'H 0 40' 60' 80'

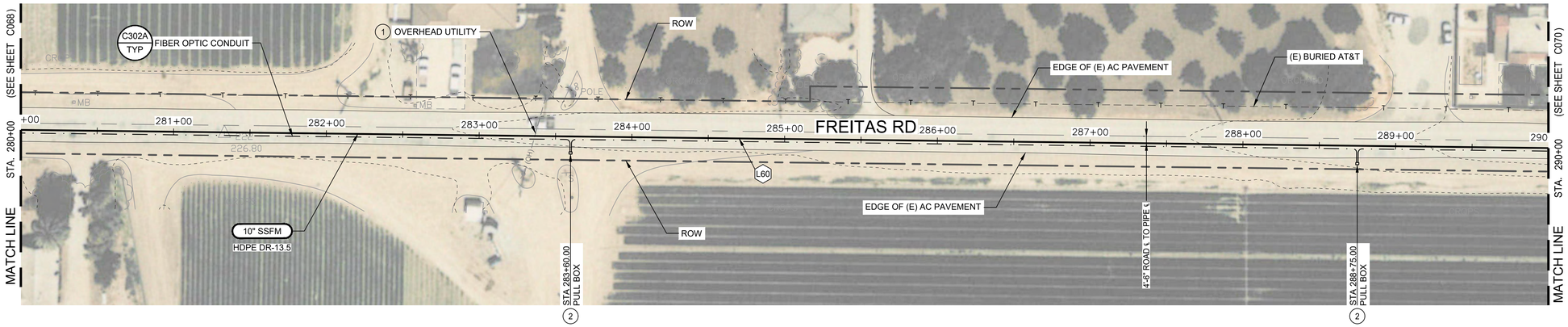

PLAN VIEW LEGEND

- EXISTING PIPE — 8" SS
- NEW PIPE — 10" SSFM
- FIBER OPTIC CONDUIT
- FIBER OPTIC PULL BOX

GENERAL NOTES

1. SEE DWG C081 FOR NEW SSFM ALIGNMENT CURVE AND LINE TABLES.
2. ALL WORK MUST BE COMPLETED WITHIN THE ROW, OUTSIDE OF DRAINAGE DITCHES. NO WORK OR ACCESS IS ALLOWED IN THE DRAINAGE DITCHES.
3. PROVIDE STAKES FOR THE 10" HDPE SSFM AT 250 FT INTERVALS AND AT ALL CHANGES IN ALIGNMENT, END OF PIPE AND BURIED VALVES. STAKES MAY BE OFFSET TO AVOID DRIVE AREAS (IN THE SHOULDER) AS APPROVED BY THE ENGINEER.
4. SEE DWG C003 FOR AC OVERLAY, PAVING, PIPE TRENCH DETAILS, AND CONDUIT TRENCH DETAILS.

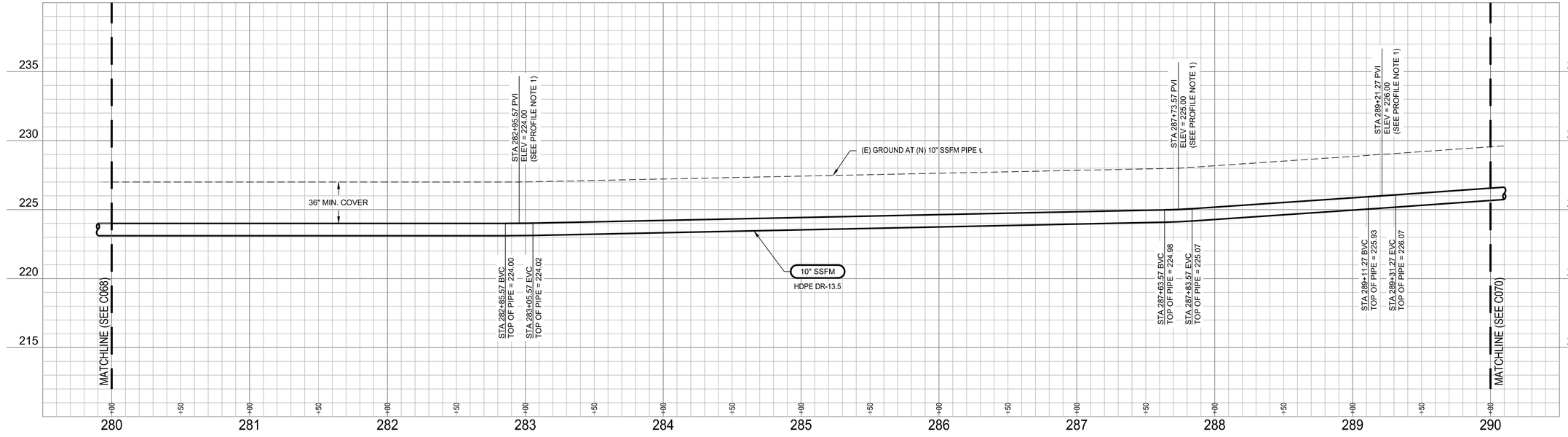

PROFILE NOTES

1. VERTICAL CURVES ARE WITHIN MANUFACTURER'S ALOWABLE PIPE DEFLECTION RADIUS (MINIMUM 62.7').
2. FIBER CONDUIT AND PULL BOXES NOT SHOWN. SEE PLAN VIEW AND SPECIFICATIONS. FOR UTILITY ELEVATION CONFLICTS, ADJUST IN THE FIELD AS APPROVED BY THE ENGINEER.

PROFILE LEGEND

- SANITARY SEWER PIPE
- HORIZONTAL BEND

1"=40'H 0 40' 60' 80'
1"=4'V 0 4 6 8

Revision	By	Appd.	YY.MM.DD
BID SET	KM	GIA	2022.12.30
PERMIT SET	KM	GIA	2022.10.10
Issued	By	Appd	YYYY.MM.DD

Permit/Seal

REGISTERED PROFESSIONAL ENGINEER — GABRIEL I. ARONOW — No.55807 — Exp.12/31/24 — CIVIL — STATE OF CALIFORNIA

12/30/2022

Consultant

Stantec

Stantec Consulting Services Inc.
3875 Atherton Road
Rocklin CA 95765-3716
Tel: (916) 773-8100
www.stantec.com

Copyright Reserved

The Contractor shall verify and be responsible for all dimensions. DO NOT scale the drawing - any errors or omissions shall be reported to Stantec without delay. The Copyrights to all designs and drawings are the property of Stantec. Reproduction or use for any purpose other than that authorized by Stantec is forbidden.

Client/Project Logo

Client/Project

City of San Juan Bautista

SANITARY SEWER FORCE MAIN TO HOLLISTER PROJECT

San Juan Bautista, California

File Name: 31441-C061-C070 | AV Dwn. | KM, AV Dsgn. | GIA Chkd. | 2022.12.30 YYYY.MM.DD

Title

PLAN AND PROFILE
FREITAS RD
STA. 280+00 TO 290+00

Project No. 184031441

Scale AS SHOWN

Revision 0 | Sheet 60 of 128

Drawing No. C069

ORIGINAL SHEET - ANSI D

\\<LMR_path>\<LMR>\31441\Gdrawing\civil\31441-C061-C070 2023.03.17 2:48:29 AM

UNDERGROUND SERVICE ALERT

CALL: 811

TWO WORKING DAYS BEFORE YOU DIG

*** CAUTION ***

BURIED AND OVERHEAD UTILITIES

CONTRACTOR TO COORDINATE WORK WITH PG&E, AT&T, SBCWD, CITY OF SAN JUAN BAUTISTA, CITY OF HOLLISTER AND ANY OTHER UTILITY COMPANIES OBSERVED ADJACENT TO THE PROJECT PRIOR TO WORKING IN THE AREA OF THEIR UTILITIES

CONSTRUCTION NOTES

1. CAUTION: OVERHEAD ELECTRIC AND/OR COMMUNICATION UTILITY CROSSING.
2. PLACE PULL BOXES AND BOV VALVE BOX IN THE SHOULDER, 3' OFF THE AC PAVEMENT, UNO.
3. INSTALL REMOTE PIGGING STATION 2 AS DETAILED ON SHEET C025.
4. PLACE SCAV VALVE BOX IN THE SHOULDER, 3' OFF THE AC PAVEMENT, AND MAINTAIN 10' SEPARATION FROM EXISTING OVERHEAD UTILITY POLE.

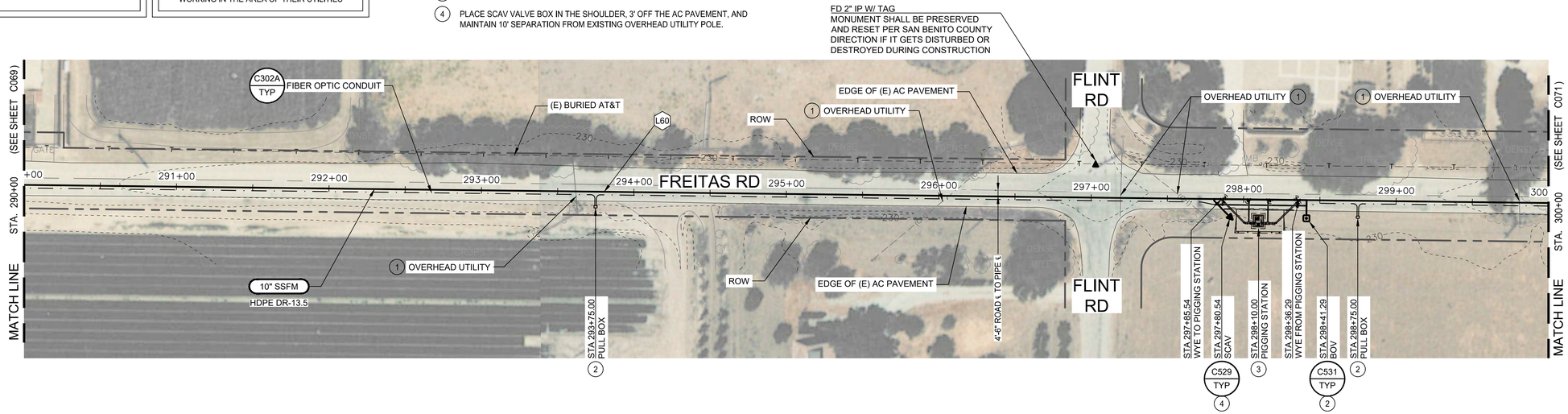

N

1"=40'H
0 40' 60' 80'

PLAN VIEW LEGEND

- EXISTING PIPE — 8" SS
- NEW PIPE — 10" SSFM
- FIBER OPTIC CONDUIT
- FIBER OPTIC PULL BOX

GENERAL NOTES

1. SEE DWG C081 FOR NEW SSFM ALIGNMENT CURVE AND LINE TABLES.
2. ALL WORK MUST BE COMPLETED WITHIN THE ROW, OUTSIDE OF DRAINAGE DITCHES. NO WORK OR ACCESS IS ALLOWED IN THE DRAINAGE DITCHES.
3. PROVIDE STAKES FOR THE 10" HDPE SSFM AT 250 FT INTERVALS AND AT ALL CHANGES IN ALIGNMENT, END OF PIPE AND BURIED VALVES. STAKES MAY BE OFFSET TO AVOID DRIVE AREAS (IN THE SHOULDER) AS APPROVED BY THE ENGINEER.
4. SEE DWG C003 FOR AC OVERLAY, PAVING, PIPE TRENCH DETAILS, AND CONDUIT TRENCH DETAILS.

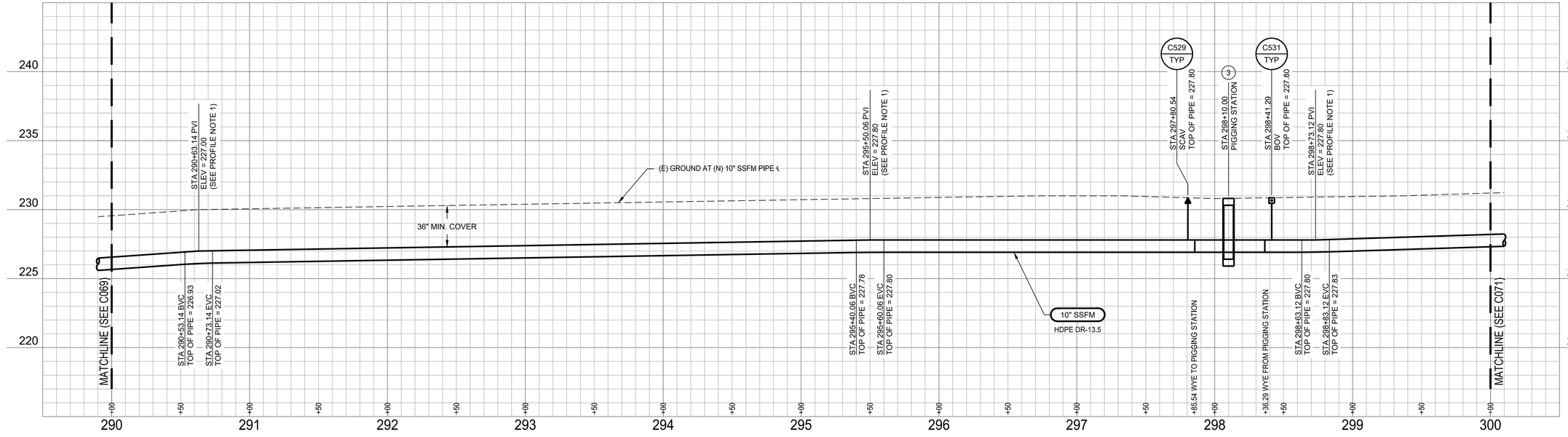

PROFILE NOTES

1. VERTICAL CURVES ARE WITHIN MANUFACTURER'S ALOWABLE PIPE DEFLECTION RADIUS (MINIMUM 62.7').
2. FIBER CONDUIT AND PULL BOXES NOT SHOWN. SEE PLAN VIEW AND SPECIFICATIONS. FOR UTILITY ELEVATION CONFLICTS, ADJUST IN THE FIELD AS APPROVED BY THE ENGINEER.

PROFILE LEGEND

- SANITARY SEWER PIPE
- HORIZONTAL BEND

1"=40'H 0 40' 60' 80'
1"=4'V 0 4 6 8

Revision	By	Appd.	YY.MM.DD
BID SET	KM	GIA	2022.12.30
PERMIT SET	KM	GIA	2022.10.10
Issued	By	Appd	YYYY.MM.DD

Permit/Seal

REGISTERED PROFESSIONAL ENGINEER GABRIEL I. ARONOW No.55607 Exp.12/31/24 CIVIL STATE OF CALIFORNIA

12/30/2022

Consultant

Stantec

Stantec Consulting Services Inc.
3875 Atherton Road
Rocklin CA 95765-3716
Tel: (916) 773-8100
www.stantec.com

Copyright Reserved

The Contractor shall verify and be responsible for all dimensions. DO NOT scale the drawing - any errors or omissions shall be reported to Stantec without delay. The Copyrights to all designs and drawings are the property of Stantec. Reproduction or use for any purpose other than that authorized by Stantec is forbidden.

Client/Project Logo

Client/Project

City of San Juan Bautista

SANITARY SEWER FORCE MAIN TO HOLLISTER PROJECT

San Juan Bautista, California

File Name: 31441-C061-C070 | AV Dwn. | KM, AV Dsgn. | GIA Chkd. | 2022.12.30 YYYY.MM.DD

Title

PLAN AND PROFILE
FREITAS RD
STA. 290+00 TO 300+00

Project No. 184031441

Scale AS SHOWN

Revision 0 | Sheet 61 of 128

Drawing No. C070

ORIGINAL SHEET - ANSI D

\\<\LMR\Jobs\184031441\Drawing\civil\31441-C061-C070 2023.01.12 8:41:57 AM

UNDERGROUND SERVICE ALERT

CALL: 811

TWO WORKING DAYS BEFORE YOU DIG

*** CAUTION ***

BURIED AND OVERHEAD UTILITIES

CONTRACTOR TO COORDINATE WORK WITH PG&E, AT&T, SBCWD, CITY OF SAN JUAN BAUTISTA, CITY OF HOLLISTER AND ANY OTHER UTILITY COMPANIES OBSERVED ADJACENT TO THE PROJECT PRIOR TO WORKING IN THE AREA OF THEIR UTILITIES

CONSTRUCTION NOTES

1. CAUTION: OVERHEAD ELECTRIC AND/OR COMMUNICATION UTILITY CROSSING.
2. PLACE PULL BOXES IN THE SHOULDER, 3' OFF THE AC PAVEMENT, UNO.

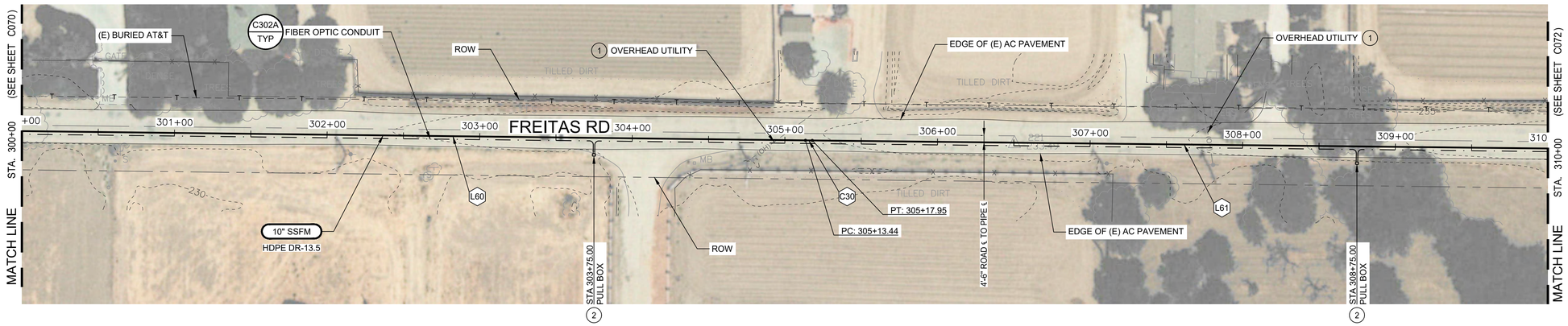

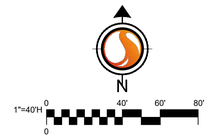

PLAN VIEW LEGEND

- EXISTING PIPE — 8" SS
- NEW PIPE — 10" SSFM
- FIBER OPTIC CONDUIT
- FIBER OPTIC PULL BOX

GENERAL NOTES

1. SEE DWG C081 FOR NEW SSFM ALIGNMENT CURVE AND LINE TABLES.
2. ALL WORK MUST BE COMPLETED WITHIN THE ROW, OUTSIDE OF DRAINAGE DITCHES. NO WORK OR ACCESS IS ALLOWED IN THE DRAINAGE DITCHES.
3. PROVIDE STAKES FOR THE 10" HDPE SSFM AT 250 FT INTERVALS AND AT ALL CHANGES IN ALIGNMENT, END OF PIPE AND BURIED VALVES. STAKES MAY BE OFFSET TO AVOID DRIVE AREAS (IN THE SHOULDER) AS APPROVED BY THE ENGINEER.
4. SEE DWG C003 FOR AC OVERLAY, PAVING, PIPE TRENCH DETAILS, AND CONDUIT TRENCH DETAILS.

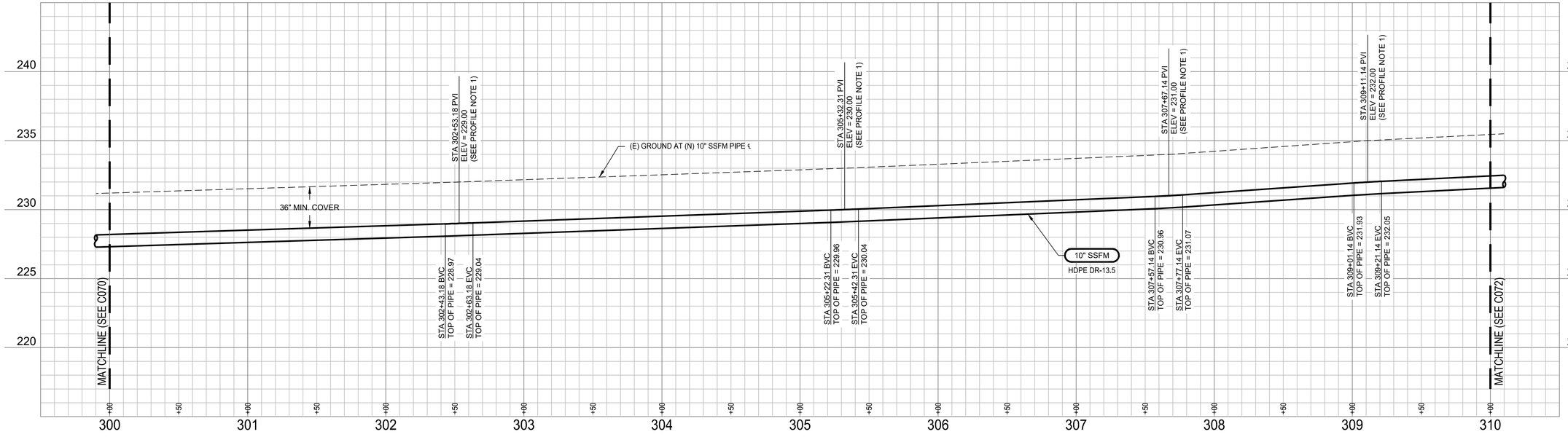

PROFILE NOTES

1. VERTICAL CURVES ARE WITHIN MANUFACTURER'S ALOWABLE PIPE DEFLECTION RADIUS (MINIMUM 62.7').
2. FIBER CONDUIT AND PULL BOXES NOT SHOWN. SEE PLAN VIEW AND SPECIFICATIONS. FOR UTILITY ELEVATION CONFLICTS, ADJUST IN THE FIELD AS APPROVED BY THE ENGINEER.

PROFILE LEGEND

- SANITARY SEWER PIPE
- HORIZONTAL BEND

Revision	By	Appd.	YY.MM.DD
BID SET	KM	GIA	2022.12.30
PERMIT SET	KM	GIA	2022.10.10
Issued	By	Appd	YYYY.MM.DD

Permit/Seal

REGISTERED PROFESSIONAL ENGINEER — GABRIEL I. ARONOW — No.55807 — Exp.12/31/24 — CIVIL — STATE OF CALIFORNIA

12/30/2022

Consultant

Stantec

Stantec Consulting Services Inc.
3875 Atherton Road
Rocklin CA 95765-3716
Tel: (916) 773-8100
www.stantec.com

Copyright Reserved

The Contractor shall verify and be responsible for all dimensions. DO NOT scale the drawing - any errors or omissions shall be reported to Stantec without delay. The Copyrights to all designs and drawings are the property of Stantec. Reproduction or use for any purpose other than that authorized by Stantec is forbidden.

Client/Project Logo

Client/Project

City of San Juan Bautista

SANITARY SEWER FORCE MAIN TO HOLLISTER PROJECT

San Juan Bautista, California

File Name: 31441-C071-C080 | AV Dwn. | KM, AV Dsgn. | GIA Chkd. | 2022.12.30 YYYY.MM.DD

Title

PLAN AND PROFILE
FREITAS RD
STA. 300+00 TO 310+00

Project No.	Scale
184031441	AS SHOWN
Revision	Sheet / Drawing No.
0	62 of 128 — C071

ORIGINAL SHEET - ANSI D

\\<\LMP\ca\hm\184031441\Drawing\sht\31441-C071-C080 2023.03.17 2:20:17 PM AM

UNDERGROUND SERVICE ALERT

CALL: 811

TWO WORKING DAYS BEFORE YOU DIG

*** CAUTION ***

BURIED AND OVERHEAD UTILITIES

CONTRACTOR TO COORDINATE WORK WITH PG&E, AT&T, SBCWD, CITY OF SAN JUAN BAUTISTA, CITY OF HOLLISTER AND ANY OTHER UTILITY COMPANIES OBSERVED ADJACENT TO THE PROJECT PRIOR TO WORKING IN THE AREA OF THEIR UTILITIES

CONSTRUCTION NOTES

1. CAUTION: OVERHEAD ELECTRIC AND/OR COMMUNICATION UTILITY CROSSING.
2. PLACE PULL BOXES IN THE SHOULDER, 3' OFF THE AC PAVEMENT, UNO.

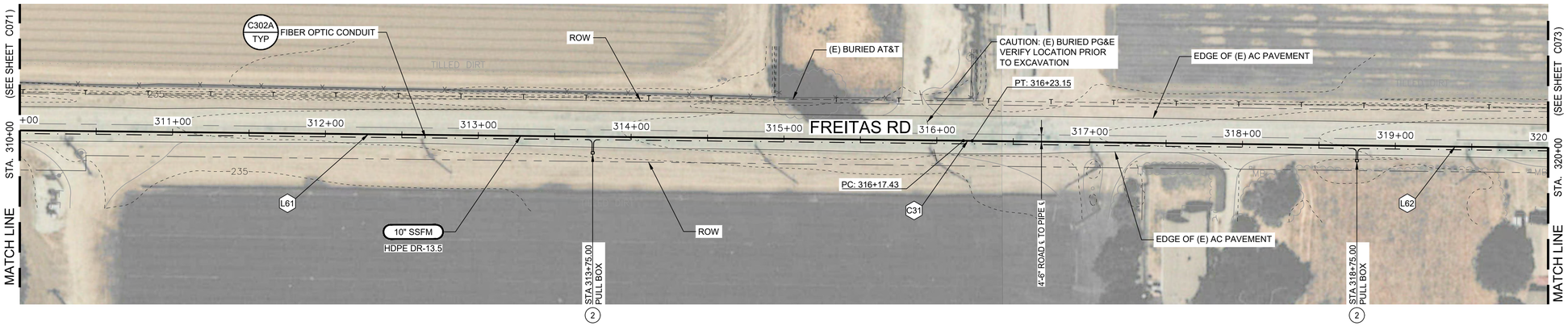

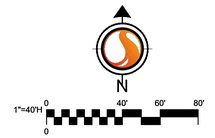

PLAN VIEW LEGEND

- EXISTING PIPE — 8" SS
- NEW PIPE — 10" SSFM
- FIBER OPTIC CONDUIT
- FIBER OPTIC PULL BOX

GENERAL NOTES

1. SEE DWG C081 FOR NEW SSFM ALIGNMENT CURVE AND LINE TABLES.
2. ALL WORK MUST BE COMPLETED WITHIN THE ROW, OUTSIDE OF DRAINAGE DITCHES. NO WORK OR ACCESS IS ALLOWED IN THE DRAINAGE DITCHES.
3. PROVIDE STAKES FOR THE 10" HDPE SSFM AT 250 FT INTERVALS AND AT ALL CHANGES IN ALIGNMENT, END OF PIPE AND BURIED VALVES. STAKES MAY BE OFFSET TO AVOID DRIVE AREAS (IN THE SHOULDER) AS APPROVED BY THE ENGINEER.
4. SEE DWG C003 FOR AC OVERLAY, PAVING, PIPE TRENCH DETAILS, AND CONDUIT TRENCH DETAILS.

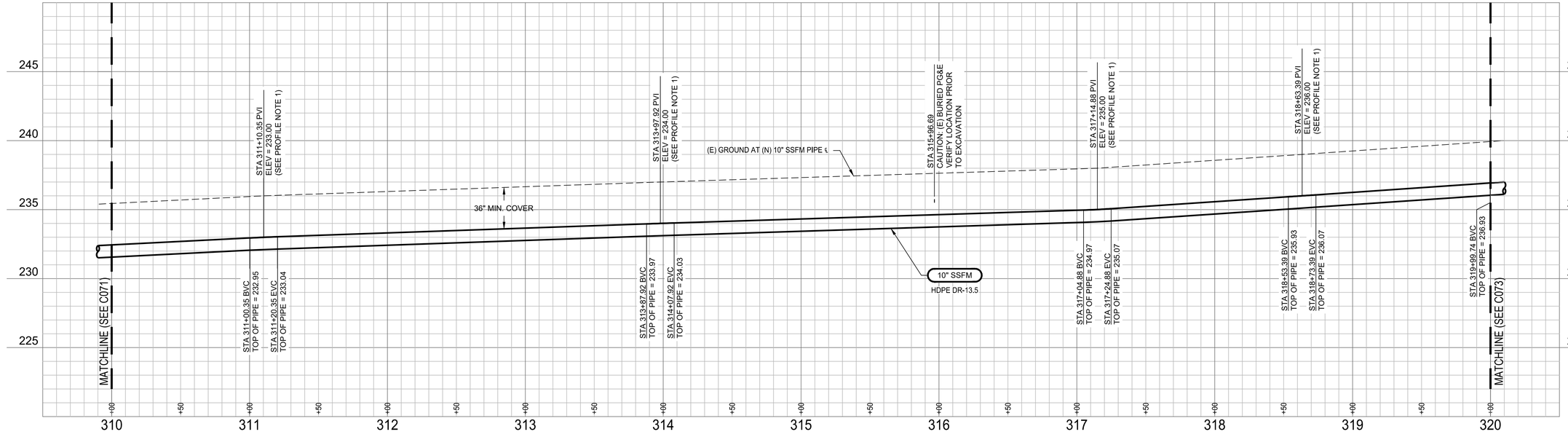

PROFILE NOTES

1. VERTICAL CURVES ARE WITHIN MANUFACTURER'S ALOWABLE PIPE DEFLECTION RADIUS (MINIMUM 62.7').
2. FIBER CONDUIT AND PULL BOXES NOT SHOWN. SEE PLAN VIEW AND SPECIFICATIONS. FOR UTILITY ELEVATION CONFLICTS, ADJUST IN THE FIELD AS APPROVED BY THE ENGINEER.

PROFILE LEGEND

- SANITARY SEWER PIPE
- HORIZONTAL BEND

Revision	By	Appd.	YY.MM.DD
BID SET	KM	GIA	2022.12.30
PERMIT SET	KM	GIA	2022.10.10
Issued	By	Appd	YYYY.MM.DD

Permit/Seal

REGISTERED PROFESSIONAL ENGINEER
GABRIEL I. ARONOW
No.55807
Exp.12/31/24
CIVIL
STATE OF CALIFORNIA

12/30/2022

Consultant

Stantec

Stantec Consulting Services Inc.
3875 Atherton Road
Rocklin CA 95765-3716
Tel: (916) 773-8100
www.stantec.com

Copyright Reserved

The Contractor shall verify and be responsible for all dimensions. DO NOT scale the drawing - any errors or omissions shall be reported to Stantec without delay. The Copyrights to all designs and drawings are the property of Stantec. Reproduction or use for any purpose other than that authorized by Stantec is forbidden.

Client/Project Logo

Client/Project

City of San Juan Bautista

SANITARY SEWER FORCE MAIN TO HOLLISTER PROJECT

San Juan Bautista, California

File Name: 31441-C071-C080	AV	KM, AV	GIA	2022.12.30
	Dwn.	Dsgn.	Chkd.	YYYY.MM.DD

Title

PLAN AND PROFILE
FREITAS RD
STA. 310+00 TO 320+00

Project No.	Scale
184031441	AS SHOWN
Revision	Sheet
0	63 of 128

Drawing No.

C072

ORIGINAL SHEET - ANSI D

\\<\LMD\active\184031441\project\civil\31441-C071-C080 2023.01.12 8:23 AM

UNDERGROUND SERVICE ALERT

CALL: 811

TWO WORKING DAYS BEFORE YOU DIG

*** CAUTION ***

BURIED AND OVERHEAD UTILITIES

CONTRACTOR TO COORDINATE WORK WITH PG&E, AT&T, SBCWD, CITY OF SAN JUAN BAUTISTA, CITY OF HOLLISTER AND ANY OTHER UTILITY COMPANIES OBSERVED ADJACENT TO THE PROJECT PRIOR TO WORKING IN THE AREA OF THEIR UTILITIES

CONSTRUCTION NOTES

1. CAUTION: OVERHEAD ELECTRIC AND/OR COMMUNICATION UTILITY CROSSING.
2. PLACE PULL BOXES AND SCAV VALVE BOX IN THE SHOULDER, 3' OFF THE AC PAVEMENT, UNO.

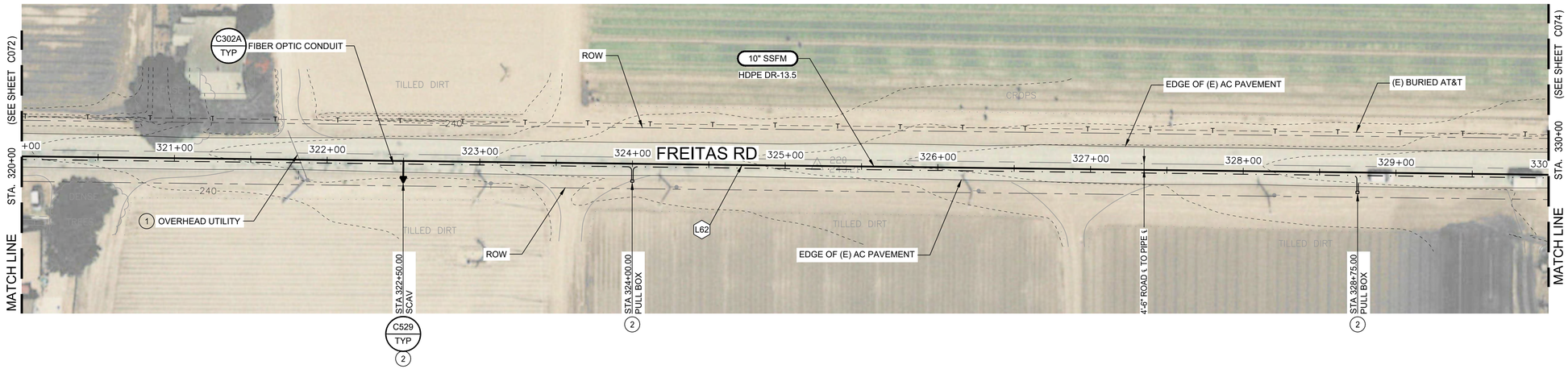

N

1"=40'H 0 40' 60' 80'

PLAN VIEW LEGEND

EXISTING PIPE — 8" SS

NEW PIPE — 10" SSFM

FIBER OPTIC CONDUIT

FIBER OPTIC PULL BOX

GENERAL NOTES

1. SEE DWG C081 FOR NEW SSFM ALIGNMENT CURVE AND LINE TABLES.
2. ALL WORK MUST BE COMPLETED WITHIN THE ROW, OUTSIDE OF DRAINAGE DITCHES. NO WORK OR ACCESS IS ALLOWED IN THE DRAINAGE DITCHES.
3. PROVIDE STAKES FOR THE 10" HDPE SSFM AT 250 FT INTERVALS AND AT ALL CHANGES IN ALIGNMENT, END OF PIPE AND BURIED VALVES. STAKES MAY BE OFFSET TO AVOID DRIVE AREAS (IN THE SHOULDER) AS APPROVED BY THE ENGINEER.
4. SEE DWG C003 FOR AC OVERLAY, PAVING, PIPE TRENCH DETAILS, AND CONDUIT TRENCH DETAILS.

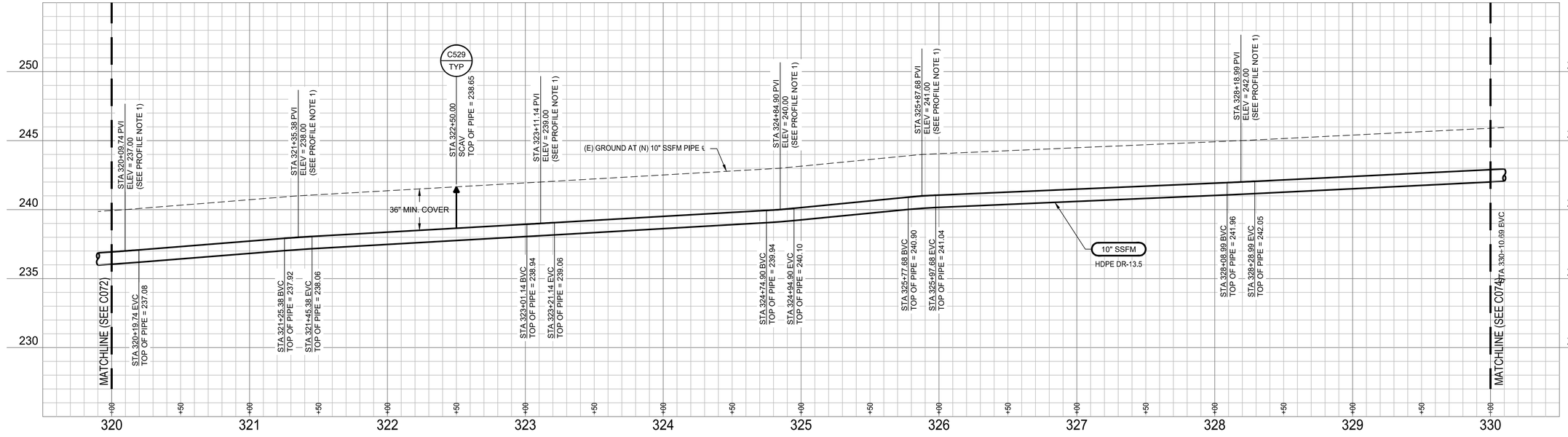

PROFILE NOTES

1. VERTICAL CURVES ARE WITHIN MANUFACTURER'S ALOWABLE PIPE DEFLECTION RADIUS (MINIMUM 62.7').
2. FIBER CONDUIT AND PULL BOXES NOT SHOWN. SEE PLAN VIEW AND SPECIFICATIONS. FOR UTILITY ELEVATION CONFLICTS, ADJUST IN THE FIELD AS APPROVED BY THE ENGINEER.

PROFILE LEGEND

SANITARY SEWER PIPE

HORIZONTAL BEND

1"=40'H 0 40' 60' 80'
1"=4'V 0 4 6 8

Revision	By	Appd.	YY.MM.DD
BID SET	KM	GIA	2022.12.30
PERMIT SET	KM	GIA	2022.10.10
Issued	By	Appd	YYYY.MM.DD

Permit/Seal

REGISTERED PROFESSIONAL ENGINEER GABRIEL I. ARONOW No.55607 Exp.12/31/24 CIVIL STATE OF CALIFORNIA

12/30/2022

Consultant

Stantec

Stantec Consulting Services Inc.
3875 Atherton Road
Rocklin CA 95765-3716
Tel: (916) 773-8100
www.stantec.com

Copyright Reserved

The Contractor shall verify and be responsible for all dimensions. DO NOT scale the drawing - any errors or omissions shall be reported to Stantec without delay. The Copyrights to all designs and drawings are the property of Stantec. Reproduction or use for any purpose other than that authorized by Stantec is forbidden.

Client/Project Logo

Client/Project

City of San Juan Bautista

SANITARY SEWER FORCE MAIN TO HOLLISTER PROJECT

San Juan Bautista, California

File Name: 31441-C071-C080 | AV Dwn. | KM, AV Dsgn. | GIA Chkd. | 2022.12.30 YYYY.MM.DD

Title

PLAN AND PROFILE
FREITAS RD
STA. 320+00 TO 330+00

Project No. 184031441

Scale AS SHOWN

Revision 0 | Sheet 64 of 128

Drawing No. C073

I:\1MP\Jobs\1MP031441\Drawing\dwt\31441-C071-C080 2020.03 | 2:2:04:41 AM

ORIGINAL SHEET - ANSI D

UNDERGROUND SERVICE ALERT

CALL: 811

TWO WORKING DAYS BEFORE YOU DIG

*** CAUTION ***

BURIED AND OVERHEAD UTILITIES

CONTRACTOR TO COORDINATE WORK WITH PG&E, AT&T, SBCWD, CITY OF SAN JUAN BAUTISTA, CITY OF HOLLISTER AND ANY OTHER UTILITY COMPANIES OBSERVED ADJACENT TO THE PROJECT PRIOR TO WORKING IN THE AREA OF THEIR UTILITIES

CONSTRUCTION NOTES

1. CAUTION: OVERHEAD ELECTRIC AND/OR COMMUNICATION UTILITY CROSSING.
2. PLACE PULL BOXES IN THE SHOULDER, 3' OFF THE AC PAVEMENT, UNO.

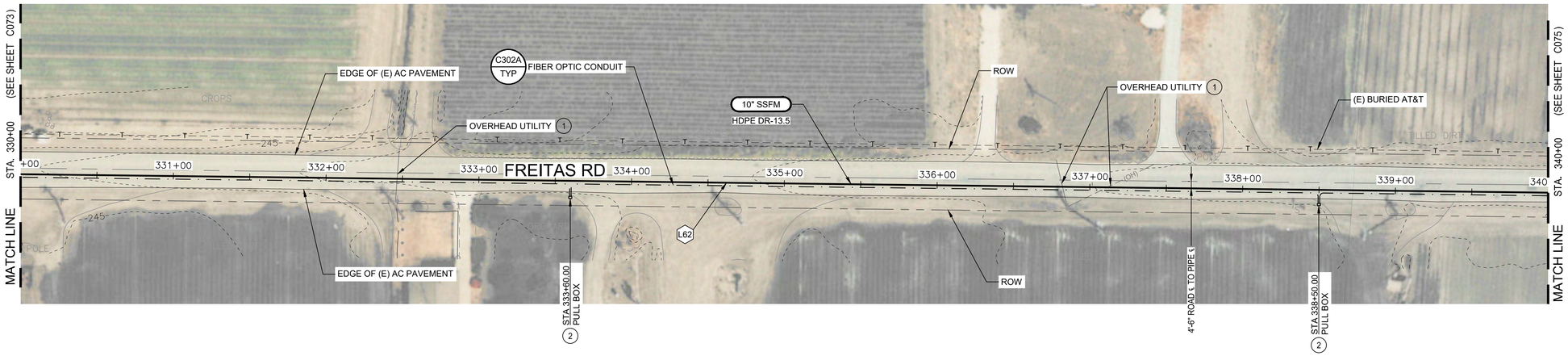

PLAN VIEW LEGEND

- EXISTING PIPE — 8" SS
- NEW PIPE — 10" SSFM
- FIBER OPTIC CONDUIT
- FIBER OPTIC PULL BOX

GENERAL NOTES

1. SEE DWG C081 FOR NEW SSFM ALIGNMENT CURVE AND LINE TABLES.
2. ALL WORK MUST BE COMPLETED WITHIN THE ROW, OUTSIDE OF DRAINAGE DITCHES. NO WORK OR ACCESS IS ALLOWED IN THE DRAINAGE DITCHES.
3. PROVIDE STAKES FOR THE 10" HDPE SSFM AT 250 FT INTERVALS AND AT ALL CHANGES IN ALIGNMENT, END OF PIPE AND BURIED VALVES. STAKES MAY BE OFFSET TO AVOID DRIVE AREAS (IN THE SHOULDER) AS APPROVED BY THE ENGINEER.
4. SEE DWG C003 FOR AC OVERLAY, PAVING, PIPE TRENCH DETAILS, AND CONDUIT TRENCH DETAILS.

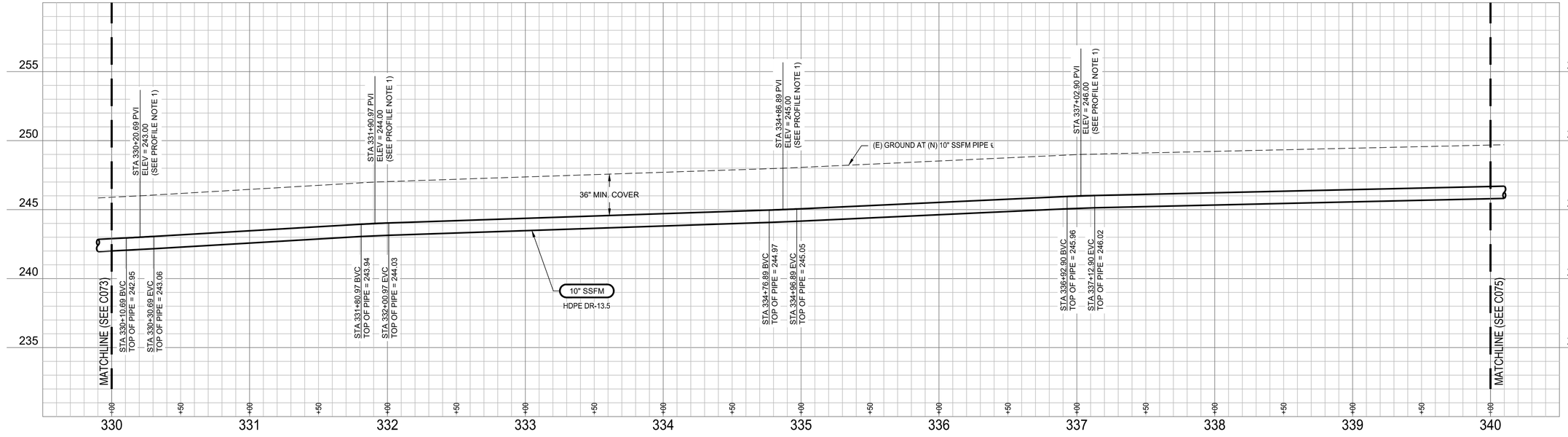

PROFILE NOTES

1. VERTICAL CURVES ARE WITHIN MANUFACTURER'S ALOWABLE PIPE DEFLECTION RADIUS (MINIMUM 62.7').
2. FIBER CONDUIT AND PULL BOXES NOT SHOWN. SEE PLAN VIEW AND SPECIFICATIONS. FOR UTILITY ELEVATION CONFLICTS, ADJUST IN THE FIELD AS APPROVED BY THE ENGINEER.

PROFILE LEGEND

- SANITARY SEWER PIPE
- HORIZONTAL BEND

Revision	By	Appd.	YY.MM.DD
BID SET	KM	GIA	2022.12.30
PERMIT SET	KM	GIA	2022.10.10
Issued	By	Appd	YYYY.MM.DD

Permit/Seal

REGISTERED PROFESSIONAL ENGINEER — GABRIEL I. ARONOW — No.55807 — Exp.12/31/24 — STATE OF CALIFORNIA — CIVIL

12/30/2022

Consultant

Stantec

Stantec Consulting Services Inc.
3875 Atherton Road
Rocklin CA 95765-3716
Tel: (916) 773-8100
www.stantec.com

Copyright Reserved

The Contractor shall verify and be responsible for all dimensions. DO NOT scale the drawing - any errors or omissions shall be reported to Stantec without delay. The Copyrights to all designs and drawings are the property of Stantec. Reproduction or use for any purpose other than that authorized by Stantec is forbidden.

Client/Project Logo

Client/Project

City of San Juan Bautista

SANITARY SEWER FORCE MAIN TO HOLLISTER PROJECT

San Juan Bautista, California

File Name: 31441-C071-C080	AV	KM, AV	GIA	2022.12.30
	Dwn.	Dsgn.	Chkd.	YYYY.MM.DD

Title

PLAN AND PROFILE
FREITAS RD
STA. 330+00 TO 340+00

Project No.	Scale
184031441	AS SHOWN
Revision	Sheet / Drawing No.
0	65 of 128 — C074

ORIGINAL SHEET - ANSI D

\\<\LMD\active\184031441\gdrawing\civil\31441-C071-C080 2023.01.12 9:13:54 AM

UNDERGROUND SERVICE ALERT

CALL: 811

TWO WORKING DAYS BEFORE YOU DIG

* CAUTION *

BURIED AND OVERHEAD UTILITIES

CONTRACTOR TO COORDINATE WORK WITH PG&E, AT&T, SBCWD, CITY OF SAN JUAN BAUTISTA, CITY OF HOLLISTER AND ANY OTHER UTILITY COMPANIES OBSERVED ADJACENT TO THE PROJECT PRIOR TO WORKING IN THE AREA OF THEIR UTILITIES

CONSTRUCTION NOTES

1. CAUTION: OVERHEAD ELECTRIC AND/OR COMMUNICATION UTILITY CROSSING.
2. PLACE PULL BOXES AND SCAV VALVE BOX IN THE SHOULDER, 3' OFF THE AC PAVEMENT, UNO.
3. BUTT FUSION ELBOWS SHALL BE RADIUS ELBOWS (NOT MITERED ELBOWS).

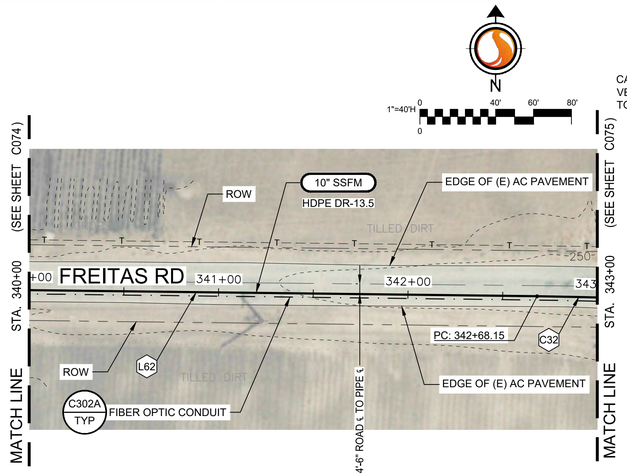

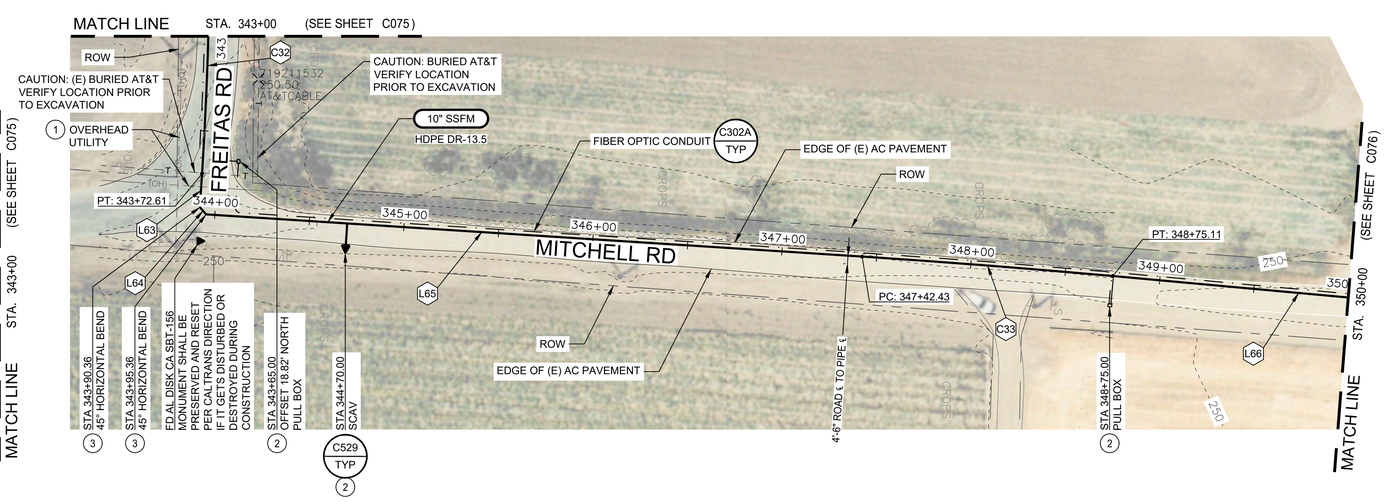

PLAN VIEW LEGEND

- EXISTING PIPE — 8" SS
- NEW PIPE — 10" SSFM
- FIBER OPTIC CONDUIT
- FIBER OPTIC PULL BOX

GENERAL NOTES

1. SEE DWG C081 FOR NEW SSFM ALIGNMENT CURVE AND LINE TABLES.
2. ALL WORK MUST BE COMPLETED WITHIN THE ROW, OUTSIDE OF DRAINAGE DITCHES. NO WORK OR ACCESS IS ALLOWED IN THE DRAINAGE DITCHES.
3. PROVIDE STAKES FOR THE 10" HDPE SSFM AT 250 FT INTERVALS AND AT ALL CHANGES IN ALIGNMENT, END OF PIPE AND BURIED VALVES. STAKES MAY BE OFFSET TO AVOID DRIVE AREAS (IN THE SHOULDER) AS APPROVED BY THE ENGINEER.
4. SEE DWG C003 FOR AC OVERLAY, PAVING, PIPE TRENCH DETAILS, AND CONDUIT TRENCH DETAILS.

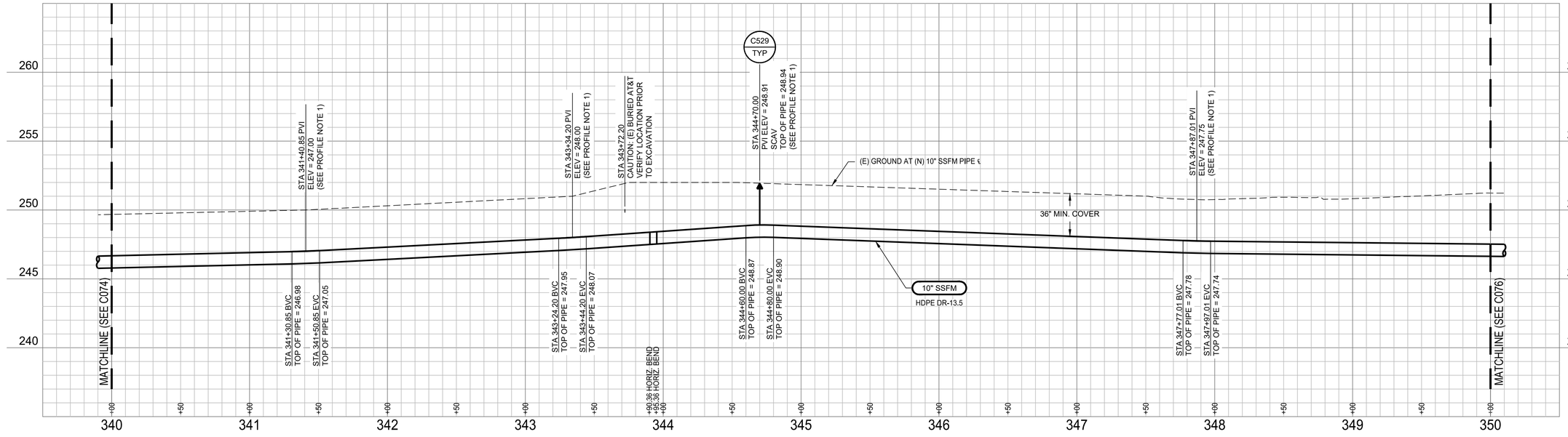

PROFILE NOTES

1. VERTICAL CURVES ARE WITHIN MANUFACTURER'S ALOWABLE PIPE DEFLECTION RADIUS (MINIMUM 62.7').
2. FIBER CONDUIT AND PULL BOXES NOT SHOWN. SEE PLAN VIEW AND SPECIFICATIONS. FOR UTILITY ELEVATION CONFLICTS, ADJUST IN THE FIELD AS APPROVED BY THE ENGINEER.

PROFILE LEGEND

- SANITARY SEWER PIPE
- HORIZONTAL BEND

1"=40'H, 1"=4'V

Revision	By	Appd.	YY.MM.DD
BID SET	KM	GIA	2022.12.30
PERMIT SET	KM	GIA	2022.10.10
Issued	By	Appd	YYYY.MM.DD

Permit/Seal

REGISTERED PROFESSIONAL ENGINEER — GABRIEL I. ARONOW — No.55607 — Exp.12/31/24 — CIVIL — STATE OF CALIFORNIA

12/30/2022

Consultant

Stantec

Stantec Consulting Services Inc.
3875 Atherton Road
Rocklin CA 95765-3716
Tel: (916) 773-8100
www.stantec.com

Copyright Reserved

The Contractor shall verify and be responsible for all dimensions. DO NOT scale the drawing - any errors or omissions shall be reported to Stantec without delay. The Copyrights to all designs and drawings are the property of Stantec. Reproduction or use for any purpose other than that authorized by Stantec is forbidden.

Client/Project Logo

Client/Project

City of San Juan Bautista

SANITARY SEWER FORCE MAIN TO HOLLISTER PROJECT

San Juan Bautista, California

File Name: 31441-C071-C080 | AV Dwn. | KM, AV Dsgn. | GIA Chkd. | 2022.12.30 YYYY.MM.DD

Title

PLAN AND PROFILE
FREITAS RD AND MITCHELL RD
STA. 340+00 TO 350+00

Project No. 184031441 | Scale AS SHOWN

Revision 0 | Sheet 66 of 128 | Drawing No. C075

ORIGINAL SHEET - ANSI D

\\<LMD.path>\<LMD31441.\Gdrawing\civil\31441-C071-C080 2023.01.12 2:15:31 AM

UNDERGROUND SERVICE ALERT

CALL: 811

TWO WORKING DAYS BEFORE YOU DIG

*** CAUTION ***

BURIED AND OVERHEAD UTILITIES

CONTRACTOR TO COORDINATE WORK WITH PG&E, AT&T, SBCWD, CITY OF SAN JUAN BAUTISTA, CITY OF HOLLISTER AND ANY OTHER UTILITY COMPANIES OBSERVED ADJACENT TO THE PROJECT PRIOR TO WORKING IN THE AREA OF THEIR UTILITIES

CONSTRUCTION NOTES

1. CAUTION: OVERHEAD ELECTRIC AND/OR COMMUNICATION UTILITY CROSSING.
2. PLACE PULL BOXES, SCAV AND BOV VALVE BOXES IN THE SHOULDER, 3' OFF THE EDGE OF GRAVEL ROAD, UNO.
3. CONTRACTOR SHALL RESTORE GRAVEL ROAD TO PRE-CONSTRUCTION CONDITIONS.
4. BUTT FUSION ELBOWS SHALL BE RADIUS ELBOWS (NOT MITERED ELBOWS).

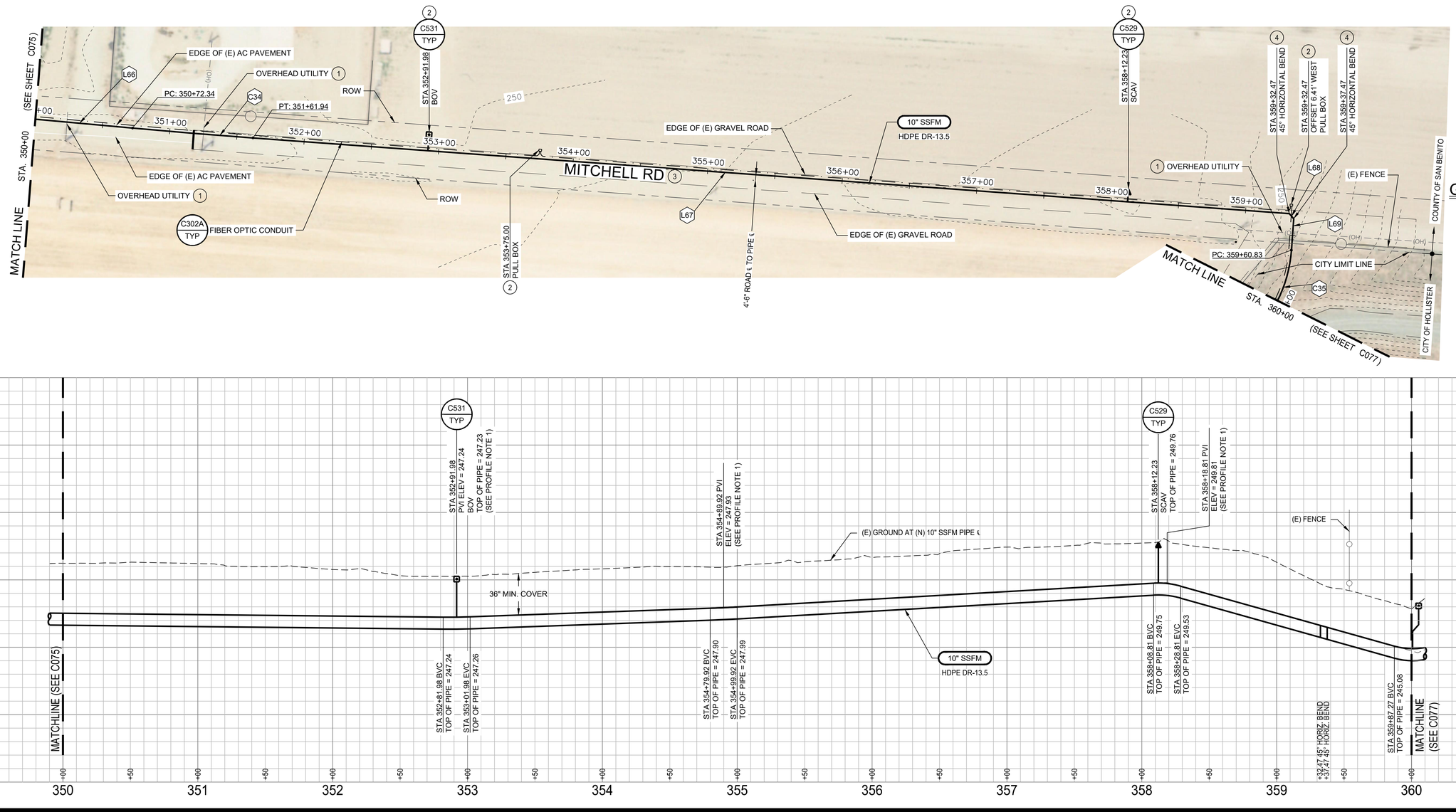

PLAN VIEW LEGEND

- EXISTING PIPE — 8" SS
- NEW PIPE — 10" SSFM
- FIBER OPTIC CONDUIT
- FIBER OPTIC PULL BOX

1"=40'H (0, 40', 60', 80')

GENERAL NOTES

1. SEE DWG C081 FOR NEW SSFM ALIGNMENT CURVE AND LINE TABLES.
2. ALL WORK MUST BE COMPLETED WITHIN THE ROW, OUTSIDE OF DRAINAGE DITCHES. NO WORK OR ACCESS IS ALLOWED IN THE DRAINAGE DITCHES.
3. PROVIDE STAKES FOR THE 10" HDPE SSFM AT 250 FT INTERVALS AND AT ALL CHANGES IN ALIGNMENT, END OF PIPE AND BURIED VALVES. STAKES MAY BE OFFSET TO AVOID DRIVE AREAS (IN THE SHOULDER) AS APPROVED BY THE ENGINEER.
4. SEE DWG C003 FOR AC OVERLAY, PAVING, PIPE TRENCH DETAILS, AND CONDUIT TRENCH DETAILS.

PROFILE NOTES

1. VERTICAL CURVES ARE WITHIN MANUFACTURER'S ALOWABLE PIPE DEFLECTION RADIUS (MINIMUM 62.7').
2. FIBER CONDUIT AND PULL BOXES NOT SHOWN. SEE PLAN VIEW AND SPECIFICATIONS. FOR UTILITY ELEVATION CONFLICTS, ADJUST IN THE FIELD AS APPROVED BY THE ENGINEER.

PROFILE LEGEND

- SANITARY SEWER PIPE
- HORIZONTAL BEND

1"=40'H (0, 40', 60', 80') 1"=4'V (0, 4, 6, 8)

Revision	By	Appd.	YY.MM.DD
BID SET	KM	GIA	2022.12.30
PERMIT SET	KM	GIA	2022.10.10
Issued	By	Appd	YYYY.MM.DD

Permit/Seal

REGISTERED PROFESSIONAL ENGINEER — GABRIEL I. ARONOW — No.55607 — Exp.12/31/24 — STATE OF CALIFORNIA — CIVIL

12/30/2022

Consultant

Stantec

Stantec Consulting Services Inc.
3875 Atherton Road
Rocklin CA 95765-3716
Tel: (916) 773-8100
www.stantec.com

Copyright Reserved

The Contractor shall verify and be responsible for all dimensions. DO NOT scale the drawing - any errors or omissions shall be reported to Stantec without delay. The Copyrights to all designs and drawings are the property of Stantec. Reproduction or use for any purpose other than that authorized by Stantec is forbidden.

Client/Project Logo

Client/Project

City of San Juan Bautista

SANITARY SEWER FORCE MAIN TO HOLLISTER PROJECT

San Juan Bautista, California

File Name: 31441-C071-C080	AV	KM, AV	GIA	2022.12.30
	Dwn.	Dsgn.	Chkd.	YYYY.MM.DD

Title

PLAN AND PROFILE - MITCHELL RD AND HOLLISTER WWTP ACCESS RD STA. 350+00 TO 360+00

Project No.	Scale
184031441	AS SHOWN
Revision	Sheet
0	67 of 128

Drawing No. C076

ORIGINAL SHEET - ANSI D

\\<\LMP\ca\hrv\184031441\gisdwg\qc\c\31441-c071-c080 2023.03.13 2:18:07 AM

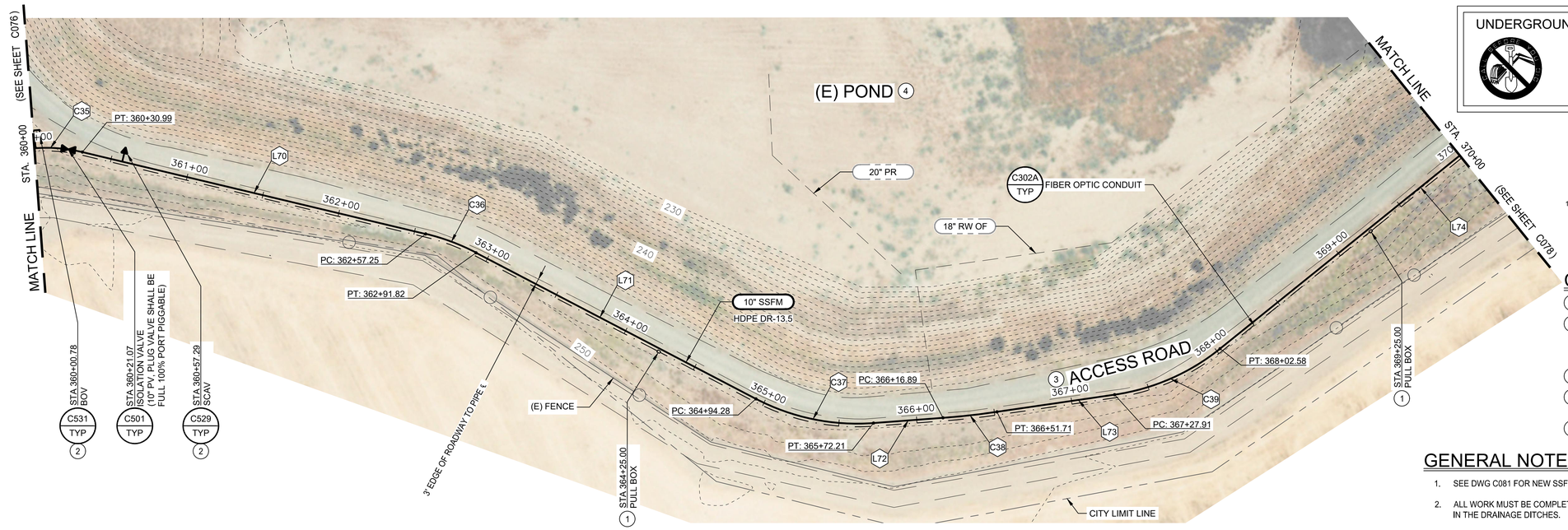

UNDERGROUND SERVICE ALERT

CALL: 811

TWO WORKING DAYS BEFORE YOU DIG

* CAUTION *

BURIED AND OVERHEAD UTILITIES

CONTRACTOR TO COORDINATE WORK WITH PG&E, AT&T, SBCWD, CITY OF SAN JUAN BAUTISTA, CITY OF HOLLISTER AND ANY OTHER UTILITY COMPANIES OBSERVED ADJACENT TO THE PROJECT PRIOR TO WORKING IN THE AREA OF THEIR UTILITIES

PLAN VIEW LEGEND

- EXISTING PIPE — 8" SS
- NEW PIPE — 10" SSFM
- FIBER OPTIC CONDUIT
- FIBER OPTIC PULL BOX

CONSTRUCTION NOTES

1. PLACE PULL BOXES IN THE SHOULDER, ABOVE FIBER OPTIC CONDUIT.
2. BOV AND SCAV SYMBOLS ARE SHOWN AWAY FROM THE PIPE FOR CLARITY (NOT TO SCALE). VALVES SHALL BE LOCATED AS CLOSE TO PIPE AS FEASIBLE AND ON THE ROADSIDE OF THE PIPE IF FEASIBLE WITH A MINIMUM OFFSET FROM ROADWAYS OF 3 FEET. FIELD POSITION AS APPROVED BY THE ENGINEER.
3. CONTRACTOR SHALL RESTORE GRAVEL ROAD TO PRE-CONSTRUCTION CONDITIONS.
4. CONTRACTOR SHALL PROTECT EXISTING PONDS FROM ANY DAMAGE DURING CONSTRUCTION ACTIVITIES.
5. INSTALL CUTOFF WALL EVERY 100 FEET FROM STA 360+00 TO STA 370+00, SEE DETAIL C305/TYP.

GENERAL NOTES

1. SEE DWG C081 FOR NEW SSFM ALIGNMENT CURVE AND LINE TABLES.
2. ALL WORK MUST BE COMPLETED WITHIN THE ROW, OUTSIDE OF DRAINAGE DITCHES. NO WORK OR ACCESS IS ALLOWED IN THE DRAINAGE DITCHES.
3. PROVIDE STAKES FOR THE 10" HDPE SSFM AT 250 FT INTERVALS AND AT ALL CHANGES IN ALIGNMENT, END OF PIPE AND BURIED VALVES. STAKES MAY BE OFFSET TO AVOID DRIVE AREAS (IN THE SHOULDER) AS APPROVED BY THE ENGINEER.
4. SEE DWG C003 FOR AC OVERLAY, PAVING, PIPE TRENCH DETAILS, AND CONDUIT TRENCH DETAILS.

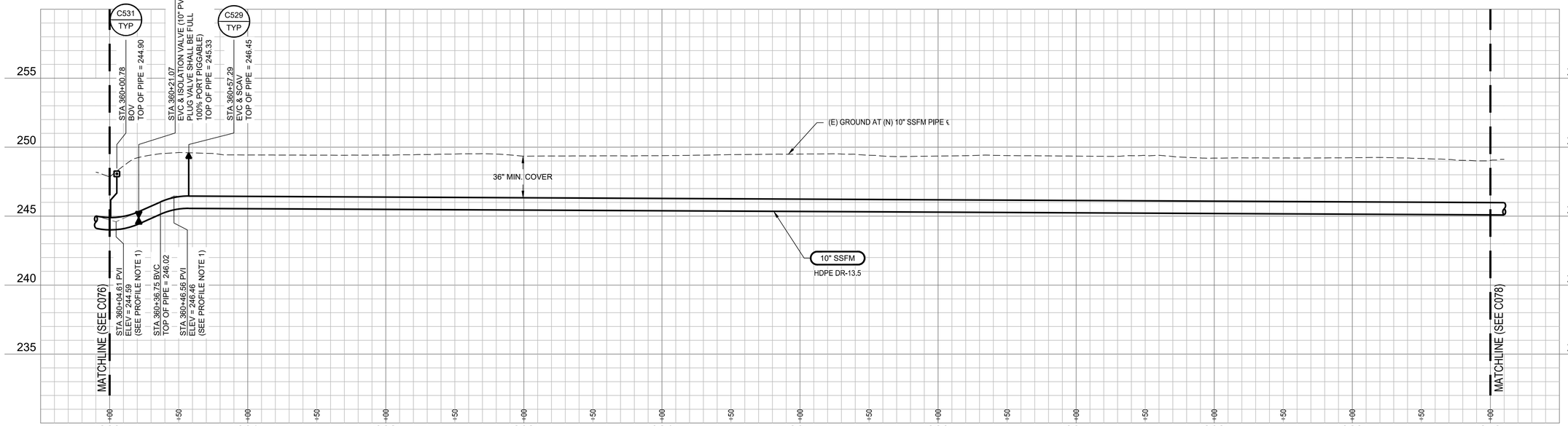

PROFILE NOTES

1. VERTICAL CURVES ARE WITHIN MANUFACTURER'S ALOWABLE PIPE DEFLECTION RADIUS (MINIMUM 62.7').
2. FIBER CONDUIT AND PULL BOXES NOT SHOWN. SEE PLAN VIEW AND SPECIFICATIONS. FOR UTILITY ELEVATION CONFLICTS, ADJUST IN THE FIELD AS APPROVED BY THE ENGINEER.

PROFILE LEGEND

- SANITARY SEWER PIPE
- HORIZONTAL BEND

1"=40'H: 0, 40', 60', 80'
1"=4'V: 0, 4, 6, 8

Revision	By	Appd.	YY.MM.DD
BID SET	KM	GIA	2022.12.30
PERMIT SET	KM	GIA	2022.10.10
Issued	By	Appd	YYYY.MM.DD

Permit/Seal

REGISTERED PROFESSIONAL ENGINEER
GABRIEL I. ARONOW
No. 55807
Exp.12/31/24
CIVIL
STATE OF CALIFORNIA

12/30/2022

Consultant

Stantec

Stantec Consulting Services Inc.
3875 Atherton Road
Rocklin CA 95765-3716
Tel: (916) 773-8100
www.stantec.com

Copyright Reserved

The Contractor shall verify and be responsible for all dimensions. DO NOT scale the drawing - any errors or omissions shall be reported to Stantec without delay. The Copyrights to all designs and drawings are the property of Stantec. Reproduction or use for any purpose other than that authorized by Stantec is forbidden.

Client/Project Logo

Client/Project

City of San Juan Bautista

SANITARY SEWER FORCE MAIN TO HOLLISTER PROJECT

San Juan Bautista, California

File Name: 31441-C071-C080 | AV Dwn. | KM, AV Dsgn. | GIA Chkd. | 2022.12.30 YYYY.MM.DD

Title

PLAN AND PROFILE
HOLLISTER WWTP ACCESS ROAD
STA. 360+00 TO 370+00

Project No. 184031441

Scale AS SHOWN

Revision 0 | Sheet 68 of 128

Drawing No. C077

ORIGINAL SHEET - ANSI D

\\<LMD\.cdr\m\184031441\cpnwrkg\cad\31441-c071-c080 2020.01.12 2:19:26 AM

UNDERGROUND SERVICE ALERT

CALL: 811

TWO WORKING DAYS BEFORE YOU DIG

* CAUTION *

BURIED AND OVERHEAD UTILITIES

CONTRACTOR TO COORDINATE WORK WITH PG&E, AT&T, SBCWD, CITY OF SAN JUAN BAUTISTA, CITY OF HOLLISTER AND ANY OTHER UTILITY COMPANIES OBSERVED ADJACENT TO THE PROJECT PRIOR TO WORKING IN THE AREA OF THEIR UTILITIES

CONSTRUCTION NOTES

1. CONTRACTOR TO R&W (E) 24" PVC PIPE IN THE 42" CASING PIPE.
2. CONTRACTOR SHALL INSTALL (N) 10" SSFM INSIDE (E) 42" CASING PIPE.
3. PLACE PULL BOXES IN THE SHOULDER, ABOVE FIBER OPTIC CONDUIT.
4. CONTRACTOR TO SECURE AND MAINTAIN INTEGRITY OF THE FENCE, OR REPLACE IN KIND AS APPROVED IF DAMAGED DUE TO CONSTRUCTION ACTIVITIES .
5. BOV AND SCAV SYMBOLS ARE SHOWN AWAY FROM THE PIPE FOR CLARITY (NOT TO SCALE). VALVES SHALL BE LOCATED AS CLOSE TO PIPE AS FEASIBLE AND ON THE ROADSIDE OF THE PIPE IF FEASIBLE WITH A MINIMUM OFFSET FROM ROADWAYS OF 3 FEET. FIELD POSITION AS APPROVED BY THE ENGINEER.
6. CONTRACTOR SHALL RESTORE GRAVEL ROAD TO PRE-CONSTRUCTION CONDITIONS.
7. CONTRACTOR SHALL PROTECT EXISTING PONDS FROM ANY DAMAGE DURING CONSTRUCTION ACTIVITIES.
8. INSTALL CUTOFF WALL EVERY 100 FEET FROM STA 370+00 TO STA 377+00, SEE DETAIL C305/TYP.
9. BUTT FUSION ELBOWS SHALL BE RADIUS ELBOWS (NOT MITERED ELBOWS).
10. CONTRACTOR TO POTHOLE AND VERIFY EXACT TERMINUS OF THE CASING PIPE.

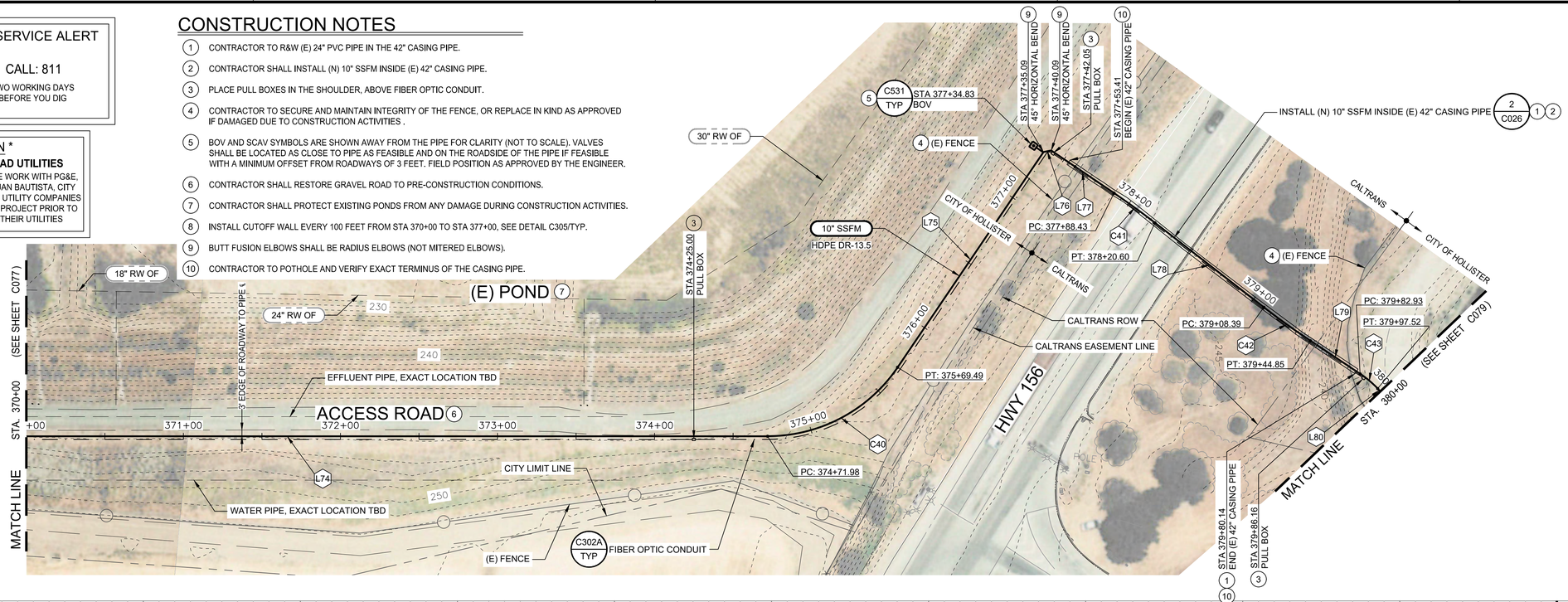

PROFILE NOTES

1. VERTICAL CURVES ARE WITHIN MANUFACTURER'S ALOWABLE PIPE DEFLECTION RADIUS (MINIMUM 62.7').
2. FIBER CONDUIT AND PULL BOXES NOT SHOWN. SEE PLAN VIEW AND SPECIFICATIONS. FOR UTILITY ELEVATION CONFLICTS, ADJUST IN THE FIELD AS APPROVED BY THE ENGINEER.

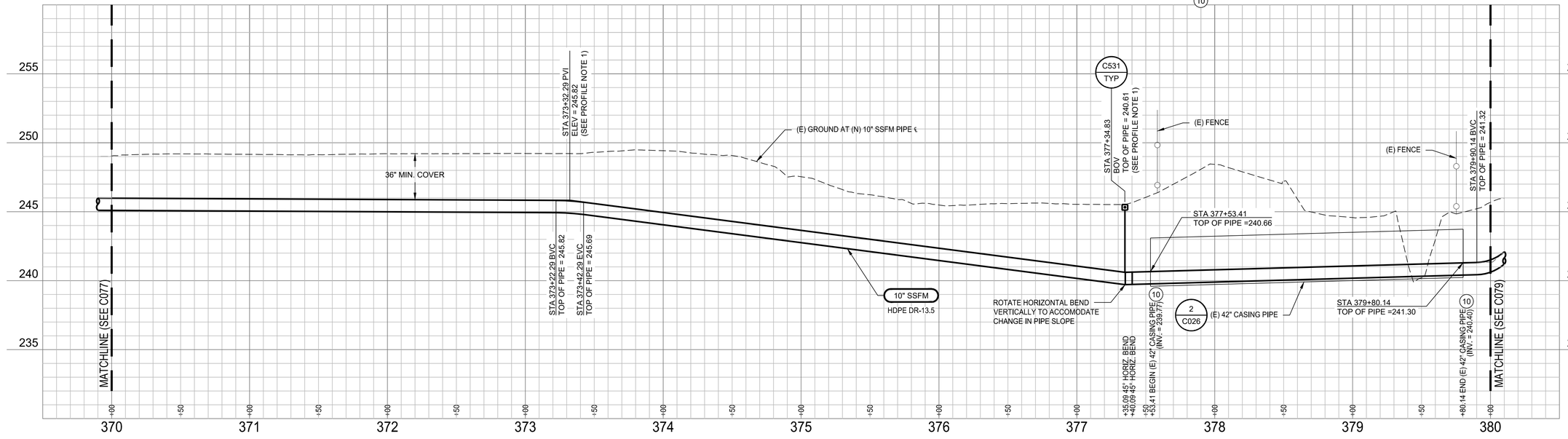

PROFILE LEGEND

SANITARY SEWER PIPE

HORIZONTAL BEND

1"=40'H 0 40' 60' 80'
1"=4'V 0 4 6 8

Revision	By	Appd.	YY.MM.DD
BID SET	KM	GIA	2022.12.30
PERMIT SET	KM	GIA	2022.10.10
Issued	By	Appd	YYYY.MM.DD

Permit/Seal

REGISTERED PROFESSIONAL ENGINEER GABRIEL I. ARONOW No.55607 Exp.12/31/24 CIVIL STATE OF CALIFORNIA

12/30/2022

Consultant

Stantec

Stantec Consulting Services Inc.
3875 Atherton Road
Rocklin CA 95765-3716
Tel: (916) 773-8100
www.stantec.com

Copyright Reserved
The Contractor shall verify and be responsible for all dimensions. DO NOT scale the drawing - any errors or omissions shall be reported to Stantec without delay.
The Copyrights to all designs and drawings are the property of Stantec. Reproduction or use for any purpose other than that authorized by Stantec is forbidden.

Client/Project Logo

Client/Project

City of San Juan Bautista

SANITARY SEWER FORCE MAIN TO HOLLISTER PROJECT

San Juan Bautista, California

File Name: 31441-C071-C080 | AV Dwn. | KM, AV Dsgn. | GIA Chkd. | 2022.12.30 YYYY.MM.DD

Title

PLAN AND PROFILE
HOLLISTER WWTP ACCESS ROAD
STA. 370+00 TO 380+00

Project No. 184031441

Scale AS SHOWN

Revision 0 Sheet 69 of 128

Drawing No. C078

ORIGINAL SHEET - ANSI D

\\<LMR_path>\Projects\184031441\Gdrawing\civil\31441-C071-C080
2023.03.02 1:04:22 AM

UNDERGROUND SERVICE ALERT

CALL: 811

TWO WORKING DAYS BEFORE YOU DIG

*** CAUTION ***

BURIED AND OVERHEAD UTILITIES

CONTRACTOR TO COORDINATE WORK WITH PG&E, AT&T, SBCWD, CITY OF SAN JUAN BAUTISTA, CITY OF HOLLISTER AND ANY OTHER UTILITY COMPANIES OBSERVED ADJACENT TO THE PROJECT PRIOR TO WORKING IN THE AREA OF THEIR UTILITIES

CONSTRUCTION NOTES

1. CONTRACTOR SHALL PROTECT EXISTING PONDS FROM ANY DAMAGE DURING CONSTRUCTION ACTIVITIES.
2. DUE TO WATER LEVELS IN (E) PONDS, CONTRACTOR SHALL BE AVAILABLE TO DEWATER AND PROTECT EXISTING UTILITIES DURING EXCAVATION ACTIVITIES.
3. CAUTION: OVERHEAD ELECTRIC AND/OR COMMUNICATION UTILITY CROSSING.
4. WORK AROUND TREES SHALL REQUIRE NOTICE TO THE ENGINEER AND CITY BIOLOGIST A MINIMUM OF 21 DAYS PRIOR TO GROUND AND TREE DISTURBANCE IN THE VICINITY TO IDENTIFY AND DISMANTLE SPECIES OF CONCERN (WOODRAT MIDDENS). CONTRACTOR SHALL WORK WITH THE ENGINEER AND BIOLOGIST TO IDENTIFY THE MINIMUM WORK CORRIDOR AND MINIMIZE TREE TRIMMING AND REMOVAL AS NEEDED FOR CONSTRUCTION AND PROVIDE EXCLUSION FENCING FOR ALL AREAS IN THE VICINITY THAT CAN REMAIN UNDISTURBED DURING CONSTRUCTION.
5. CONTRACTOR SHALL RESTORE GRAVEL ROAD TO PRE-CONSTRUCTION CONDITIONS.
6. CONTRACTOR TO POTHOLE (E) NEARBY UTILITIES, AND AREA AROUND (E) STRUCTURES PRIOR TO CONSTRUCTION.
7. INSTALL CUTOFF WALL EVERY 100 FEET FROM STA 380+00 TO STA 390+00, SEE DETAIL C305/TYP.

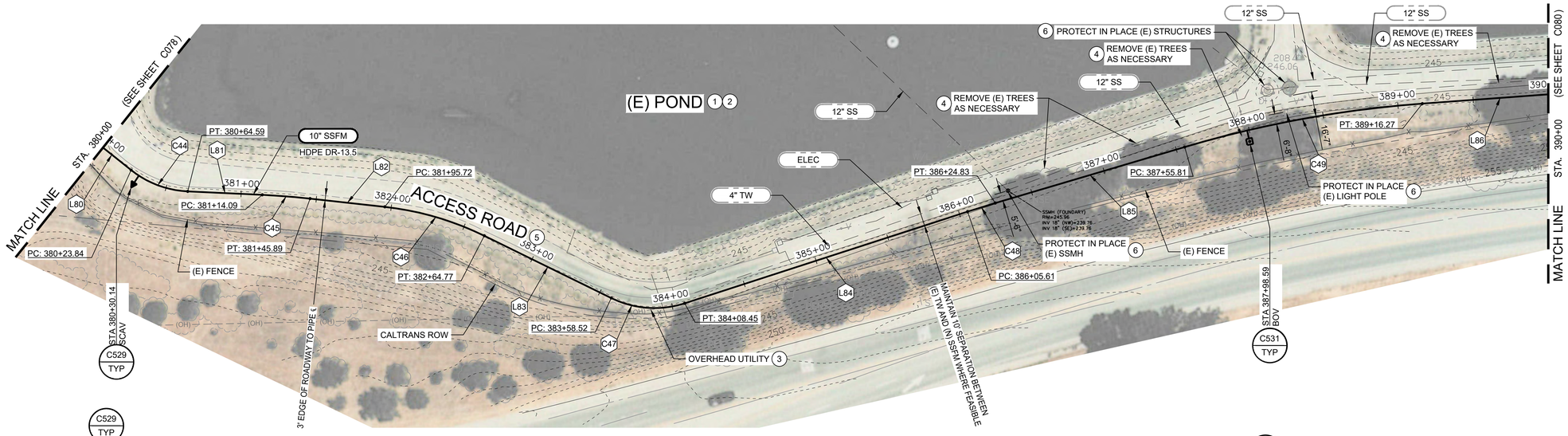

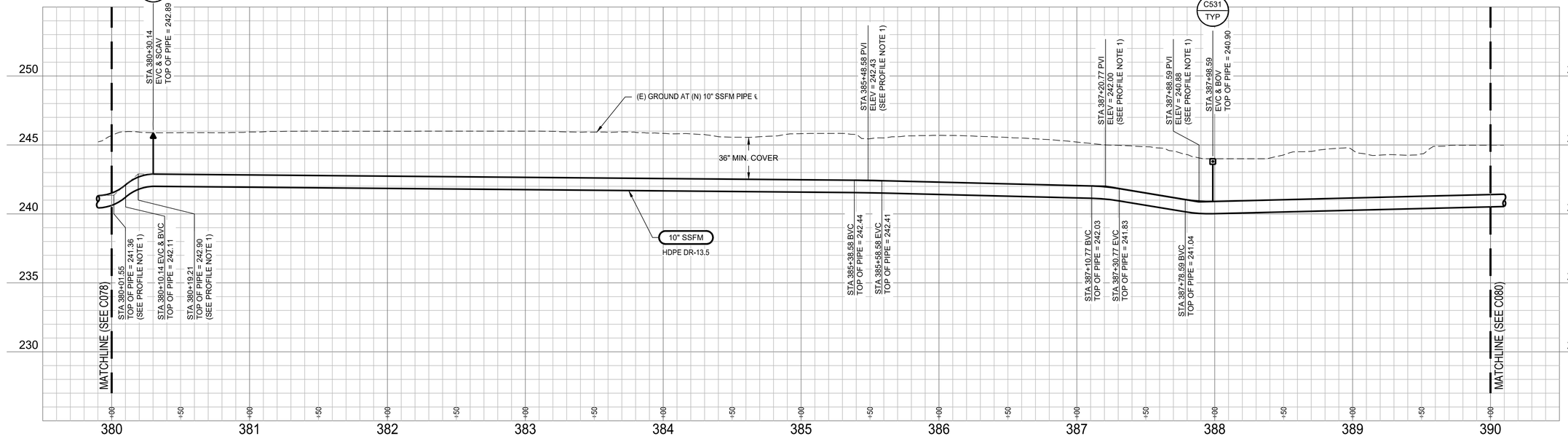

PROFILE NOTES

1. VERTICAL CURVES ARE WITHIN MANUFACTURER'S ALOWABLE PIPE DEFLECTION RADIUS (MINIMUM 62.7').

PROFILE LEGEND

SANITARY SEWER PIPE

HORIZONTAL BEND

1"=40'H, 1"=4'V

PLAN VIEW LEGEND

EXISTING PIPE — 8" SS

NEW PIPE — 10" SSFM

GENERAL NOTES

1. SEE DWG C081 FOR NEW SSFM ALIGNMENT CURVE AND LINE TABLES.
2. ALL WORK MUST BE COMPLETED WITHIN THE ROW, OUTSIDE OF DRAINAGE DITCHES. NO WORK OR ACCESS IS ALLOWED IN THE DRAINAGE DITCHES.
3. PROVIDE STAKES FOR THE 10" HDPE SSFM AT 250 FT INTERVALS AND AT ALL CHANGES IN ALIGNMENT, END OF PIPE AND BURIED VALVES. STAKES MAY BE OFFSET TO AVOID DRIVE AREAS (IN THE SHOULDER) AS APPROVED BY THE ENGINEER.
4. SEE DWG C003 FOR AC OVERLAY, PAVING, PIPE TRENCH DETAILS, AND CONDUIT TRENCH DETAILS.

Revision	By	Appd.	YY.MM.DD
BID SET	KM	GIA	2022.12.30
PERMIT SET	KM	GIA	2022.10.10
Issued	By	Appd	YYYY.MM.DD

Permit/Seal

REGISTERED PROFESSIONAL ENGINEER — GABRIEL I. ARONOW — No.55607 — Exp.12/31/24 — CIVIL — STATE OF CALIFORNIA

12/30/2022

Consultant

Stantec

Stantec Consulting Services Inc.
3875 Atherton Road
Rocklin CA 95765-3716
Tel: (916) 773-8100
www.stantec.com

Copyright Reserved

The Contractor shall verify and be responsible for all dimensions. DO NOT scale the drawing - any errors or omissions shall be reported to Stantec without delay. The Copyrights to all designs and drawings are the property of Stantec. Reproduction or use for any purpose other than that authorized by Stantec is forbidden.

Client/Project Logo

Client/Project

City of San Juan Bautista

SANITARY SEWER FORCE MAIN TO HOLLISTER PROJECT

San Juan Bautista, California

File Name: 31441-C071-C080	AV Dwn.	KM, AV Dsgn.	GIA Chkd.	2022.12.30 YYYY.MM.DD

Title

PLAN AND PROFILE
HOLLISTER WWTP ACCESS ROAD
STA. 380+00 TO 390+00

Project No.	Scale
184031441	AS SHOWN
Revision	Sheet / Drawing No.
0	70 of 128 — C079

ORIGINAL SHEET - ANSI D

\\<1.SMD\.cpf\<1.184031441\Drawing\cad\31441-C071-C080 2022.01.12 2:22:03 AM

UNDERGROUND SERVICE ALERT

CALL: 811

TWO WORKING DAYS BEFORE YOU DIG

*** CAUTION ***

BURIED AND OVERHEAD UTILITIES

CONTRACTOR TO COORDINATE WORK WITH PG&E, AT&T, SBCWD, CITY OF SAN JUAN BAUTISTA, CITY OF HOLLISTER AND ANY OTHER UTILITY COMPANIES OBSERVED ADJACENT TO THE PROJECT PRIOR TO WORKING IN THE AREA OF THEIR UTILITIES

GENERAL NOTES

1. SEE DWG C081 FOR NEW SSFM ALIGNMENT CURVE AND LINE TABLES.
2. ALL WORK MUST BE COMPLETED WITHIN THE ROW, OUTSIDE OF DRAINAGE DITCHES. NO WORK OR ACCESS IS ALLOWED IN THE DRAINAGE DITCHES.
3. PROVIDE STAKES FOR THE 10" HDPE SSFM AT 250 FT INTERVALS AND AT ALL CHANGES IN ALIGNMENT, END OF PIPE AND BURIED VALVES. STAKES MAY BE OFFSET TO AVOID DRIVE AREAS (IN THE SHOULDER) AS APPROVED BY THE ENGINEER.
4. SEE DWG C003 FOR AC OVERLAY, PAVING, PIPE TRENCH DETAILS, AND CONDUIT TRENCH DETAILS.

CONSTRUCTION NOTES

1. CONTRACTOR SHALL PROTECT EXISTING PONDS FROM ANY DAMAGE DURING CONSTRUCTION ACTIVITIES.
2. DUE TO WATER LEVELS IN (E) PONDS, CONTRACTOR SHALL BE AVAILABLE TO DEWATER AND PROTECT EXISTING UTILITIES DURING EXCAVATION ACTIVITIES.
3. WORK AROUND TREES SHALL REQUIRE NOTICE TO THE ENGINEER AND CITY BIOLOGIST A MINIMUM OF 21 DAYS PRIOR TO GROUND AND TREE DISTURBANCE IN THE VICINITY TO IDENTIFY AND DISMANTLE SPECIES OF CONCERN (WOODRAT MIDDENS). CONTRACTOR SHALL WORK WITH THE ENGINEER AND BIOLOGIST TO IDENTIFY THE MINIMUM WORK CORRIDOR AND MINIMIZE TREE TRIMMING AND REMOVAL AS NEEDED FOR CONSTRUCTION AND PROVIDE EXCLUSION FENCING FOR ALL AREAS IN THE VICINITY THAT CAN REMAIN UNDISTURBED DURING CONSTRUCTION.
4. CONTRACTOR TO POTHOLE (E) NEARBY UTILITIES, AND AREA AROUND (E) STRUCTURES PRIOR TO CONSTRUCTION.
5. INSTALL CUTOFF WALL EVERY 100 FEET FROM STA 390+00 TO STA 393+00, SEE DETAIL C305/TYP.
6. BUTT FUSION ELBOWS SHALL BE RADIUS ELBOWS (NOT MITERED ELBOWS).

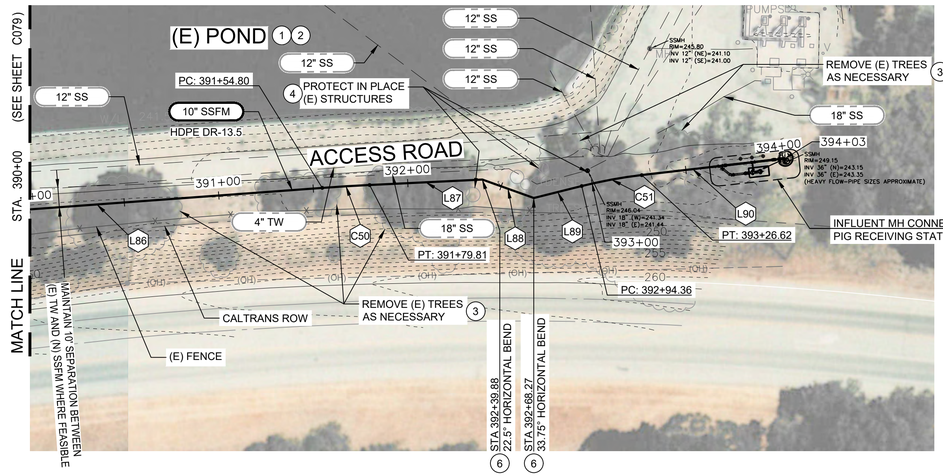

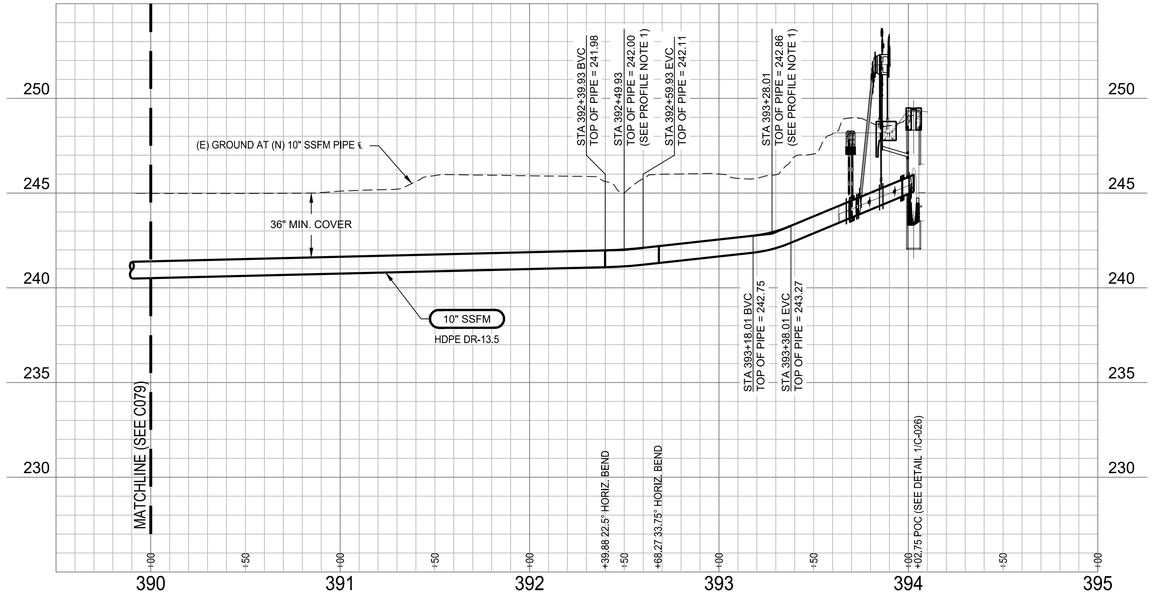

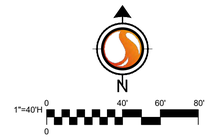

PLAN VIEW LEGEND

EXISTING PIPE — 8" SS

NEW PIPE — 10" SSFM

PROFILE NOTES

1. VERTICAL CURVES ARE WITHIN MANUFACTURER'S ALOWABLE PIPE DEFLECTION RADIUS (MINIMUM 62.7').

PROFILE LEGEND

SANITARY SEWER PIPE

HORIZONTAL BEND

1"=40'H 0 40' 60' 80'
1"=4'V 0 4 6 8

Revision	By	Appd.	YY.MM.DD
BID SET	KM	GIA	2022.12.30
PERMIT SET	KM	GIA	2022.10.10
Issued	By	Appd	YYYY.MM.DD

Permit/Seal

REGISTERED PROFESSIONAL ENGINEER GABRIEL I. ARONOW No.55807 Exp.12/31/24 CIVIL STATE OF CALIFORNIA

12/30/2022

Consultant

Stantec

Stantec Consulting Services Inc.
3875 Atherton Road
Rocklin CA 95765-3716
Tel: (916) 773-8100
www.stantec.com

Copyright Reserved
The Contractor shall verify and be responsible for all dimensions. DO NOT scale the drawing - any errors or omissions shall be reported to Stantec without delay. The Copyrights to all designs and drawings are the property of Stantec. Reproduction or use for any purpose other than that authorized by Stantec is forbidden.

Client/Project Logo

Client/Project

City of San Juan Bautista

SANITARY SEWER FORCE MAIN TO HOLLISTER PROJECT

San Juan Bautista, California

File Name: 31441-C071-C080 | AV Dwn. | KM, AV Dsgn. | GIA Chkd. | 2022.12.30 YYYY.MM.DD

Title

PLAN AND PROFILE
HOLLISTER WWTP ACCESS ROAD
STA. 390+00 TO 395+00

Project No. 184031441

Scale AS SHOWN

Revision 0

Sheet 71 of 128

Drawing No. C080

ORIGINAL SHEET - ANSI D

\\<\1MG\ca\hm\184031441\Gis\wrkg\cad\31441-c071-c080 2023.01.12 9:23:58 AM

HORIZONTAL CURVE TABLE

CURVE	DELTA	ARC LENGTH	RADIUS	CHORD DIRECTION	CHORD LENGTH	START POINT (N, E)	END POINT (N, E)
C1	004°02'41"	7.06'	100.00	N10°01'21"W	7.06'	2202183.41, 5817212.32	2202190.36, 5817211.09
C2	013°47'39"	36.11'	150.00	N18°56'31"W	36.03'	2202254.01, 5817197.51	2202288.09, 5817185.82
C3	000°05'20"	0.78'	500.00	N70°47'40"W	0.78'	2202380.60, 5816923.25	2202380.86, 5816922.52
C4	000°04'39"	0.68'	500.00	N36°57'41"W	0.68'	2202383.29, 5816919.19	2202383.83, 5816918.78
C5	002°21'37"	4.12'	100.00	N35°44'33"W	4.12'	2202540.20, 5816801.28	2202543.54, 5816798.87
C6	002°21'37"	4.12'	100.00	N10°52'55"W	4.12'	2202544.33, 5816798.53	2202548.38, 5816797.76
C7	006°10'46"	7.01'	65.00	N06°36'44"W	7.01'	2202768.31, 5816760.15	2202775.27, 5816759.35
C8	011°30'11"	13.05'	65.00	N09°16'26"W	13.03'	2202848.49, 5816754.84	2202861.35, 5816752.74
C9	011°55'41"	13.53'	65.00	N20°59'22"W	13.51'	2203189.84, 5816664.57	2203202.45, 5816659.73
C10	000°13'38"	3.97'	1000.00	N62°54'49"E	3.97'	2203628.44, 5816734.71	2203630.25, 5816738.24
C11	000°38'15"	11.12'	1000.00	N26°26'18"W	11.12'	2203967.85, 5817038.31	2203977.81, 5817033.36
C12	010°30'03"	366.54'	2000.00	N31°22'12"W	366.03'	2204378.49, 5816836.90	2204691.02, 5816646.35
C13	002°08'54"	37.50'	1000.00	N54°03'26"E	37.50'	2205029.09, 5816539.04	2205051.10, 5816569.40
C14	038°08'28"	109.84'	165.00	N73°45'54"E	107.82'	2206360.70, 5818457.68	2206390.85, 5818561.20
C15	026°34'35"	208.73'	450.00	S73°52'34"E	206.86'	2206335.57, 5819677.30	2206278.12, 5819876.02
C16	028°25'55"	347.36'	700.00	S74°48'15"E	343.81'	2204932.03, 5822263.78	2204841.91, 5822595.57
C17	015°00'00"	26.18'	100.00	N83°35'52"E	26.11'	2204769.19, 5826683.41	2204772.10, 5826709.36
C18	014°52'07"	25.95'	100.00	N83°31'56"E	25.88'	2204773.92, 5826716.68	2204776.83, 5826742.40
C19	000°17'37"	25.62'	5000.00	S89°10'50"E	25.62'	2204367.47, 5828050.25	2204367.11, 5828075.86
C20	000°12'55"	18.78'	5000.00	S89°13'11"E	18.78'	2204344.00, 5830044.15	2204343.74, 5830062.93
C21	000°07'55"	11.52'	5000.00	S89°10'41"E	11.52'	2204337.28, 5830479.54	2204337.12, 5830491.06
C22	000°16'57"	24.65'	5000.00	S89°23'07"E	24.65'	2204316.32, 5832067.70	2204316.05, 5832092.36
C23	000°28'49"	41.91'	5000.00	S00°42'49"W	41.91'	2204252.56, 5833039.58	2204210.65, 5833039.06
C24	000°19'36"	28.50'	5000.00	S00°47'26"W	28.50'	2203273.33, 5833023.46	2203244.83, 5833023.06
C25	000°06'22"	9.26'	5000.00	S89°19'11"E	9.26'	2201565.37, 5833085.09	2201565.26, 5833094.35
C26	000°15'59"	23.26'	5000.00	S89°08'00"E	23.26'	2201549.17, 5834350.79	2201548.82, 5834374.04
C27	000°15'28"	22.49'	5000.00	S89°07'45"E	22.49'	2201543.51, 5834678.71	2201543.16, 5834701.20
C28	000°11'56"	17.36'	5000.00	S89°21'26"E	17.36'	2201526.55, 5835984.04	2201526.35, 5836001.39
C29	000°08'07"	11.81'	5000.00	S89°23'21"E	11.81'	2201520.90, 5836576.74	2201520.77, 5836588.55
C30	000°03'06"	4.51'	5000.00	S89°20'50"E	4.51'	2201490.54, 5839140.96	2201490.49, 5839145.47
C31	000°03'56"	5.72'	5000.00	S89°20'25"E	5.72'	2201478.46, 5840244.89	2201478.40, 5840250.61
C32	002°59'33"	104.45'	2000.00	S87°48'41"E	104.44'	2201446.43, 5842895.42	2201442.44, 5842999.79
C33	001°31'14"	132.68'	5000.00	N04°26'42"E	132.68'	2201790.95, 5843043.57	2201923.23, 5843053.85
C34	001°01'36"	89.60'	5000.00	N04°41'31"E	89.59'	2202119.65, 5843071.74	2202208.95, 5843079.07
C35	040°11'52"	70.16'	100.00	S65°43'21"E	68.73'	2202978.99, 5843162.30	2202950.73, 5843224.95
C36	014°08'55"	34.57'	140.00	S38°32'57"E	34.48'	2202792.49, 5843386.67	2202765.52, 5843408.16
C37	031°53'33"	77.93'	140.00	S47°25'16"E	76.93'	2202592.85, 5843513.87	2202540.80, 5843570.52
C38	003°59'27"	34.83'	500.00	S65°21'46"E	34.82'	2202520.78, 5843610.45	2202506.26, 5843642.10
C39	030°33'37"	74.67'	140.00	S82°38'18"E	73.79'	2202476.93, 5843712.42	2202467.47, 5843785.61
C40	055°52'21"	97.52'	100.00	N54°08'43"E	93.70'	2202559.69, 5844448.62	2202614.58, 5844524.56
C41	003°41'10"	32.17'	500.00	S61°56'53"E	32.16'	2202743.41, 5844645.80	2202728.28, 5844674.18
C42	004°10'43"	36.47'	500.00	S62°11'40"E	36.46'	2202684.52, 5844750.30	2202667.52, 5844782.54
C43	012°51'24"	14.59'	65.00	S57°51'20"E	14.55'	2202650.99, 5844816.85	2202643.25, 5844829.18
C44	035°55'00"	40.75'	65.00	S69°23'08"E	40.08'	2202626.84, 5844849.75	2202612.73, 5844887.27
C45	003°38'40"	31.80'	500.00	S85°31'18"E	31.80'	2202610.43, 5844936.72	2202607.95, 5844968.42
C46	019°46'56"	69.05'	200.00	S73°48'30"E	68.71'	2202602.48, 5845017.94	2202583.32, 5845083.93
C47	044°00'41"	49.93'	65.00	S85°55'23"E	48.71'	2202542.10, 5845168.13	2202538.64, 5845216.72
C48	001°28'06"	19.22'	750.00	N72°48'20"E	19.22'	2202599.34, 5845404.30	2202605.02, 5845422.67
C49	012°15'31"	160.47'	750.00	N79°40'08"E	160.16'	2202642.13, 5845548.28	2202670.85, 5845705.84
C50	001°25'59"	25.01'	1000.00	N86°30'53"E	25.01'	2202688.33, 5845943.73	2202689.85, 5845968.69
C51	007°23'30"	32.25'	250.00	N79°40'38"E	32.23'	2202689.29, 5846080.70	2202695.07, 5846112.41

HORIZONTAL LINE TABLE

LINE	LENGTH	BEARING	START POINT (N, E)	END POINT (N, E)
L1	26.75'	N08°00'00"W	2202156.92, 5817216.04	2202183.41, 5817212.32
L2	65.08'	N12°02'41"W	2202190.36, 5817211.09	2202254.01, 5817197.51
L3	1.71'	N25°50'20"W	2202288.09, 5817185.82	2202289.63, 5817185.07
L4	277.17'	N70°50'20"W	2202289.63, 5817185.07	2202380.60, 5816923.25
L5	2.16'	N70°45'00"W	2202380.86, 5816922.52	2202381.57, 5816920.49
L6	2.16'	N37°00'00"W	2202381.57, 5816920.49	2202383.29, 5816919.19
L7	195.59'	N36°55'21"W	2202383.83, 5816918.78	2202540.20, 5816801.28
L8	0.44'	N34°33'44"W	2202543.54, 5816798.87	2202543.90, 5816798.63
L9	0.44'	N12°03'44"W	2202543.90, 5816798.63	2202544.33, 5816798.53
L10	223.12'	N09°42'07"W	2202548.38, 5816797.76	2202768.31, 5816760.15
L11	73.36'	N03°31'21"W	2202775.27, 5816759.35	2202848.49, 5816754.84
L12	340.11'	N15°01'32"W	2202861.35, 5816752.74	2203189.84, 5816664.57
L13	342.11'	N26°57'13"W	2203202.45, 5816659.73	2203507.40, 5816504.66
L14	5.00'	N18°01'38"E	2203507.40, 5816504.66	2203512.15, 5816506.21
L15	256.39'	N63°01'38"E	2203512.15, 5816506.21	2203628.44, 5816734.71
L16	321.48'	N62°48'00"E	2203630.25, 5816738.24	2203777.20, 5817024.17
L17	5.00'	N17°48'00"E	2203777.20, 5817024.17	2203781.96, 5817025.70
L18	106.98'	N26°45'26"W	2203781.96, 5817025.70	2203877.48, 5816977.53
L19	5.00'	N18°14'34"E	2203877.48, 5816977.53	2203882.23, 5816979.10
L20	86.10'	N63°14'34"E	2203882.23, 5816979.10	2203921.00, 5817055.98
L21	7.52'	N18°14'34"E	2203921.00, 5817055.98	2203928.13, 5817058.33
L22	44.48'	N26°45'25"W	2203928.13, 5817058.33	2203967.85, 5817038.31
L23	446.25'	N26°07'11"W	2203977.81, 5817033.36	2204378.49, 5816836.90
L24	330.98'	N36°37'13"W	2204691.02, 5816646.35	2204956.66, 5816448.92
L25	5.04'	N07°51'47"E	2204956.66, 5816448.92	2204961.65, 5816449.61
L26	112.01'	N52°58'59"E	2204961.65, 5816449.61	2205029.09, 5816539.04
L27	1726.59'	N55°07'53"E	2205051.10, 5816569.40	2206038.18, 5817986.01
L28	5.00'	N10°07'53"E	2206038.18, 5817986.01	2206043.10, 5817986.89
L29	12.38'	N34°52'07"W	2206043.10, 5817986.89	2206053.26, 5817979.81
L30	5.01'	N10°04'27"E	2206053.26, 5817979.81	2206058.19, 5817980.69
L31	52.93'	N55°04'27"E	2206058.19, 5817980.69	2206088.49, 5818024.08
L32	5.00'	S79°55'33"E	2206088.49, 5818024.08	2206087.62, 5818029.00
L33	21.35'	S34°55'33"E	2206087.62, 5818029.00	2206070.11, 5818041.23
L34	4.97'	S79°55'33"E	2206070.11, 5818041.23	2206069.24, 5818046.12
L35	504.31'	N54°41'40"E	2206069.24, 5818046.12	2206360.70, 5818457.68
L36	1117.46'	S87°09'52"E	2206390.85, 5818561.20	2206335.57, 5819677.30
L37	2741.05'	S60°35'17"E	2206278.12, 5819876.02	2204932.03, 5822263.78
L38	2730.71'	S89°01'12"E	2204841.91, 5822595.57	2204795.21, 5825325.88
L39	1357.78'	S88°54'08"E	2204795.21, 5825325.88	2204769.19, 5826683.41
L40	7.55'	N76°05'52"E	2204772.10, 5826709.36	2204773.92, 5826716.68
L41	957.37'	S89°02'01"E	2204776.83, 5826742.40	2204760.69, 5827699.63
L42	35.46'	S44°02'01"E	2204760.69, 5827699.63	2204735.19, 5827724.28
L43	358.63'	S00°57'59"W	2204735.19, 5827724.28	2204376.61, 5827718.23
L44	5.00'	S44°02'01"E	2204376.61, 5827718.23	2204373.02, 5827721.70
L45	328.59'	S89°02'01"E	2204373.02, 5827721.70	2204367.47, 5828050.25

HORIZONTAL LINE TABLE

LINE	LENGTH	BEARING	START POINT (N, E)	END POINT (N, E)
L46	1968.42'	S89°19'38"E	2204367.11, 5828075.86	2204344.00, 5830044.15
L47	416.66'	S89°06'43"E	2204343.74, 5830062.93	2204337.28, 5830479.54
L48	1576.78'	S89°14'39"E	2204337.12, 5830491.06	2204316.32, 5832067.70
L49	944.18'	S89°31'36"E	2204316.05, 5832092.36	2204308.25, 5833036.51
L50	5.00'	S44°31'36"E	2204308.25, 5833036.51	2204304.69, 5833040.01
L51	52.13'	S00°28'24"W	2204304.69, 5833040.01	2204252.56, 5833039.58
L52	937.45'	S00°57'13"W	2204210.65, 5833039.06	2203273.33, 5833023.46
L53	1675.15'	S00°37'38"W	2203244.83, 5833023.06	2201569.78, 5833004.73
L54	5.00'	S44°22'22"E	2201569.78, 5833004.73	2201566.21, 5833008.22
L55	76.87'	S89°22'22"E	2201566.21, 5833008.22	2201565.37, 5833085.09
L56	1256.54'	S89°16'00"E	2201565.26, 5833094.35	2201549.17, 5834350.79
L57	304.71'	S89°00'01"E	2201548.82, 5834374.04	2201543.51, 5834678.71
L58	1282.95'	S89°15'29"E	2201543.16, 5834701.20	2201526.55, 5835984.04
L59	575.37'	S89°27'24"E	2201526.35, 5836001.39	2201520.90, 5836576.74
L60	2552.60'	S89°19'17"E	2201520.77, 5836588.55	2201490.54, 5839140.96
L61	1099.48'	S89°22'23"E	2201490.49, 5839145.47	2201478.46, 5840244.89
L62	2645.00'	S89°18'27"E	2201478.40, 5840250.61	2201446.43, 5842895.42
L63	17.75'	S86°18'55"E	2201442.44, 5842999.79	2201441.30, 5843017.50
L64	5.00'	N48°41'05"E	2201441.30, 5843017.50	2201444.60, 5843021.26
L65	347.06'	N03°41'05"E	2201444.60, 5843021.26	2201790.95, 5843043.57
L66	197.24'	N05°12'19"E	2201923.23, 5843053.85	2202119.65, 5843071.74
L67	770.53'	N04°10'43"E	2202208.95, 5843079.07	2202977.43, 5843135.22
L68	5.00'	N49°10'43"E	2202977.43, 5843135.22	2202980.69, 5843139.00
L69	23.36'	S85°49'17"E	2202980.69, 5843139.00	2202978.99, 5843162.30
L70	226.26'	S45°37'25"E	2202950.73, 5843224.95	2202792.49, 5843386.67
L71	202.46'	S31°28'30"E	2202765.52, 5843408.16	2202592.85, 5843513.87
L72	44.67'	S63°22'03"E	2202540.80, 5843570.52	2202520.78, 5843610.45
L73	76.19'	S67°21'30"E	2202506.26, 5843642.10	2202476.93, 5843712.42
L74	669.40'	N82°04'53"E	2202467.47, 5843785.61	2202559.69, 5844448.62
L75	165.59'	N26°12'32"E	2202614.58, 5844524.56	2202763.15, 5844597.70
L76	5.00'	N71°12'32"E	2202763.15, 5844597.70	2202764.76, 5844602.43
L77	48.34'	S63°47'28"E	2202764.76, 5844602.43	2202743.41, 5844645.80
L78	87.79'	S60°06'18"E	2202728.28, 5844674.18	2202684.52, 5844750.30
L79	38.08'	S64°17'02"E	2202667.52, 5844782.54	2202650.99, 5844816.85
L80	26.32'	S51°25'38"E	2202643.25, 5844829.18	2202626.84, 5844849.75
L81	49.50'	S87°20'38"E	2202612.73, 5844887.27	2202610.43, 5844936.72
L82	49.83'	S83°41'58"E	2202607.95, 5844968.42	2202602.48, 5845017.94
L83	93.75'	S63°55'02"E	2202583.32, 5845083.93	2202542.10, 5845168.13
L84	197.16'	N72°04'16"E	2202538.64, 5845216.72	2202599.34, 5845404.30
L85	130.98'	N73°32'23"E	2202605.02, 5845422.67	2202642.13, 5845548.28
L86	238.53'	N85°47'54"E	2202670.85, 5845705.84	2202688.33, 5845943.73
L87	59.57'	N87°13'53"E	2202689.85, 5845968.69	2202692.73, 5846028.19
L88	28.89'	S70°16'07"E	2202692.73, 5846028.19	2202682.97, 5846055.39
L89	26.09'	N75°58'53"E	2202682.97, 5846055.39	2202689.29, 5846080.70
L90	76.13'	N83°22'23"E	2202695.07, 5846112.41	2202703.85, 5846188.03

ORIGINAL SHEET - ANSI D

\\1JMD\Confirm\184031441\Mitmeng\oct13\31441-C081
2023.01.12 9:25:49 AM

Revision	By	Appd.	YY.MM.DD

Issued	By	Appd	YYYY.MM.DD
BID SET	KM	GIA	2022.12.30
PERMIT SET	KM	GIA	2022.10.10

Permit/Seal

REGISTERED PROFESSIONAL ENGINEER
GABRIEL I. ARONOW
No. 55607
Exp.12/31/24
CIVIL
STATE OF CALIFORNIA

12/30/2022

Consultant

Stantec

Stantec Consulting Services Inc.
3875 Atherton Road
Rocklin CA 95765-3716
Tel: (916) 773-8100
www.stantec.com

Copyright Reserved

The Contractor shall verify and be responsible for all dimensions. DO NOT scale the drawing - any errors or omissions shall be reported to Stantec without delay. The Copyrights to all designs and drawings are the property of Stantec. Reproduction or use for any purpose other than that authorized by Stantec is forbidden.

Client/Project Logo

Client/Project

City of San Juan Bautista

SANITARY SEWER FORCE MAIN
TO HOLLISTER PROJECT

San Juan Bautista, California

File Name: 31441-C081	AMV	AMV	GIA	2022.12.30
	Dwn.	Dsgn.	Chkd.	YYYY.MM.DD

Title

NEW SSFM ALIGNMENT
CURVE AND LINE TABLES

Project No.	Scale
184031441	AS SHOWN
Revision	Sheet
0	72 of 128

Drawing No.

C081

ABBREVIATIONS:

ADDL	ADDITIONAL
AB	AGGREGATE BASE, ANCHOR BOLT
AC	ASPHALT CONCRETE
ACP	ASBESTOS CEMENT PIPE
AL	ALUMINUM
ALT	ALTERNATE
APPROX	APPROXIMATE (LY)
ARCH	ARCHITECTURAL
@	AT
BETW	BETWEEN
BEV	BEVELED
BLKG	WOOD BLOCKING
BOT	BOTTOM
BRG	BEARING
BLDG	BUILDING
BF	BOTTOM OF FOOTING
B/W	BACK OF WALL
BIT CTD	BITUMINOUS COATED
CHK PL	CHECKERED PLATE
CLR	CLEAR
CL	CENTER LINE
CLSM	CONTROLLED LOW STRENGTH MATERIAL
CC	CENTER TO CENTER
CMU	CONCRETE MASONRY UNIT
COL	COLUMN
CONC	CONCRETE
CJ	CONSTRUCTION JOINT
CONT	CONTINOUS
CT J	CONTROL JOINT
CR J	CONTRACTION JOINT
CIP	CAST-IN-PLACE
CIDH	CAST-IN-DRILLED-HOLE
CTR	CENTER (ED)
CG	CENTER OF GRAVITY
CONST	CONSTRUCTION
COORD	COORDINATE
CSK	COUNTER SINK
CAB	CRUSHED AGGREGATE BASE
CAP	CORRUGATED ALUMINUM PIPE
D	DEPTH
db	BAR DIAMETER
DF	DOUGLAS FIR
DEMO	DEMOLITION
DIA	DIAMETER
DIM	DIMENSION
DN	DOWN
DWG	DRAWING
DL	DEAD LOAD
DIST	DISTANCE
DD	DOWN DRAIN
DIAPH	DIAPHRAGM
DSA	DIVISION OF STATE ARCHITECT
EXIST, (E)	EXISTING
EA	EACH
EF	EACH FACE
EJ	EXPANSION JOINT
EL, ELEV	ELEVATION
EQ	EQUAL
EQUIP	EQUIPMENT
EXT	EXTERIOR
EMBED	EMBEDMENT
EN	EDGE NAILING
ES	EACH SIDE
EW	EACH WAY
ENGR	ENGINEER, ENGINEERING
EXC	EXCAVATION
EXP	EXPANSION
FAB	FABRICATE
F & I	FURNISH AND INSTALL
FB	FACE OF BLOCK
FC	FACE OF CONCRETE
FD	FLOOR DRAIN
FF	FINISHED FLOOR, FACE OF FRAMING
FDN	FOUNDATION
FG	FINISHED GRADE
FS	FINISHED SURFACE, FACE OF STUD
F/S	FAR SIDE
FLG	FLANGE
FN	FIELD NAILING
FTG	FOOTING
FW	FACE OF WALL
FT	FEET (FOOT)
GA	GAGE
GAF	GALVANIZE AFTER FABRICATION
GALV	GALVANIZED
GS	GALVANIZED STEEL
GR	GUARD RAILING, GRADE
GTR	GUTTER
GRTG	GRATING
GSP	GALVANIZED STEEL PIPE
H	HIGH OR HEIGHT
HA	HEADED ANCHOR
HR	HANDRAIL
HSB	HIGH STRENGTH BOLT
HORIZ	HORIZONTAL
HW	HEAD WALL
HS	HIGH STRENGTH

ABBREVIATIONS (Continued):

ID	INSIDE DIAMETER
INCL	INCLUDING
INSP	INSPECTION
INV	INVERT
IE	INVERT ELEVATION
IF	INSIDE FACE
IN	INCH
JT	JOINT
JCT	JUNCTION
KP	KICK PLATE
KIPS	KILO POUNDS
L	LENGTH
LS	LAG SCREW
LAT	LATERAL
LB	POUND
LF	LINEAR FOOT
LL	LIVE LOAD
LT	LEFT
LONG	LONGITUDE
LONGIT	LONGITUDINAL
LTS	LIME TREATED SOIL
MANUF	MANUFACTURER
MAX	MAXIMUM
MB	MACHINE BOLT
MECH	MECHANICAL
MIN	MINIMUM
MPH	MILES PER HOUR
MISC	MISCELLANEOUS
(N)	NEW
NS	NON-SHRINK
N/S	NEAR SIDE
NTS	NOT TO SCALE
NO., NOS	NUMBER, NUMBERS
OC	ON CENTER
OD	OUTSIDE DIAMETER
OF	OUTSIDE FACE
OG	ORIGINAL GROUND
OE	OUTER EDGE
OH	OVERHEAD, OPPOSITE HAND
OPNG	OPENING
OPP	OPPOSITE
O-O	OUT TO OUT
PVMT	PAVEMENT
PL	PLATE
PREFAB	PREFABRICATED
PSI	POUNDS PER SQUARE INCH
P/S	PRESTRESSED
R	RADIUS
REINF	REINFORCEMENT
RC	REINFORCED CONCRETE
RCB	REINFORCED CONCRETE BOX
RCE	REGISTERED CIVIL ENGINEER
RET	RETAINING
RT	RIGHT
REQD	REQUIRED
SEC	SECTION
SF	SQUARE FOOT
SIM	SIMILAR
SPEC	SPECIFICATIONS
SHT	SHEET
STR	STRUCTURE/STRUCTURAL
SG	SUBGRADE
STD	STANDARD
SOG	SLAB ON GRADE
SP	STRUCTURAL PLYWOOD
SS	STAINLESS STEEL
SSB	STAINLESS STEEL BOLT
ST	STEEL
STIFF	STIFFENER
STAG	STAGGERED
STIR	STIRRUPS
SQ	SQUARE
SYMM	SYMMETRICAL
T & B	TOP AND BOTTOM
TF	TOP OF FOOTING
TOB	TOP OF BLOCK
TOC	TOP OF CONCRETE
TOG	TOP OF GRATING
TOS	TOP OF STEEL
TS	TUBE STEEL
TOW	TOP OF WALL
TYP	TYPICAL
TEMP	TEMPORARY
UG	UNDER GROUND
UNO (UON)	UNLESS NOTED OTHERWISE
VERT	VERTICAL
VOL	VOLUME
W	WIDTH
WS	WATERSTOP
WP	WORKING POINT
WH	WEEP HOLE
WM	WIRE MESH
WSP	WELDED STEEL PIPE
WWF	WELDED WIRE FABRIC
W/	WITH
W/O	WITHOUT

INSPECTION / OBSERVATION NOTES:

A. SPECIAL INSPECTIONS:

GENERAL: IN ADDITION TO THE INSPECTIONS REQUIRED BY 110 OF THE 2019 CBC, THE OWNER SHALL EMPLOY A SPECIAL INSPECTOR DURING CONSTRUCTION ON THE FOLLOWING TYPES OF WORK. ALL INSPECTIONS SHALL BE PREFORMED IN ACCORDANCE WITH CHAPTER 17 OF THE 2019 CBC. REFER TO CHAPTER 17 FOR ADDITIONAL REQUIREMENTS OF THE SPECIAL INSPECTOR.

- ☑ 1. CONCRETE: DURING THE TAKING OF TEST SPECIMENS AND PLACING OF ALL REINFORCED CONCRETE.
- ☑ 2. REINFORCING STEEL:
  - a. DURING THE PLACING OF REINFORCING STEEL, FOR ALL STRUCTURAL CONCRETE
  - b. DURING THE PLACEMENT OF ALL CONCRETE INSERTS.
- ☑ 3. WELDING: DURING ALL STRUCTURAL WELDING INCLUDING WELDING OF REINFORCING STEEL. SUBMIT FIELD WELDERS CERTIFICATE TO THE DSA APPROVED WELDING INSPECTOR FOR APPROVAL PRIOR TO THE START OF WELDING.
- ☑ 4. HIGH STRENGTH BOLTING: IN ACCORDANCE WITH IBC REQUIREMENTS.
- ☐ 5. STRUCTURAL MASONRY: IN ACCORDANCE WITH IBC REQUIREMENTS.
- ☑ 6. PILING, DRILLED PIERS AND CAISSIONS: DURING DRIVING AND TESTING OF PILES AND CONSTRUCTION OF CAST-IN-PLACE DRILLED PILES AND CAISSIONS.
- ☐ 7. SHOTCRETE: DURING THE TAKING OF TEST SPECIMENS AND PLACING OF SHOTCRETE PER IBC REQUIREMENTS.
- ☐ 8. GLULAM FABRICATION INSPECTION PER 2337A.1.
- ☑ 9. A REPRESENTATIVE OF THE ENGINEER OF RECORD SHALL BE PRESENT DURING THE GRADING, EXCAVATION AND FOUNDATION CONSTRUCTION.
- ☑ 10. ADHESIVE ANCHOR INSTALLATION: PERFORM SPECIAL INSPECTION IN ACCORDANCE WITH THE REQUIREMENTS OF THE IBC. THE SPECIAL INSPECTOR MUST RECORD PRODUCT DESCRIPTION (INCLUDING PRODUCT NAME), ADHESIVE EXPIRATION DATE, CONCRETE TYPE AND STRENGTH, ANCHOR DIAMETER AND STEEL GRADE, COMPLIANCE OF DRILL BIT WITH THE ICC-ES REPORT, HOLE DIAMETER AND LOCATION, CLEANLINESS OF HOLE AND ANCHOR, ADHESIVE APPLICATION, AND ANCHOR EMBEDMENT.

B. STRUCTURAL OBSERVATIONS:

THE STRUCTURAL ENGINEER SHALL MAKE VISITS TO THE SITE TO OBSERVE GENERAL COMPLIANCE WITH THE APPROVED STRUCTURAL PLANS, SPECIFICATIONS AND CHANGE ORDERS. THE ENGINEER SHALL SUBMIT A STATEMENT IN WRITING TO THE BUILDING OFFICIAL STATING THE SITE VISITS HAVE BEEN MADE AND THAT ANY DEFICIENCIES NOTED HAVE BEEN CORRECTED.

- ☑ 1. OBSERVE FOUNDATION EXCAVATIONS AND REINFORCEMENT PLACEMENT PRIOR TO THE PLACING OF CONCRETE. PROVIDE 48 HR. NOTICE.
- ☐ 2. OBSERVE EDGE NAILING ON PLYWOOD SHEAR WALLS AND ROOFS.
- ☐ 3. OBSERVE THE CONNECTION OF SEISMIC TIES, STRAPS AND CONNECTORS.
- ☑ 4. PERFORM ADDITIONAL OBSERVATIONS, IF REQUIRED IN THE OPINION OF THE STRUCTURAL ENGINEER.

GENERAL NOTES:

1. TYPICAL STRUCTURAL DETAILS AND NOTES SHALL APPLY TO ALL "S" SHEETS UNLESS OTHERWISE SHOWN OR NOTED ON PLANS.
2. DETAILS OF CONSTRUCTION NOT FULLY SHOWN SHALL BE OF THE SAME NATURE AS SHOWN FOR SIMILAR CONDITION.
3. CONSTRUCTION SHALL CONFORM TO ALL APPLICABLE CODES AND REGULATIONS.
4. PRIOR TO FABRICATION, SHOP DRAWINGS SHALL BE SUBMITTED FOR REVIEW BY THE ENGINEER ON ALL STRUCTURAL STEEL, METAL DECK, STRUCTURAL ALUMINUM, REINFORCING STEEL, CONST. JT. LAYOUT AND CONCRETE MIX DESIGN. SHOP DRAWINGS: CONTRACTOR AGREES THAT SHOP DRAWING SUBMITTALS PROCESSED BY THE ENGINEER ARE NOT CHANGE ORDERS AND THAT THE PURPOSE OF SHOP DRAWING SUBMITTALS BY THE CONTRACTOR IS TO DEMONSTRATE TO THE ENGINEER THAT THE CONTRACTOR UNDERSTANDS THE DESIGN CONCEPT BY INDICATING WHICH MATERIAL HE INTENDS TO FURNISH AND INSTALL AND BY DETAILING THE FABRICATION AND INSTALLATION METHODS HE INTENDS TO USE.
5. SAFETY NOTE: IT IS THE CONTRACTOR'S RESPONSIBILITY TO COMPLY WITH ALL OSHA REQUIREMENTS AS THEY APPLY TO THIS PROJECT. THE ENGINEER AND THE OWNER DO NOT ACCEPT ANY RESPONSIBILITY FOR THE CONTRACTOR'S FAILURE TO COMPLY WITH THESE REQUIREMENTS. THE CONTRACTOR SHALL BE RESPONSIBLE FOR ADEQUATE DESIGN AND CONSTRUCTION OF ALL FORMS AND SHORING REQUIRED.
6. CONTRACTOR SHALL VERIFY ALL DIMENSIONS, ELEVATIONS, PROPERTY LINES, ETC. ON THE JOB.
7. CONTRACTOR SHALL NOTIFY THE ENGINEER WHERE A CONFLICT OCCURS ON ANY OF THE CONTRACT DRAWINGS OR DOCUMENTS. CONTRACTOR IS NOT TO ORDER MATERIAL OR CONSTRUCT ANY PORTION OF STRUCTURES THAT IS IN CONFLICT UNTIL CONFLICT IS RESOLVED WITH THE AFFECTED PARTIES.
8. MECHANICAL AND ELECTRICAL EQUIPMENT SUPPORTS, ANCHORAGES, OPENINGS, RECESSES AND REVEALS NOT SHOWN ON THE STRUCTRUAL DRAWINGS, BUT REQUIRED BY OTHER CONTRACT DRAWINGS SHALL BE PROVIDED. OPENINGS THROUGH NEW AND EXISTING WALLS AND SLABS FOR PIPES, DUCTS CONDUITS, ETC. ARE NOT ALL SHOWN ON THE STRUCTURAL DRAWINGS. CONTRACTOR SHALL PROVIDE THESE OPENINGS IN ACCORDANCE WITH THE CONTRACT DOCUMENTS. REINFORCEMENT AROUND OPENINGS IN NEW WALLS AND SLABS SHALL BE AS SHOWN IN THE TYPICAL DETAILS UNLESS OTHERWISE SHOWN.
9. CONTRACTOR SHALL VERIFY MECHANICAL AND ELECTRICAL PLANS FOR THE LOCATION OF EQUIPMENT.

CONSTRUCTION LOADS:

STRUCTURES HAVE BEEN DESIGNED FOR OWNER'S OPERATIONAL LOADS ON THE FINISHED STRUCTURES. DURING CONSTRUCTION, THE CONTRACTOR IS RESPONSIBLE FOR PROTECTING AND BRACING THE STRUCTURES AND BALANCING WHEREVER EXCESSIVE CONSTRUCTION LOADS MAY OCCUR. BACKFILL SHALL BE PLACED AROUND STRUCTURES SYMMETRICALLY AND UNIFORMLY SO THAT LOADS AGAINST STRUCTURES ARE INTRODUCED IN BALANCE. LIQUID-CONTAINING STRUCTURES SHALL BE TESTED FOR WATER-TIGHTNESS BEFORE BACKFILLING – SEE SPECS.

CONCRETE AND REINFORCING STEEL:

1. CONCRETE CONSTRUCTION SHALL CONFORM TO ACI 318-14 AND ACI CODE OF STANDARD PRACTICE.
2. SEE SPECIFICATIONS FOR REQUIREMENTS.
3. CEMENT SHALL CONFORM TO ASTM C-150, TYPE II, MODIFIED/TYPE V.
4. CONCRETE AGGREGATES: NATURAL SAND AND ROCK AGGREGATES CONFORMING TO ASTM C-33.
5. REINFORCING SHALL CONFORM TO ASTM A706 GRADE 60 OR 70, EXCEPT #3 & #4 STIRRUPS AND TIES MAY BE GRADE40.
6. WELDING OF REINFORCING STEEL SHALL CONFORM TO AWS D1.4 USING PROPER LOW HYDROGEN ELECTRODES. TACK WELDING TO REBAR IS STRICTLY PROHIBITED. SEE "REBAR WELDING".
7. REINFORCING STEEL SHALL BE DETAILED, FABRICATED, AND INSTALLED ACCORDING TO "MANUAL OF STANDARD PRACTICE FOR REINFORCED CONCRETE CONSTRUCTION" BY CRSI.
8. WIRE FABRIC SHALL CONFORM TO ASTM A-185.
9. DIMENSIONS SHOWN FOR LOCATION OF REINFORCING ARE TO THE FACE OF MAIN BARS AND DENOTE CLEAR COVERAGE. UNLESS OTHERWISE NOTED, CLEAR COVERAGE SHALL BE AS FOLLOWS:
   - CONCRETE DEPOSITED DIRECTLY AGAINST GROUND (EXCEPT SLABS) . . . . . 3"
   - FORMED CONCRETE EXPOSED TO WEATHER OR GROUND OR LIQUID
   - #6 AND LARGER . . . . . 2"
   - #5 AND SMALLER . . . . . 1½"
   - BEAMS (TOP BARS) . . . . . 2"
   - BEAMS (ALL OTHER MAIN REINFORCING) . . . . . 2"
   - COLUMN MAIN REINFORCING . . . . . 2"
   - SLABS ON GROUND WITH ONE LAYER OF REINFORCEMENT . . . . . POSITION IN CENTER OF SLAB
10. A) UNLESS OTHERWISE NOTED ALL BARS SHOWN WITH LAPS OR SPLICES SHALL HAVE CLASS 'B' LAP LENGTH. SEE TABLE BELOW .

CLASS 'B' LAP LENGTH		
BAR SIZE	OTHER	TOP *
#3	1'-7"	2'-0"
#4	2'-1"	2'-8"
#5	2'-7"	3'-4"
#6	3'-1"	4'-0"
#7	4'-6"	5'-11"
#8	5'-2"	6'-9"
#9	5'-10"	7'-7"
#10	6'-7"	8'-6"
#11	7'-3"	9'-6"

* TOP REINFORCING IS HORIZONTAL REINFORCEMENT THAT HAS MORE THAN 12" OF CONCRETE PLACED BELOW IT.

   B) DOWEL ALL VERTICAL REBARS IN WALLS AND COLUMNS FROM FOUNDATION WITH SAME SIZE AND SPACING AS WALL VERTICAL BAR U.N.O.
   C) SPLICES IN ADJACENT HORIZ. BARS SHALL BE STAGGERED NOT LESS THAN 5'-0" APART.
   D) SPLICE CONTINUOUS BARS IN SOIL-BEARING GRADE BEAMS AS FOLLOWS: BOTTOM BARS AT MID-SPAN, TOP BARS AT CENTERLINE OF SUPPORT, UNLESS NOTED OTHERWISE.
   E) SPLICE CONTINUOUS BARS IN BEAMS, SPANDRELS, WALL BEAMS ETC. AS FOLLOWS: BOTTOM BARS AT CENTERLINE OF SUPPORT, TOP BARS AT MIDSPAN, UNLESS NOTED OTHERWISE.
   F) REINFORCING BARS SHALL BE RUN IN A MANNER THAT FORMS A CONTINUOUS SYSTEM OF BARS TYING ALL PARTS OF THE STRUCTURE TOGETHER. EXTEND ALL REINFORCING BARS AS FAR AS POSSIBLE IN EACH CONCRETE MEMBER AND TERMINATE BAR W/ 90° STD. HOOK TO 2" OF CONCRETE COVER OVER END OF HOOK. FACE OR BEND.
   G) BEAM STIRRUPS AND COLUMN TIES SHALL HOOK 135 DEGREES AROUND A CORNER BAR UNLESS NOTED OTHERWISE.

11. GENERAL:
   A) NO PIPES OR DUCTS SHALL BE PLACED IN CONCRETE SLABS, BEAMS, WALLS OR GRADE BEAMS UNLESS SPECIFICALLY DETAILED.
   B) REFER TO ARCHITECTURAL, STRUCTURAL, ELECTRICAL AND MECHANICAL DRAWINGS FOR ALL OPENINGS, FLANGES, MOULDS, GROOVES, CLIPS AND GROUNDS TO BE CAST IN CONCRETE.
12. CONSTRUCTION JOINTS SHALL BE MADE ROUGH AND ALL LAITANCE REMOVED FROM THE SURFACE. CONCRETE MAY BE ROUGHENED BY CHIPPING THE ENTIRE SURFACE, SANDBLASTING, OR HOSING THE SURFACE 4 TO 6 HOURS AFTER THE POUR WITH A FINE SPRAY.
13. REMOVE ALL DEBRIS FROM THE FORMS BEFORE PLACING ANY CONCRETE.
14. REINFORCING, DOWELS, BOLTS, ANCHORS, SLEEVES, ETC. TO BE EMBEDDED IN CONCRETE SHALL BE SECURELY POSITIONED BEFORE PLACING CONCRETE. OBTAIN APPROVAL OF ALL AFFECTED TRADES PRIOR TO PLACING CONCRETE.
15. MAXIMUM FREE FALL OF CONCRETE SHALL BE 4'-0".
16. CONCRETE FOR WALLS SHALL BE PLACED SO THAT NO PART OF THE LIFT IS MORE THAN 2 FT. HIGHER THAN ANY OTHER PART.
17. CONCRETE IN WALLS, PIERS, OR COLUMNS SHALL SET AT LEAST 2 HOURS BEFORE PLACING CONCRETE IN BEAMS, SPANDRELS, OR SLABS SUPPORTED THEREON.
18. REINFORCE ALL SLABS ON GRADE AS SHOWN ON DRAWINGS.
19. USE #2 SPREADERS APPROXIMATELY EVERY THIRD INTERSECTION EACH DIRECTION FOR ALL DOUBLE LAYER WALLS. PLACE SPREADERS IN VERTICAL LINES WITH FORM TIES.
20. NO WOOD SPREADERS ARE ALLOWED. NO WOOD STAKES ARE ALLOWED IN AREAS TO BE CONCRETED.
21. CONCRETE MIX DESIGN SHALL BE SUBMITTED FOR ENGINEER'S REVIEW PRIOR TO PLACING CONCRETE.
22. NOTIFY THE ENGINEER 48 HOURS PRIOR TO PLACING CONCRETE.
23. SPACING OF CONST. JOINTS IN WALLS AND SLABS IS 30 FT. MAXIMUM EA. WAY; LENGTH OF WALL POUR FROM CORNER IS 20 FT. MAXIMUM; MAXIMUM AREA OF ONE POUR IS 900 SF. U.N.O. SUBMIT SHOP DRAWINGS FOR APPROVAL.
24. EXCEPT AS OTHERWISE REQUIRED, EXPOSED CONCRETE CORNERS AND EDGES SHALL HAVE 3/4" CHAMFERS. RE ENTRANT CORNERS SHALL NOT HAVE FILLETS.
25. POST INSTALLED ANCHORS AS APPROVED BY ICC-ES FOR THE USE IN CRACKED CONCRETE SHALL BE USED. THE DESIGN SHALL BE IN ACCORDANCE WITH CHAPTER-17 OF ACI 318-14. PROVIDE ICC-ES REPORT FOR ENGINEERS APPROVAL.
26. IF EXPANSION JOINTS ARE GOING TO BE USED, THEY WILL BE SHOWN ON CONSTRUCTION DRAWINGS.

Revision	By	Appd.	YY.MM.DD

Issued	By	Appd	YYYY.MM.DD
BID SET	KM	GIA	2022.08.01

Permit/Seal

REGISTERED PROFESSIONAL ENGINEER — STATE OF CALIFORNIA — No. S8431 — Exp.6-30-24 — STRUCTURAL

08/01/2022

Consultant

Stantec

Stantec Consulting Services Inc.
3875 Atherton Road
Rocklin CA 95765-3716
Tel:(916) 773-8100
www.stantec.com

Copyright Reserved

The Contractor shall verify and be responsible for all dimensions. DO NOT scale the drawing - any errors or omissions shall be reported to Stantec without delay. The Copyrights to all designs and drawings are the property of Stantec. Reproduction or use for any purpose other than that authorized by Stantec is forbidden.

Client/Project Logo

Client/Project

City of San Juan Bautista

SANITARY SEWER FORCE MAIN TO HOLLISTER PROJECT

San Juan Bautista, California

File Name: 31441-S001 & S002	ASB	SDS	SDS	2022.08.01
	Dwn.	Dsgn.	Chkd.	YYYY.MM.DD

Title

STRUCTURAL TYPICAL NOTES

Project No.	Scale
184031441	NONE

Revision	Sheet	Drawing No.
0	73 of 128	S001

ORIGINAL SHEET - ANSI D

\\1 SMD\office\184031441\dwg\cct\31441-s001 & s002
2022.07.21 12:59:41 PM

WATER STOPS FOR CONCRETE CONSTRUCTION:

1. ALL WATER STOPS SHALL BE INSTALLED ACCORDING TO THE MANUFACTURER'S SPECIFICATIONS TO GIVE A WATERTIGHT JOINT.
2. WATER STOPS SHALL BE CAREFULLY POSITIONED IN PLACE AND SUPPORTED AS REQUIRED TO REMAIN IN PLACE DURING OPERATIONS.
3. WATERSTOPS MUST BE USED AT ALL CONSTRUCTION JOINTS IN LIQUID CONTAINING STRUCTURES.

REBAR WELDING:

ALL REBAR TO BE WELDED SHALL BE CONTINUOUSLY INSPECTED BY A QUALIFIED LABORATORY APPROVED BY THE BUILDING OFFICIAL OF LOCAL JURISDICTION. CONTRACTOR MUST FURNISH TO THE LABORATORY MILL CERTIFICATES SHOWING CHEMICAL ANALYSIS. ALL PREHEATING AND WELDING SHALL BE DONE IN ACCORDANCE WITH AWS D1.4 STANDARDS (LATEST EDITION).

STRUCTURAL STEEL:

1. FABRICATION, ERECTION AND MATERIALS SHALL CONFORM WITH THE CURRENT AISC SPECIFICATION FOR THE DESIGN, FABRICATION AND ERECTION OF STRUCTURAL STEEL FOR BUILDINGS AND 2019 CALIFORNIA BUILDING CODE.
2. W, WT STRUCTURAL SECTIONS SHALL CONFORM TO A992 GRADE 50. CHANNELS, ANGLES AND MISCELLANEOUS STRUCTURAL STEEL SHALL CONFORM TO ASTM A-36 UNO.
3. PIPE COLUMNS SHALL CONFORM TO ASTM A53, TYPE E OR S, GRADE B.
4. TUBE COLUMNS SHALL CONFORM TO ASTM A500, GRADE B.
5. WELDING SHALL BE DONE BY THE ELECTRIC ARC PROCESS IN ACCORDANCE WITH "AWS" STANDARDS, USING ONLY CERTIFIED WELDERS. ALL BUTT WELDS SHALL HAVE COMPLETE PENETRATION. ALL EXPOSED BUTT WELDS SHALL BE GROUND.
6. PLACE NON-SHRINK GROUT UNDER ALL BEARINGS ON CONCRETE OR MASONRY BEFORE ADDING VERTICAL LOAD.
7. ALL STRUCTURAL STEEL SHALL BE ERECTED PLUMB AND TRUE TO LINE. TEMPORARY BRACING SHALL BE INSTALLED AND SHALL BE LEFT IN PLACE UNTIL OTHER MEANS ARE PROVIDED TO ADEQUATELY BRACE THE STRUCTURE.
8. HOLES FOR BOLTS SHALL BE OF THE SAME NOMINAL DIAMETER AS THE BOLT PLUS 1/16".
9. USE STANDARD AISC GAGE AND PITCH FOR BOLTS EXCEPT AS NOTED OTHERWISE.
10. HIGH STRENGTH BOLTS SHALL BE 3/4" DIAMETER ASTM A-325N UNO-SEE SPECIFICATIONS.

FOUNDATIONS:

1. BEARING SOIL IS CLASSIFIED AS: SEE GEOTECHNICAL ENGINEERING REPORT.
2. THE FOOTINGS SHALL BEAR ON FIRM, DRY NATIVE MATERIAL OR ENGINEERED FILL WITH A MINIMUM PENETRATION OF 18 INCHES.
3. EXCAVATIONS SHALL BE CLEANED OF ALL DEBRIS. STANDING WATER SHALL BE REMOVED.
4. ALL FOOTINGS SHALL BE FORMED. FOUNDATIONS MAY BE PLACED IN NEAT EXCAVATIONS PROVIDED WRITTEN PERMISSION IS OBTAINED FROM THE ENGINEER AND FOOTINGS ARE INCREASED 2" IN WIDTH. SEE TYPICAL DETAIL.
5. NOTIFY THE ENGINEER 48 HOURS BEFORE PLACING FOUNDATIONS.
6. ALL EARTHWORK AND FOUNDATION SUBGRADES SHALL BE INSPECTED AND APPROVED BY THE PROJECT GEOTECHNICAL ENGINEER.

STRUCTURAL ALUMINUM:

1. ALUMINUM CONSTRUCTION SHALL CONFORM TO THE LATEST EDITION OF THE ALUMINUM CONSTRUCTION MANUAL OF THE ALUMINUM ASSOCIATION.
2. UNLESS OTHERWISE INDICATED, STRUCTURAL ALUMINUM SHALL BE ALLOY 6061-T6 AS SPECIFIED IN ASTM B308.
3. WHERE ALUMINUM IS IN CONTACT WITH CONCRETE OR MASONRY SURFACES, CONTACT SURFACES SHALL BE COATED WITH HEAVY ALKALI-RESISTANT BITUMINOUS PAINT.

EXPANSION ANCHOR AND ADHESIVE ANCHOR NOTES:

1. ANCHORS SHALL BE INSTALLED IN ACCORDANCE WITH THE RECOMMENDATIONS GIVEN IN THE ICC-ES REPORT.
2. SPECIAL INSPECTION IS REQUIRED FOR ICC ALLOWABLE TENSION VALUES LISTED IN THE INSPECTION NOTES. UNLESS NOTED OTHERWISE ANCHORS HAVE BEEN DESIGNED FOR SPECIAL INSPECTION.
3. DESIGN LOADS ON ANCHORS ARE NOT TO EXCEED 80% OF THE TENSION AND SHEAR VALUES AS RECOMMENDED BY THE MANUFACTURER.
4. TENSION TEST LOAD VALUES ARE BASED ON 80% OF TWICE THE TENSION VALUES LISTED.
5. ALLOWABLE LOADS MAY NOT BE INCREASED FOR DURATION OF LOADS SUCH AS WIND OR SEISMIC FORCES.
6. WHEN INSTALLING DRILLED IN ANCHORS IN EXISTING CONCRETE OR MASONRY, USE CARE AND CAUTION TO AVOID CUTTING OR DAMAGING EXISTING REINFORCING BARS.
7. THE TESTING OF THE ANCHORS SHALL BE DONE BY THE TESTING LABORATORY AND A REPORT OF THE TEST RESULTS SHALL BE SUBMITTED TO THE GOVERNING AGENCY AND ARCHITECT/STRUCTURAL ENGINEER. TESTING SHALL OCCUR 24 HOURS MINIMUM AFTER THE INSTALLATION OF THE ANCHORS.
8. ANCHORS INSTALLED IN METAL DECK WITH CONCRETE SHALL BE INSTALLED IN THE CENTER OF THE LOW FLUTE OF THE DECKING. THE DECKING SHALL HAVE A MINIMUM THICKNESS OF 20 GAUGE. THE MINIMUM DEPTH OF EMBEDMENT ABOVE THE TOP OF THE DECK SHALL BE 1-1/2". THE EFFECTIVE DEPTH OF EMBEDMENT IS CONSIDERED TO BE 1/3 OF THE METAL DECK HEIGHT PLUS THE DEPTH OF EMBEDMENT ABOVE THE TOP OF THE DECK.
9. ANCHORS SHALL NOT BE INSTALLED IN CONCRETE LESS THAN 21 DAYS OLD.

CODE:

1. 2018 INTERNATIONAL BUILDING CODE (IBC). 2019 CALIFORNIA BUILDING CODE (CBC)
2. CODE REQUIREMENTS FOR ENVIRONMENTAL ENGINEERING CONCRETE STRUCTURES (ACI 350-06) AND COMMENTARY (ACI 350R-06).
3. BUILDING CODE REQUIREMENTS FOR STRUCTURAL CONCRETE (ACI 318-14).
4. MINIMUM DESIGN LOADS FOR BUILDINGS AND OTHER STRUCTURES (ASCE 7-16).

SEISMIC DESIGN REQUIREMENTS:

SEISMIC COEFFICIENTS	Ss = 1.987g	Sms = 2.385g
	S1 = 0.82g	Sm1 = 2.05g
	Fa = 1.2	SDS = 1.59g
	Fv = 2.5	SD1 = 1.367g
SITE CLASS	D	
RISK CATEGORY	III	
SEISMIC DESIGN CATEGORY	D	
IMPORTANCE FACTOR	I =1.25	
NON-BUILDING STRUCTURE		PER ASCE 7-16
RESPONSE MODIFICATION FACTOR	R =	CHAPTER 15 SECTION
IMPORTANCE FACTOR	I =	15.4.1.1 & TABLES 15.4-1 & 15.4-2

SEE SPECIFICATION SECTION - 01610 FOR OTHER REQUIREMENTS.

WIND DESIGN REQUIREMENTS:

BASIC WIND SPEED	115 MPH
EXPOSURE CATEGORY	C
RISK CATEGORY	III

SEE SPECIFICATION SECTION - 01615 FOR OTHER REQUIREMENTS.

GEOTECHNICAL REPORT:

SAN JUAN BAUTISTA TO HOLLISTER SANITARY FORCE MAIN PROJECT
SAN BENITO COUNTY, CALIFORNIA. BY CRAWFORD & ASSOCIATES, INC., FILE NO. 21-719.1
DATED XXXXXXXX

FLOOR LIVE LOAD:

SLAB ON GRADE= 250 PSF
ELEVATED FLOOR SLAB = 200 PSF

FLOOD DESIGN DATA:

FLOOD ZONE X

ROOF LIVE LOAD:

20 PSF REDUCEABLE

GROUND SNOW LOAD:

N.A.

Revision	By	Appd.	YY.MM.DD

	By	Appd	YYYY.MM.DD
BID SET	KM	GIA	2022.08.01
Issued			

Permit/Seal

REGISTERED PROFESSIONAL ENGINEER
GREGORY A. DAVIS
No. 54431
Exp.6-30-24
STRUCTURAL
STATE OF CALIFORNIA

08/01/2022

Consultant

Stantec

Stantec Consulting Services Inc.
3875 Atherton Road
Rocklin CA 95765-3716
Tel:(916) 773-8100
www.stantec.com

Copyright Reserved
The Contractor shall verify and be responsible for all dimensions. DO NOT scale the drawing - any errors or omissions shall be reported to Stantec without delay. The Copyrights to all designs and drawings are the property of Stantec. Reproduction or use for any purpose other than that authorized by Stantec is forbidden.

Client/Project Logo

Client/Project

City of San Juan Bautista

SANITARY SEWER FORCE MAIN TO HOLLISTER PROJECT

San Juan Bautista, California

File Name: 31441-S001 & S002	ASB	SDS	SDS	2022.08.01
	Dwn.	Dsgn.	Chkd.	YYYY.MM.DD

Title

STRUCTURAL TYPICAL NOTES

Project No. 184031441
Scale NONE
Revision 0
Sheet 74 of 128
Drawing No. S002

ORIGINAL SHEET - ANSI D

v:\1AMS\active\184031441\drawing\sct\31441-s001 & s002 2022.07.21 12:20:08 PM

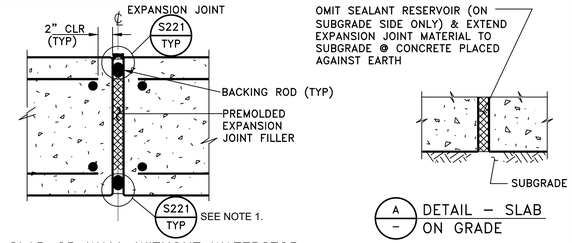

SLAB OR WALL WITHOUT WATERSTOP

A – DETAIL – SLAB ON GRADE

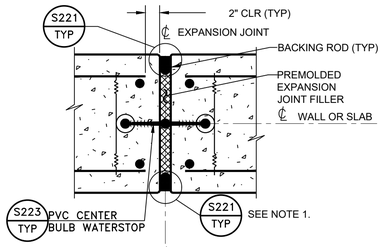

SLAB OR WALL WITH WATERSTOP

NOTES:

1. USE A – AT UNDERSIDE OF SLABS ON GRADE ONLY.
2. SEE DRAWINGS FOR LOCATION OF REINFORCEMENT.
3. WATERSTOP SHALL BE THOROUGHLY CLEANED PRIOR TO PLACING CONCRETE.
4. SINGLE LAYER REINFORCED SLABS OR WALLS SIMILAR.

EXPANSION JOINT

SCALE: NONE — S200 TYP

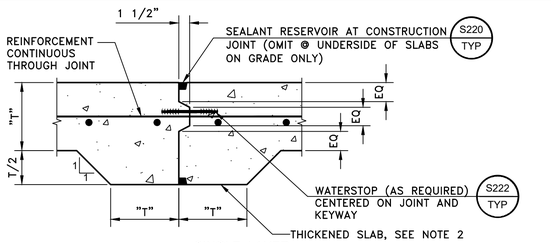

SINGLE LAYER REINFORCING

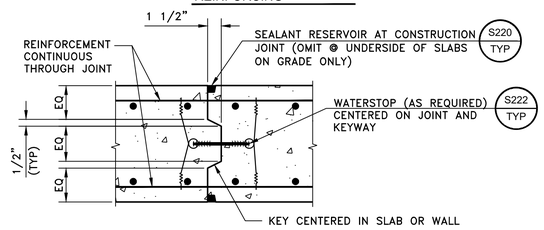

DOUBLE LAYER REINFORCING

NOTES:
1. SANDBLAST JOINT & REINFORCEMENT PRIOR TO PLACING CONCRETE FOR NEXT SLAB OR WALL.
2. THICKENED SECTION FOR CONCRETE PLACED AGAINST EARTH ONLY.
3. WATERSTOP SHALL BE THOROUGHLY CLEANED BEFORE PLACING CONCRETE.
4. SEE DRAWINGS FOR REINFORCEMENT.

KEYED CONSTRUCTION JOINT (OR T ≥ 12")

SCALE: NONE — S205 TYP

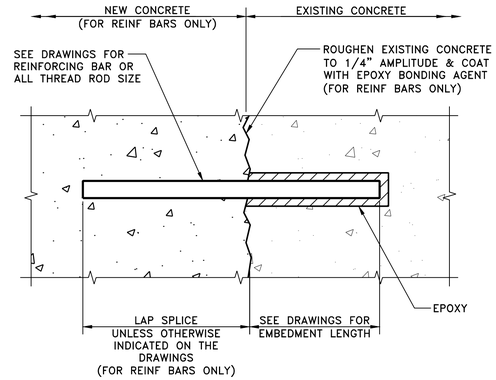

NOTES:

1. INSTALLATION OF REINFORCING BARS AND ALL THREAD RODS AS INDICATED IN THE SPECIFICATIONS.

EPOXY BONDED REINFORCING BARS

SCALE: NONE — S206 TYP

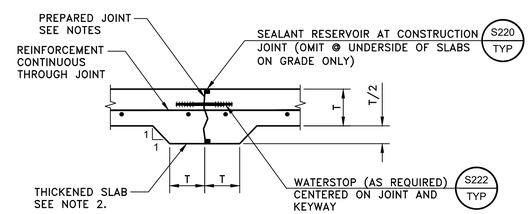

SINGLE LAYER REIFORCING

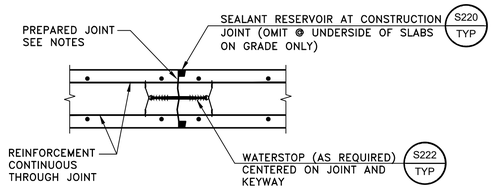

DOUBLE LAYER REIFORCING

NOTES:

1. SANDBLAST JOINT AND REINFORCEMENT PRIOR TO PLACING CONCRETE FOR NEXT SLAB OR WALL.
2. THICKENED SECTION FOR CONCRETE PLACED AGAINST EARTH.
3. WATERSTOP SHALL BE THOROUGHLY CLEANED BEFORE PLACING CONCRETE.
4. SEE DRAWINGS FOR REINFORCEMENT.

NON-KEYED CONSTRUCTION JOINT (FOR T<12")

SCALE: NONE — S207 TYP

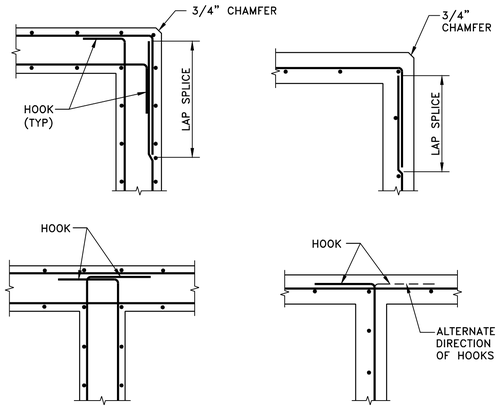

NOTES:

1. ALL HOOKS SHALL BE ACI STD 90 DEGREE HOOKS WITH 12" MINIMUM RETURN.
2. FOR VERTICAL AND HORIZONTAL BARS SEE STRUCTURAL PLANS.

REINFORCEMENT AT CORNERS AND INTERSECTIONS

SCALE: NONE — S213 TYP

NOTES FOR DETAILS: S216, S217

1. THIS DETAIL TO BE USED EXCEPT WHEN NOTED OTHERWISE ON STRUCTURAL DRAWINGS.
2. NORMAL REINFORCEMENT CUT AT OPENING:
   AS_1 = 1/2 TOTAL Av CUT BARS
   AS_2 = 1/2 TOTAL Ah CUT BARS TO BE ADDED ON EACH SIDE OF OPENING.
3. DIAGONAL BARS TO BE PLACED:
   a) AT ℄ OF WALL OR SLAB WHERE ONE LAYER OF REINFORCEMENT IS PROVIDED.
   b) AT EACH FACE OF WALLS OR SLABS WHERE TWO LAYERS OF REINFORCEMENT ARE PROVIDED.
4. PROVIDE DIAGONAL DOWEL FOR EACH LAYER OF REINFORCEMENT (#4 x 3'–0") U.N.O.
5. LOCATE ADDITIONAL BARS AT MID SPACING BETWEEN CONTINUOUS BARS THAT ARE NOT CUT.
6. LAP SPLICE LENGTHS, A & B, SHALL BE PER CONCRETE AND REINFORCING STEEL NOTE #10.

NOTES FOR ADDITIONAL REINFORCEMENT AT OPENINGS

SCALE: NONE — S215 TYP

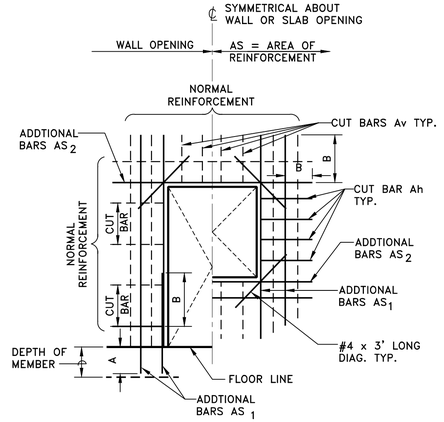

NOTES:

1. IF "A" IS GREATER THAN DEPTHOF MEMBER PROVIDE HOOKED BAR A
2. FOR ADDITIONAL REINFORCEMENT SIZES & LENGTHS SEE S215 TYP

ADDITIONAL REINFORCEMENT AT RECTANGULAR OPENINGS

SCALE: NONE — S216 TYP

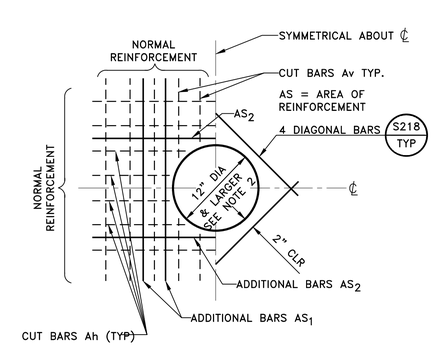

ELEVATION

NOTES:

1. FOR ADDITIONAL REINFORCEMENT SIZES & LENGTHS SEE S215 TYP
2. FOR CIRCULAR OPENINGS LESS THAN 12"ø, SEE S218 TYP

ADDITIONAL REINFORCEMENT AT CIRCULAR OPENINGS

SCALE: NONE — S217 TYP

Revision	By	Appd.	YY.MM.DD
BID SET	KM	GIA	2022.09.01
Issued	By	Appd	YYYY.MM.DD

Permit/Seal

REGISTERED PROFESSIONAL ENGINEER — STEVEN DAVIS TYREE — No. 31431 — Exp.6-30-24 — STRUCTURAL — STATE OF CALIFORNIA

09/01/2022

Consultant

Stantec

Stantec Consulting Services Inc.
3875 Atherton Road
Rocklin CA 95765-3716
Tel: (916) 773-8100
www.stantec.com

Copyright Reserved
The Contractor shall verify and be responsible for all dimensions. DO NOT scale the drawing - any errors or omissions shall be reported to Stantec without delay. The Copyrights to all designs and drawings are the property of Stantec. Reproduction or use for any purpose other than that authorized by Stantec is forbidden.

Client/Project Logo

Client/Project

City of San Juan Bautista

SANITARY SEWER FORCE MAIN TO HOLLISTER PROJECT

San Juan Bautista, California

File Name: 31441-S003 TO S011 | ASB Dwn. | SDS Dsgn. | SDS Chkd. | 2022.09.01 YYYY.MM.DD

Title

TYPICAL STRUCTURAL DETAILS

Project No. 184031441 | Scale AS SHOWN

Revision 0 | Sheet 75 of 128 | Drawing No. S003

I:\v1\MKR_projfiles\184031441\project\drawing\dwt\31441-s003 to s011 2022.08.30 10:58:19 AM

ORIGINAL SHEET - ANSI D

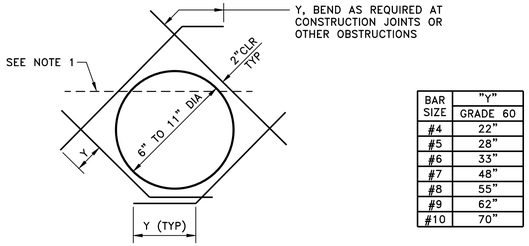

BAR SIZE	"Y" GRADE 60
#4	22"
#5	28"
#6	33"
#7	48"
#8	55"
#9	62"
#10	70"

NOTES:

1. CUT TYPICAL REINFORCEMENT AT OPENING.
2. DIAGONAL BARS TO BE PLACED: a) AT CENTERLINE OF WALL OR SLAB WHERE ONE LAYER OF REINFORCEMENT IS PROVIDED. b) AT EACH FACE OF WALLS OR SLABS WHERE TWO LAYERS OF REINFORCEMENT ARE PROVIDED.
3. UNLESS OTHERWISE NOTED, SIZE OF DIAGONAL BARS SHALL BE THE SIZE OF THE LARGEST REINFORCEMENT CUT.
4. USE THIS DETAIL FOR ALL CIRCULAR OPENINGS 6" THROUGH 11" UNLESS OTHERWISE NOTED ON THE STRUCTURAL DRAWINGS.

DIAGONAL REINFORCEMENT AT CIRCULAR OPENINGS

SCALE: NONE — S218 TYP

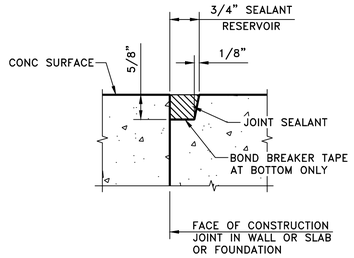

NOTES:

1. SEE SPECIFICATIONS FOR SURFACE PREPARATION.
2. PRIME VERTICAL EDGES.

SEALANT RESERVOIR AT CONSTRUCTION JOINT

SCALE: NONE — S220 TYP

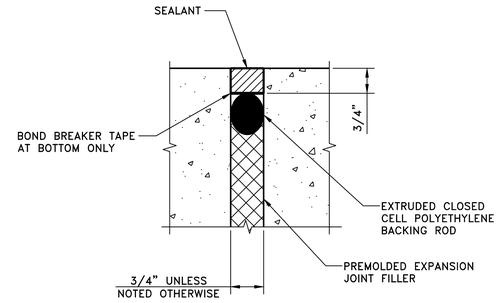

SEALANT RESERVOIR AT EXPANSION JOINT

SCALE: NONE — S221 TYP

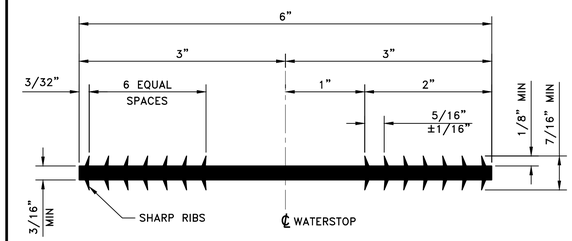

PVC FLATSTRIP WATERSTOP

SCALE: NONE — S222 TYP

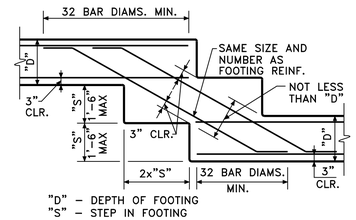

TYPE 1 - STEPPED TOP OF FOOTING

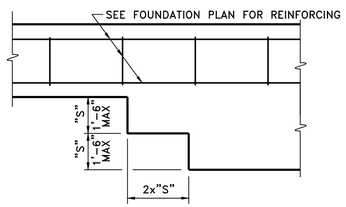

TYPE 2 - LEVEL TOP OF FOOTING

TYPICAL STEP IN FOOTING WALL

SCALE: NONE — S232 TYP

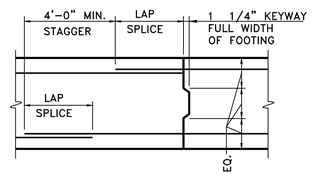

FOOTING ELEVATION

FOOTING CONSTRUCTION JOINT

SCALE: NONE — S233 TYP

1. THE MINIMUM PAD SIZE SHALL BE AS INDICATED OR AS SHOWN ON THE DRAWINGS OR AS DETERMINED BY THE EQUIPMENT MANUFACTURER.
2. THE SIZE, NUMBER, TYPE, LOCATION AND THREAD PROJECTION OF THE ANCHOR BOLTS SHALL BE DETERMINED BY THE EQUIPMENT MANUFACTURER. HOLD CONCRETE ANCHOR BOLTS IN POSITION WITH A TEMPLATE WHILE PAD IS BEING PLACED.
3. USE ANCHOR BOLT SLEEVES TO PROVIDE THE ANCHOR BOLT A MINIMUM MOVEMENT OF 1/2" IN ALL DIRECTIONS. SLEEVES SHALL BE FILLED WITH NON-SHRINK GROUT.
4. ANCHOR BOLT SLEEVES SHALL HAVE A MINIMUM INTERNAL DIAMETER 1" GREATER AND A MAXIMUM INTERNAL DIAMETER 3" GREATER THAN "D" ANCHOR BOLT DIAMETER.
5. EQUIPMENT BASES SHALL BE INSTALLED LEVEL U.O.N.
6. PROVIDE WEDGES OR SHIMS TO SUPPORT THE BASE WHILE THE NON-SHRINK GROUT IS PLACED. TEMPORARY LEVELING NUTS SHALL BE BACKED OFF. THE WEDGES OR SHIMS THAT REMAIN IN PLACE SHALL NOT BE EXPOSED TO VIEW.
7. WHERE CONCRETE SLAB OR BEAM THICKNESS WILL NOT ACCOMMODATE THE ANCHOR BOLT, PROVIDE EXTRA THICKNESS OF SLAB OR BEAM.
8. CONTRACTOR TO PROVIDE STRUCTURAL CALCS STAMPED BY A NEVADA REGISTERED CIVIL OR STRUCTURAL ENGINEER FOR EQUIPMENT ANCHORAGE.

EQUIPMENT BASE NOTES

SCALE: NONE — S235 TYP

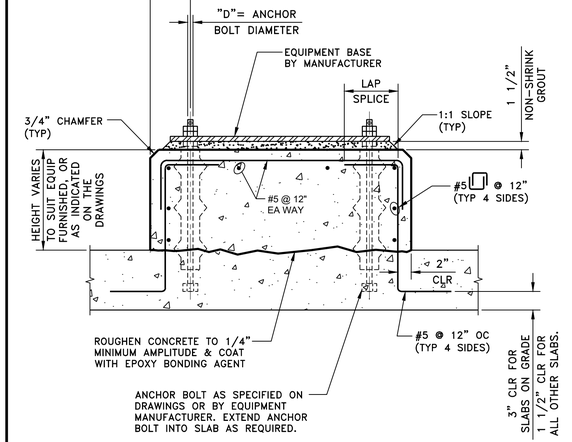

NOTES: FOR ADDITIONAL NOTES SEE S235 TYP

EQUIPMENT BASE WITH GROUT PAD

SCALE: NONE — S236 TYP

ORIGINAL SHEET - ANSI D

Revision	By	Appd.	YY.MM.DD
BID SET	KM	GIA	2022.09.01
Issued	By	Appd	YYYY.MM.DD

Permit/Seal

REGISTERED PROFESSIONAL ENGINEER — SUSAN DAVIS — No. S4431 — Exp.6-30-24 — STRUCTURAL — STATE OF CALIFORNIA

09/01/2022

Consultant

Stantec

Stantec Consulting Services Inc.
3875 Atherton Road
Rocklin CA 95765-3716
Tel: (916) 773-8100
www.stantec.com

Copyright Reserved
The Contractor shall verify and be responsible for all dimensions. DO NOT scale the drawing - any errors or omissions shall be reported to Stantec without delay. The Copyrights to all designs and drawings are the property of Stantec. Reproduction or use for any purpose other than that authorized by Stantec is forbidden.

Client/Project Logo

Client/Project

City of San Juan Bautista

SANITARY SEWER FORCE MAIN TO HOLLISTER PROJECT

San Juan Bautista, California

File Name: 31441-S003 TO S011 | ASB Dwn. | SDS Dsgn. | SDS Chkd. | 2022.09.01 YYYY.MM.DD

Title

TYPICAL STRUCTURAL DETAILS

Project No. 184031441 | Scale AS SHOWN

Revision 0 | Sheet 76 of 128 | Drawing No. S004

I:\1Shift\projects\184031441\project\drawing\dwt\31441-s003 to s011 2022.08.30 11:55:55 AM

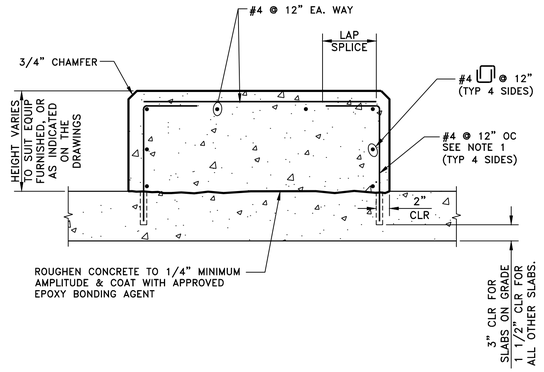

NOTES:

1. DOWELS SHALL HAVE MINIMUM 4" EMBEDMENT AND BE SECURED WITH APPROVED ADHESIVE EPOXY.
2. FOR ADDITIONAL NOTES SEE EQUIPMENT BASE NOTES, TYPICAL DETAIL S235.

EQUIPMENT BASE

SCALE: NONE

S237 TYP

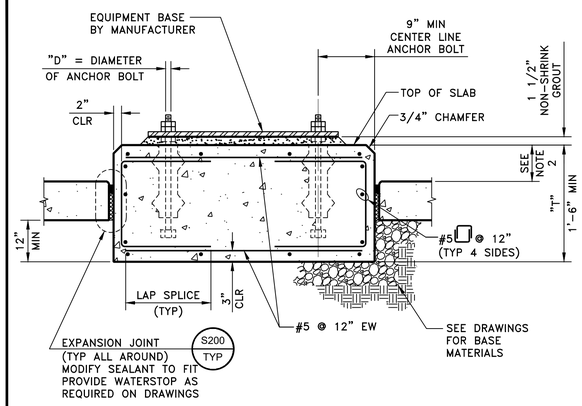

NOTES:

1. PAD THICKNESS "T" AS REQUIRED BY EQUIPMENT MANUFACTURER. PAD DIMENSIONS, ANCHOR BOLT SIZE AND LOCATION AND OTHER EMBEDDED STEEL SHALL CONFORM TO EQUIPMENT MANUFACTURER'S REQUIREMENTS.
2. HEIGHT VARIES TO SUIT EQUIPMENT FURNISHED OR AS INDICATED ON THE DRAWINGS.
3. FOR ADDITIONAL NOTES SEE S235 TYP.

ISOLATED EQUIPMENT BASE

SCALE: NONE

S238 TYP

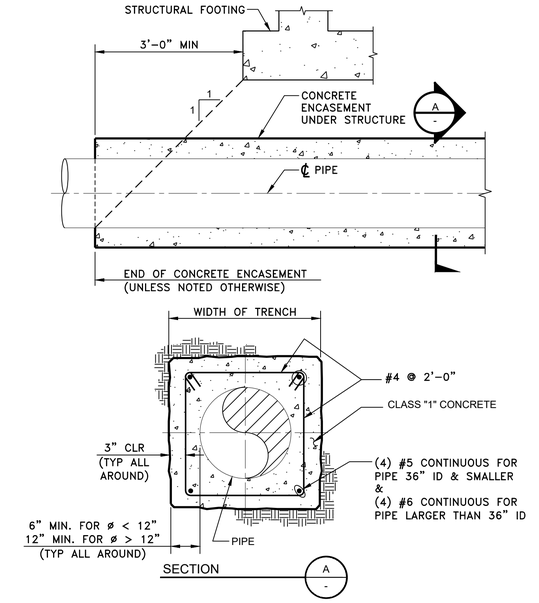

CONCRETE ENCASEMENT OF PIPE

SCALE: NONE

S240 TYP

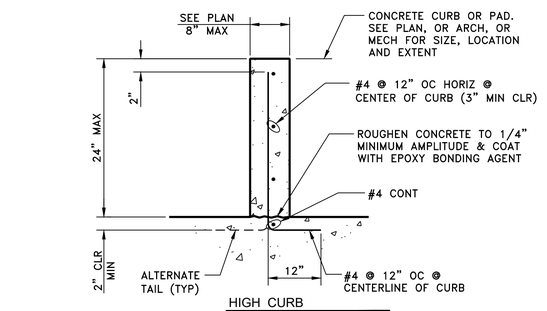

CONCRETE CURB

SCALE: NONE

S244 TYP

THICKNESS t	BARS "A" SIZE/SPACING	BARS "B" SIZE/SPACING
4"	#4 @ 18" CC	#4 @ 18" CC
6"	#5 @ 18" CC	#5 @ 18" CC
8"	#5 @ 12" CC	#5 @ 12" CC
12"	#5 @ 12" CC T&B	#5 @ 12" CC T&B

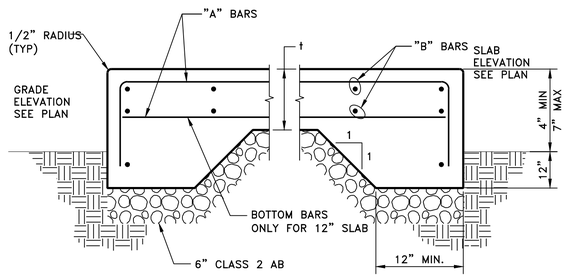

NOTES:

1. FOR SLAB THICKNESS UP TO 8", REINFORCEMENT SHALL BE PLACED AT SLAB CENTER.

CONCRETE SLAB ON GRADE

SCALE: NONE

S245 TYP

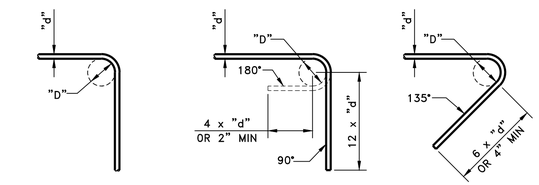

TYPICAL BEND | TYPICAL HOOK | TYPICAL TIE & STIRRUP HOOK

BAR SIZE	BEND DIAMETER
#3–#8	"D"= 6 x "d"
#9–#11	"D"= 8 x "d"
#14 & #18	"D"= 24 x "d"

REINFORCING BENDS

BAR SIZE	BEND DIAMETER
#3–#4	"D"= 4 x "d"
#5–#8	"D"= 4 x "d"

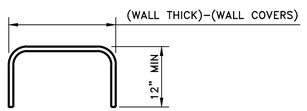

NOTES:

1. TO BE PROVIDED AT:
   a. TOP OF WALL
   b. TOP AND BOTTOM OF THE WALL AT OPENING
2. MATCH SIZE AND SPACING OF U BARS WITH WALL VERTICAL REINFORCEMENT.

TYPICAL WALL U BARS
(ALTERNATIVE TO 'L' HOOK)

REINFORCING BENDS

SCALE: NONE

S257 TYP

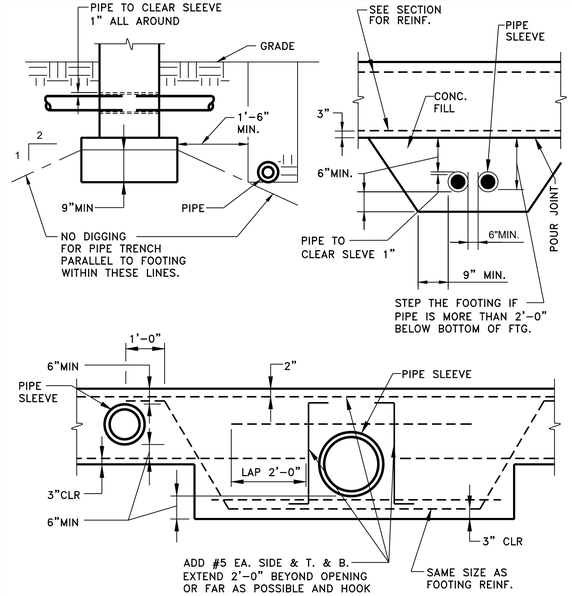

TYPICAL LOCATION OF PIPE AT FOOTING

SCALE: NONE

S260 TYP

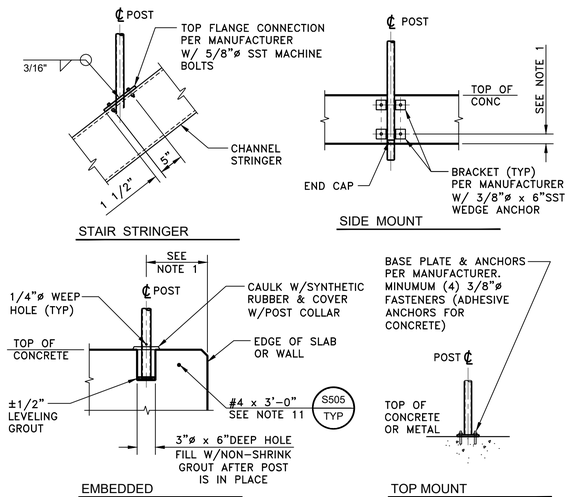

NOTES:

1. PROVIDE BRACKET MANUFACTURES MINIMUM EDGE DISTANCE.
2. COAT ALL ALUMIMUM SURFACES IN CONTACT WITH CONCRETE PER SPECIFICATIONS.
3. FOR ADDITIONAL NOTES SEE HANDRAIL/GUARDRAIL NOTES TYPICAL DETAIL S505 .

HANDRAIL / GUARDRAIL POST CONNECTIONS

SCALE: NONE

S502 TYP

ORIGINAL SHEET - ANSI D

Revision	By	Appd.	YY.MM.DD
BID SET	KM	GIA	2022.09.01
Issued	By	Appd	YYYY.MM.DD

Permit/Seal

REGISTERED PROFESSIONAL ENGINEER — SUSAN DAHL — No. 54431 — Exp.6-30-24 — STRUCTURAL — STATE OF CALIFORNIA

09/01/2022

Consultant

Stantec

Stantec Consulting Services Inc.
3875 Atherton Road
Rocklin CA 95765-3716
Tel: (916) 773-8100
www.stantec.com

Copyright Reserved
The Contractor shall verify and be responsible for all dimensions. DO NOT scale the drawing - any errors or omissions shall be reported to Stantec without delay. The Copyrights to all designs and drawings are the property of Stantec. Reproduction or use for any purpose other than that authorized by Stantec is forbidden.

Client/Project Logo

Client/Project

City of San Juan Bautista

SANITARY SEWER FORCE MAIN TO HOLLISTER PROJECT

San Juan Bautista, California

File Name: 31441-S003 TO S011 | ASB Dwn. | SDS Dsgn. | SDS Chkd. | 2022.09.01 YYYY.MM.DD

Title

TYPICAL STRUCTURAL DETAILS

Project No. 184031441 | Scale AS SHOWN

Revision 0 | Sheet 77 of 128 | Drawing No. S005

I:\1-SMD_projfiles\184031441\project\drawing\dgn\31441-s003 to s011 2022.08.30 11:55:56 AM

1. ALL HANDRAILS/GUARDRAILS SHALL BE ALUMINUM UNLESS OTHERWISE NOTED.

2. ALL HANDRAILS/GUARDRAILS SHALL BE IN ACCORDANCE WITH CURRENT OSHA SAFETY CODE REQUIREMENTS.

3. PLACE CENTER OF EMBEDDED POSTS 6" FROM EDGE OF CONCRETE OR 4" FROM EDGE OF CONCRETE STAIR NOSING UNLESS OTHERWISE INDICATED ON THE DRAWINGS.

4. PLACE RAIL POSTS OPPOSITE EACH OTHER WHERE GUARDRAILS ARE PARALLEL.

5. COAT ALL SURFACES OF ALUMINUM THAT COME IN CONTACT WITH CONCRETE IN ACCORDANCE WITH SPECIFICATIONS. PLACE NEOPRENE GASKET BETWEEN ALUMINUM AND STEEL.

6. PROVIDE SLIP JOINTS AT 24' MAXIMUM CENTERS FOR EXPANSION OF RAILS AND KICKPLATE. LOCATE RAIL SLIP JOINTS AT FACE OF POST. GAP AT TIME OF INSTALLATION SHALL BE BASED ON THE TEMPERATURE OF THE HANDRAIL (3/8"GAP AT 25°F, 0"GAP AT 100°F). AT CONCRETE EXPANSION JOINTS, PROVIDE MINIMUM OF 1" GAP IN SLIP JOINTS BUT NOT LESS THAN WIDTH OF CONCRETE EXPANSION JOINT. INSERT SLEEVES SHALL BE LONG ENOUGH TO ALLOW FOR THE FULL RANGE OF MOVEMENT.

7. PROVIDE KICKPLATE AT ALL LOCATIONS EXCEPT SLOPING GUARDRAILS ON STAIRS AND HANDRAIL MOUNTED ON 6" MINIMUM HIGH CURB. KICKPLATE MATERIAL SHALL BE SAME AS HANDRAIL/GUARDRAIL AND ATTACHED WITH SST BOLTS IN 5/16"ø x 3/4"ø SLOTTED HOLES. BOLT KICKPLATE TO POST WITH BOTTOM 1/4" CLEAR FROM SURFACE. FOR SIDE MOUNTED HANDRAIL, PROVIDE STANDARD SPACER BLOCK BETWEEN POST AND KICKPLATE TO MAINTAIN 1/4" MAXIMUM CLEAR SPACING. HAND TIGHTEN AND CENTER PUNCH BOLTS TO LOCK. SHALL ACCOMMODATE TEMPERATURE EXPANSION PER NOTE 6.

8. ALL GUARDRAILS SHALL BE FIXED UNLESS OTHERWISE INDICATED ON THE DRAWINGS.

9. HANDRAILS ALONG WALLS SHALL BE SINGLE RAIL WITH TOP OF RAIL AT 2'-10" HIGH ABOVE LANDINGS OR TREAD NOSINGS, OR TO MATCH TOP RAIL ON OPPOSITE SIDE WHERE HANDRAIL IS INTEGRAL WITH TOP OF GUARDRAIL. HANDRAILS ALONG WALLS SHALL BE FASTENED WITH STANDARD WALL BRACKETS PER HANDRAIL/GUARDRAIL MANUFACTURER AT 5'-0" ON CENTER MAXIMUM. END OF RAILS SHALL HAVE CLOSURES.

10. FOR RAIL POSTS MOUNTED TO BEAM OR STAIR CHANNEL, PROVIDE MANUFACTURERS REINFORCED CONNECTION FROM POST TO PLATE. PLATE AND REINFORCED INSERTS SHALL BE ALUMINUM OR STAINLESS STEEL.

11. PROVIDE #4 x 3'-0" REINFORCING BAR ADJACENT AND CENTERED AT EVERY EMBEDDED POST IF LONGITUDINAL REINFORCING DOES NOT PASS BETWEEN POST POCKET AND EDGE OF CONCRETE.

12. CONTRACTOR TO PROVIDE CALCULATIONS STAMPED BY A CIVIL OR STRUCTURAL ENGINEER LICENSED IN THE STATE OF NEVADA FOR ALL HANDRAIL AND GUARDRAIL.

HANDRAIL / GUARDRAIL NOTES

SCALE: NONE — S505 TYP

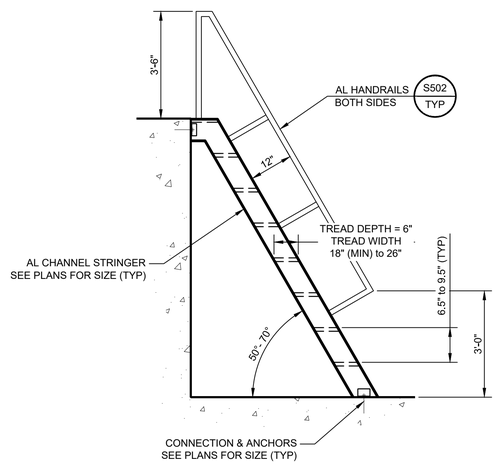

NOTE: SHIP STAIRS SHALL BE DESIGNED WITH A CONSISTENT TREAD RISE RANGING BETWEEN 6.5 TO 9.5 INCHES AND SHALL HAVE A CLEAR TREAD WIDTH OF AT LEAST 18 INCHES. DESIGN SHALL BE PER CBC 2019, IBC 2018 SECTION 1011.15 AND OSHA 29 CFR SECTION 1910.25 (STAIRWAYS), PARAGRAPH (e).

SHIP STAIRS

SCALE: NONE — S517 TYP

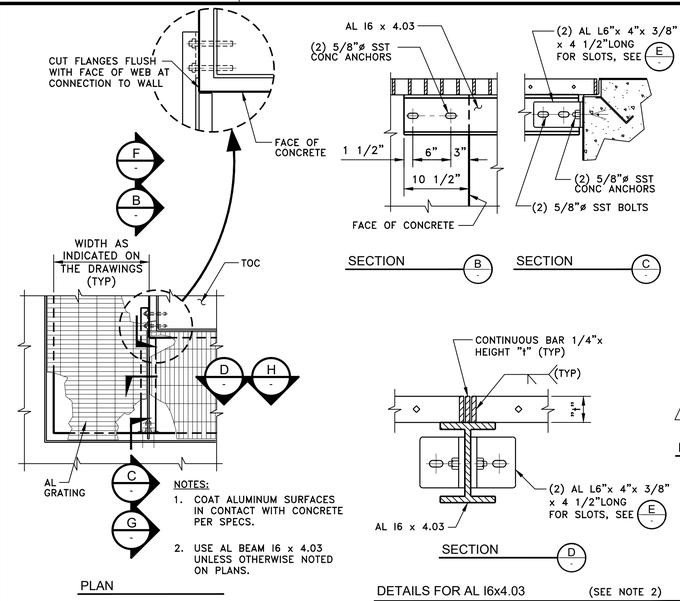

AL GRATING SUPPORT

SCALE: NONE — S519 TYP

MATERIALS					
GRATING MATERIAL	SUPPORT ANGLE	FRAME ANGLE	BENT BAR	GRATING CLIPS & STUDS	ADHESIVE ANCHORS
ALUMINUM	TYPE 304 SS	TYPE 304 SS	TYPE 304 SS	ALUMINUM	TYPE 316 SS
GALVANIZED STEEL	GALVANIZED STEEL	GALVANIZED STEEL	GALVANIZED STEEL	GALVANIZED STEEL	ASTM F1554 GR6, GALV
STAINLESS STEEL	TYPE 304 SS	TYPE 304 SS	TYPE 304 SS	TYPE 316 SS	TYPE 316 SS

NOTES:

1. GRATING DEPTH PER SPECIFICATIONS AND APPROVED BY ENGINEER (U.N.O.).
2. ALL ENDS AND OPENING SHALL BE BANDED.
3. WEIGHT OF GRATING SECTION SHALL NOT EXCEED 50 LBS.
4. PROVIDE A MINIMUM OF (4) CLIPS PER GRATING PANEL, APPROXIMATELY 4" FROM PANEL CORNERS. MAXIMUM CLIP SPACING AT 36" O.C.
5. MATERIALS PER TABLE ABOVE.
6. ALL GALVANIZED MATERIAL TO BE GALVANIZED AFTER FABRICATION. ANY FIELD WELDING OR CUTTING MUST BE TOUCHED UP WITH HIGH ZINC-DUST CONTENT PAINT COMPLYING WITH MIL-P-21035.
7. ALUMINUM IN CONTACT WITH DISSIMILAR MATERIALS SHALL BE COATED PER SPECIFICATIONS.
8. NOT ALL MATERIAL TYPES MAY BE USED ON A SINGLE PROJECT.
9. PROVIDE ANGLE FRAME OR SUPPORT ANGLES AT ALL SIDES OF OPENINGS (U.N.O.).

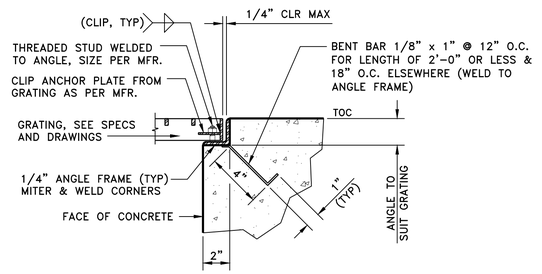

EMBEDDED GRATING SUPPORT

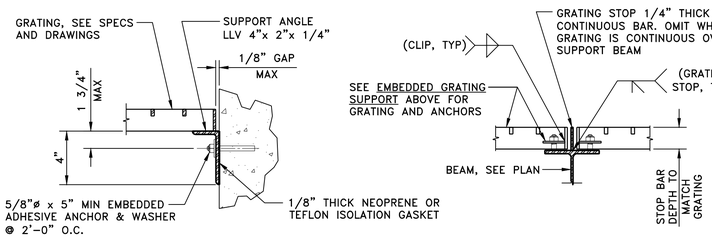

SIDE MOUNTED GRATING SUPPORT

BEAM MOUNTED GRATING

GRATING

SCALE: NONE — S520 TYP

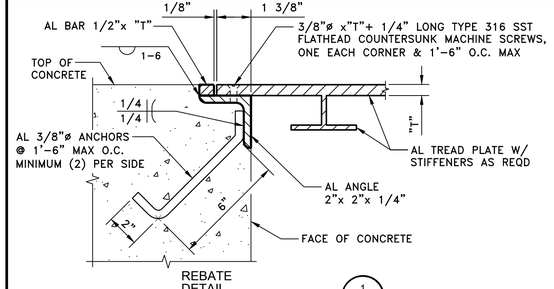

REBATE DETAIL — 1

NOTES:

1. ALUMINUM ANGLE AND BAR MAY BE EXTRUDED.
2. COAT ALUMINUM SURFACE IN CONTACT WITH CONRETE IN ACCORDANCE WITH THE SPECIFICATIONS.
3. OMIT PERIMETER MACHINE SCREWS WHERE HINGED IS INDICATED ON THE DRAWINGS.
4. HINGE AND HANDLE TYPICAL DETAIL S524 SHALL APPLY WHERE INDICATED ON THE DRAWINGS.
5. TREAD PLATE LIVE LOAD SHALL BE SAME AS FLOOR LIVE LOAD, SEE SCHEDULE TYPICAL DETAIL S524.
6. TREAD PLATE SHALL BE FABRICATED IN UNITS THAT DO NOT WEIGH MORE THAN 75 POUNDS.
7. MATERIALS SHOWN AS ALUMINUM SHALL BE 304 STAINLESS STEEL WHEN INDICATED ON DRAWINGS.

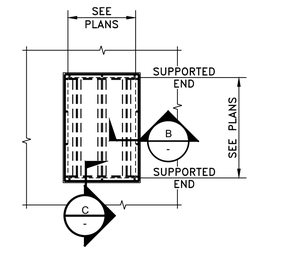

COVER SUPPORTED ON (4) SIDES - PLAN — 2

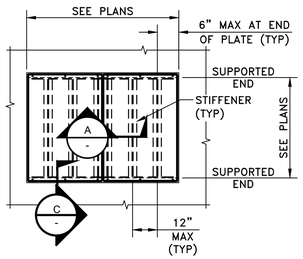

COVER SUPPORTED ON (2) SIDES - PLAN — 3

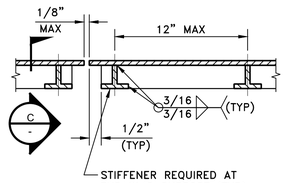

STIFFENER END CAP SECTION — A

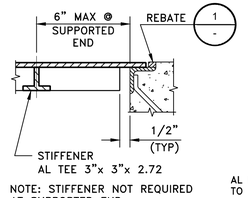

STIFFENER END CAP SECTION — B

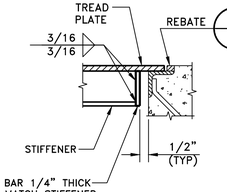

STIFFENER END CAP SECTION — C

ALUMIMUM OR STAINLESS STEEL HINGED COVER

SCALE: NONE — S523 TYP

Revision	By	Appd.	YY.MM.DD
BID SET	KM	GIA	2022.09.01
Issued	By	Appd	YYYY.MM.DD

Permit/Seal

REGISTERED PROFESSIONAL ENGINEER — STEVEN DAVIS TYREE — No. S8431 — Exp.6-30-24 — STRUCTURAL — STATE OF CALIFORNIA

09/01/2022

Consultant

Stantec

Stantec Consulting Services Inc.
3875 Atherton Road
Rocklin CA 95765-3716
Tel:(916) 773-8100
www.stantec.com

Copyright Reserved
The Contractor shall verify and be responsible for all dimensions. DO NOT scale the drawing - any errors or omissions shall be reported to Stantec without delay.
The Copyrights to all designs and drawings are the property of Stantec. Reproduction or use for any purpose other than that authorized by Stantec is forbidden.

Client/Project Logo

Client/Project

City of San Juan Bautista

SANITARY SEWER FORCE MAIN TO HOLLISTER PROJECT

San Juan Bautista, California

File Name: 31441-S003 TO S011	ASB	SDS	SDS	2022.09.01
	Dwn.	Dsgn.	Chkd.	YYYY.MM.DD

Title

TYPICAL STRUCTURAL DETAILS

Project No.	Scale
184031441	AS SHOWN
Revision	Sheet / Drawing No.
0	78 of 128 — S006

ORIGINAL SHEET - ANSI D
x:\1-SMD-ca\flow\184031441\drawing\ca\c\31441-d003 to d011 2022.08.30 10:59:18 AM

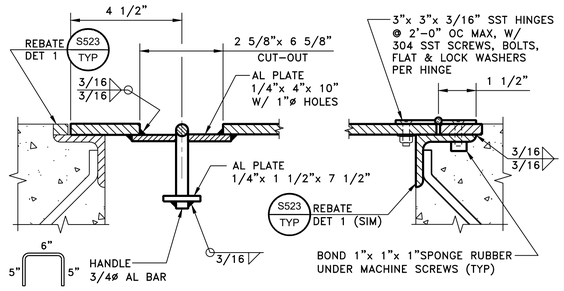

HANDLE DETAIL 4 -

HINGE DETAIL 5 -

THICKNESS OF TREAD PLATE "T" (INCH)				
LIVE LOAD (PSF)	SHORTER SPAN (FEET-INCH)			
	12"	1'-6"	2'-0"	2'-6" TO 4'-0"
100	3/16	1/4	3/8	1/2
150	1/4	3/8	1/2	1/2
200	1/4	3/8	1/2	3/8*
250	1/4	3/8	1/2	3/8*
300	1/4	3/8	1/2	3/8*
350	3/8	1/2	3/8*	3/8*
400	3/8	1/2	3/8*	3/8*

NOTE: SEE NOTES TYPICAL DETAIL S523.

TREAD PLATE SCHEDULE

ALUMINUM OR STAINLESS STEEL COVER HANDLE AND HINGE DETAIL

S524 TYP

SCALE: NONE

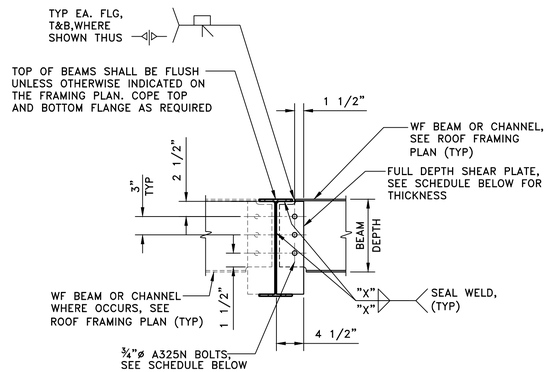

NOTE: CONNECTION DETAIL TYPICAL WHERE WF BEAM OR CHANNEL OCCURS ON BOTH SIDES OF WF BEAM

BEAM DEPTH (IN)	NUMBER BOLTS PER PLATE	PLATE THICKNESS (IN)	FILLET WELD SIZE "X" (IN)
8–10	2	3/8	1/4
12–14	3	3/8	1/4
16	4	3/8	1/4
18	5	3/8	1/4

SINGLE PLATE SHEAR CONNECTION

S525 TYP

SCALE: NONE

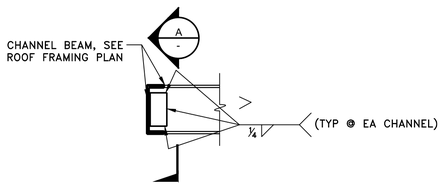

SECTION CONDITION @ CHANNEL B -

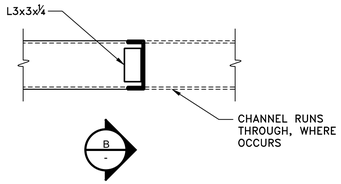

SECTION CONDITION @ CHANNEL A -

STEEL WELDED CONNECTION

S528 TYP

SCALE: NONE

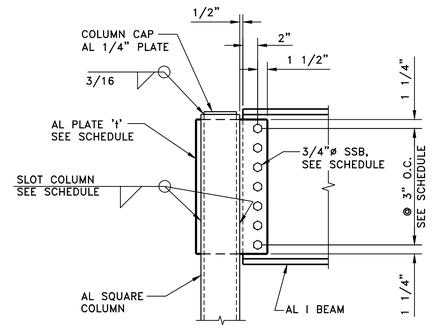

CONNECTION SCHEDULE				
I BEAM	AL PLATE 't'	WELD	#SSB	COMMENTS
I8, I10	1/4	3/16	2	3/4"ø
I12	1/4	3/16	3	
I14	3/8	1/4	3	
I16	3/8	1/4	4	
I18	1/2	1/4	5	
I21	1/2	1/4	6	
I24	1/2	1/4	7	
I27	1/2	1/4	8	
I30	3/4	5/16	9	3/4"ø

ALUMINUM BEAM TO ALUMINUM POST CONNECTION

S600 TYP

SCALE: NONE

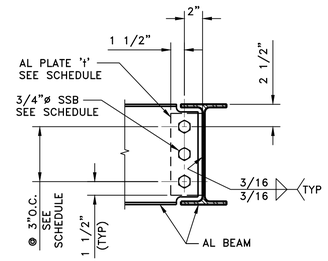

CONNECTION SCHEDULE				
I BEAM	AL PLATE 't'	WELD	#SSB	COMMENTS
I8, I10	1/4	3/16	2	3/4"ø
I12	1/4	3/16	3	
I14	3/8	1/4	3	

ALUMINUM BEAM TO ALUMINUM BEAM CONNECTION

S601 TYP

SCALE: NONE

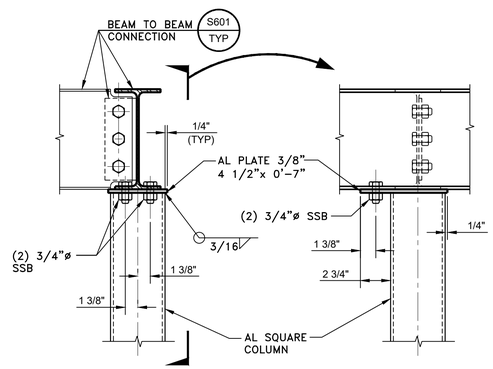

ALUMINUM BEAM/STRINGER TO ALUMINUM BEAM ON POST CONNECTION

S602 TYP

SCALE: NONE

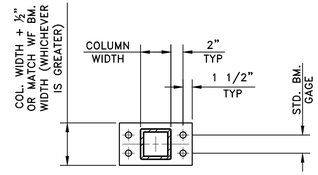

CAP PLATE PLAN

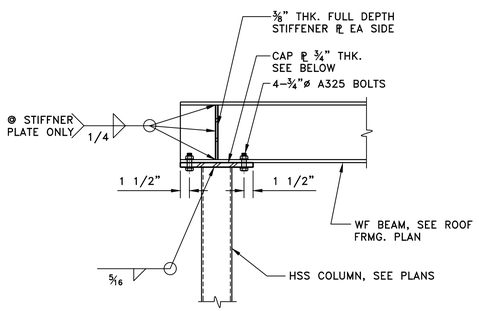

POST CAP CONNECTION

S603 TYP

SCALE: NONE

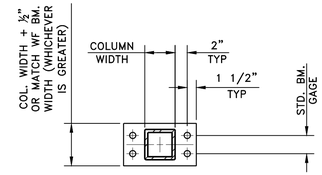

CAP PLATE PLAN

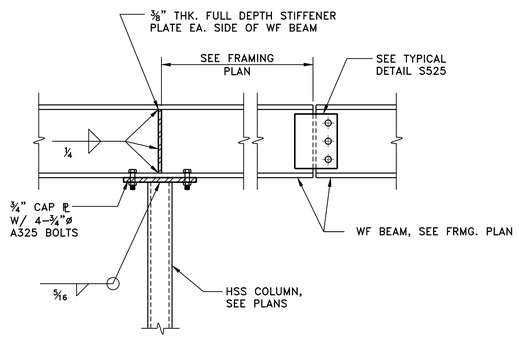

BEAM/HSS COLUMN CONNECTION

S615 TYP

SCALE: NONE

Revision	By	Appd.	YY.MM.DD

BID SET	KM	GIA	2022.09.01
Issued	By	Appd	YYYY.MM.DD

Permit/Seal

REGISTERED PROFESSIONAL ENGINEER — SUSAN DAVIS TAI — No. S6431 — Exp.6-30-24 — STRUCTURAL — STATE OF CALIFORNIA

09/01/2022

Consultant

Stantec

Stantec Consulting Services Inc.
3875 Atherton Road
Rocklin CA 95765-3716
Tel: (916) 773-8100
www.stantec.com

Copyright Reserved
The Contractor shall verify and be responsible for all dimensions. DO NOT scale the drawing - any errors or omissions shall be reported to Stantec without delay.
The Copyrights to all designs and drawings are the property of Stantec. Reproduction or use for any purpose other than that authorized by Stantec is forbidden.

Client/Project Logo

Client/Project

City of San Juan Bautista

SANITARY SEWER FORCE MAIN TO HOLLISTER PROJECT

San Juan Bautista, California

File Name: 31441-S003 TO S011	ASB	SDS	SDS	2022.09.01
	Dwn.	Dsgn.	Chkd.	YYYY.MM.DD

Title

TYPICAL STRUCTURAL DETAILS

Project No.	Scale
184031441	AS SHOWN
Revision	Sheet / Drawing No.
0	79 of 128 — S007

ORIGINAL SHEET - ANSI D
\\<LMD.path>\<LMD2>\31441\Drawing\Cad\S31441-S003 to S011 2022.08.30 13:57:37 AM

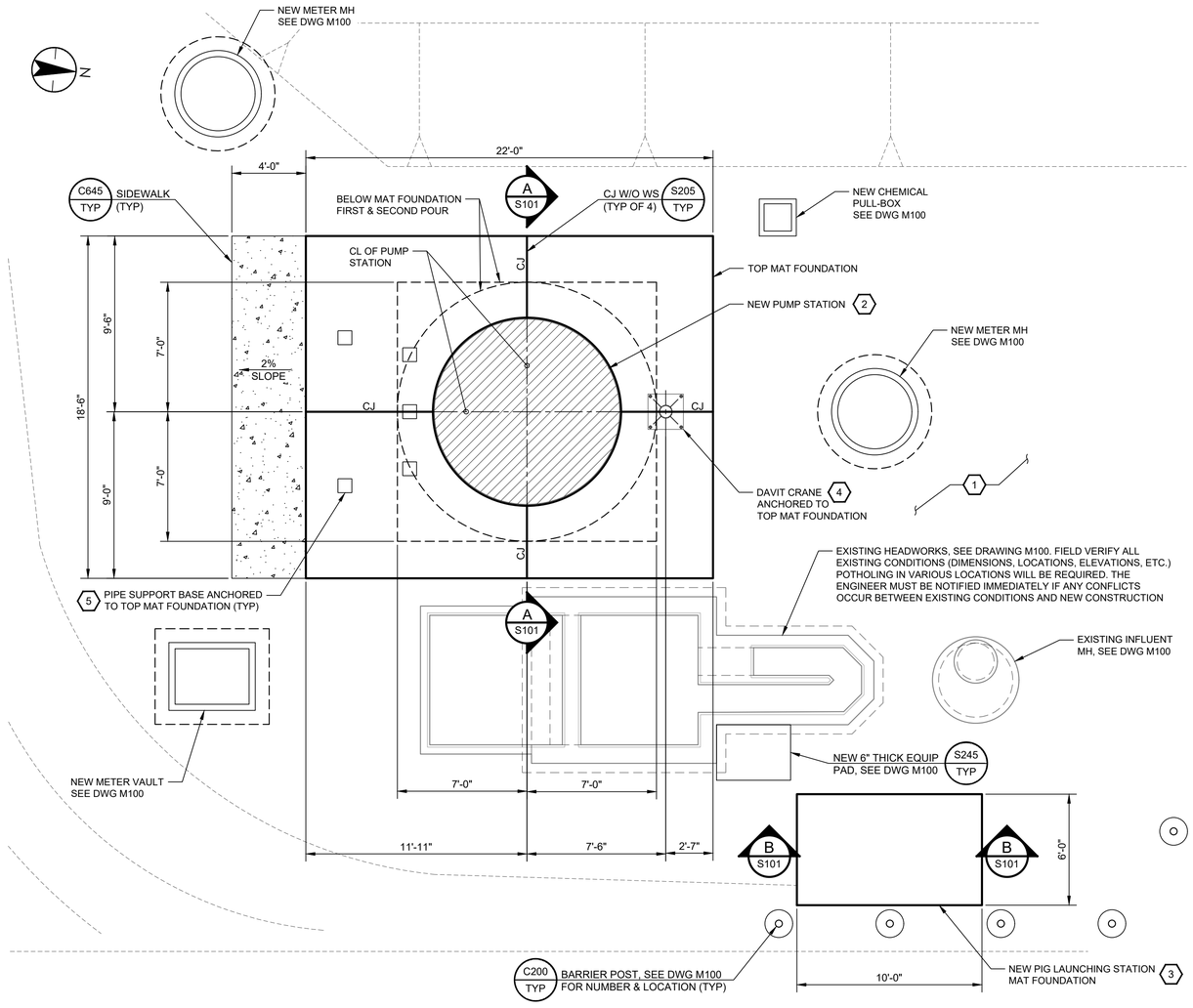

DESIGN BUILD KEY NOTES:

1. STRUCTURAL DESIGN PARAMETERS PRESENTED ARE FOR BIDDING PURPOSES. HOWEVER, NO GEOTECHNICAL INFORMATION IS AVAILABLE AT THE SITE AND THEREFORE, PRELIMINARY ASSUMPTIONS WERE MADE IN THE DEVELOPMENT OF THE STRUCTURAL DESIGN. PER SPECIFICATION 02020, THE CONTRACTOR IS RESPONSIBLE FOR DEVELOPMENT OF A GEOTECHNICAL REPORT AND CONFIRMATION AND ADJUSTMENT OF THE STRUCTURAL DESIGN.
2. PUMP STATION, SEE SPECIFICATION SECTION 13614 FOR MAT FOUNDATION BELOW FIRST AND SECOND POUR, CONCRETE INFILL AND ANGULAR AGGREGATE FILL.
3. PIG LAUNCHING STATION, SEE SPECIFICATION SECTION 15094 (SIM). FOR MAT FOUNDATION BIDDING PURPOSES ASSUME VOLUME OF CONCRETE EQUALS THREE (3) CUBIC YARDS. FOR BIDDING PURPOSES ASSUME THE MINIMUM REINFORCING REQUIREMENTS ARE A CONCRETE TO REINFORCING RATIO EQUAL TO 0.005. IN OTHER WORDS FOR A FOURTEEN INCH (14") THICK MAT REINFORCING SPACED AT TWELVE (12") WOULD REQUIRE TO BE #6 @ 12" T&B EW.
4. DAVIT CRANE, SEE SPECIFICATION SECTION 14313 FOR TOP MAT FOUNDATION, CONSTRUCTION JOINTS AND ANCHORAGE.
5. PIPE SUPPORTS, SEE SPECIFICATION SECTION 15094 FOR TOP MAT FOUNDATION, CONSTRUCTION JOINTS AND ANCHORAGE.

Revision	By	Appd.	YY.MM.DD
BID SET	KM	GIA	2022.09.01
Issued	By	Appd	YYYY.MM.DD

Permit/Seal

REGISTERED PROFESSIONAL ENGINEER — STEVEN DAVIS — No. S6431 — Exp.6-30-24 — STRUCTURAL — STATE OF CALIFORNIA

09/01/2022

Consultant

Stantec

Stantec Consulting Services Inc.
3875 Atherton Road
Rocklin CA 95765-3716
Tel: (916) 773-8100
www.stantec.com

Copyright Reserved
The Contractor shall verify and be responsible for all dimensions. DO NOT scale the drawing - any errors or omissions shall be reported to Stantec without delay.
The Copyrights to all designs and drawings are the property of Stantec. Reproduction or use for any purpose other than that authorized by Stantec is forbidden.

Client/Project Logo

Client/Project

City of San Juan Bautista

SANITARY SEWER FORCE MAIN TO HOLLISTER PROJECT

San Juan Bautista, California

File Name: 31441-S100	ASB	SDS	KKC	2022.09.01
	Dwn.	Dsgn.	Chkd.	YYYY.MM.DD

Title

PRIMARY PUMP STATION AND EXISTING HEADWORKS OVERALL PLAN

Project No.	Scale
184031441	1/4" = 1'-0"
Revision	Sheet
0	80 of 128

Drawing No. S100

ORIGINAL SHEET - ANSI D
\\<UNC path>\184031441\ca\sanwg\cad\31441-s100 2022.09.09 4:22:28 AM

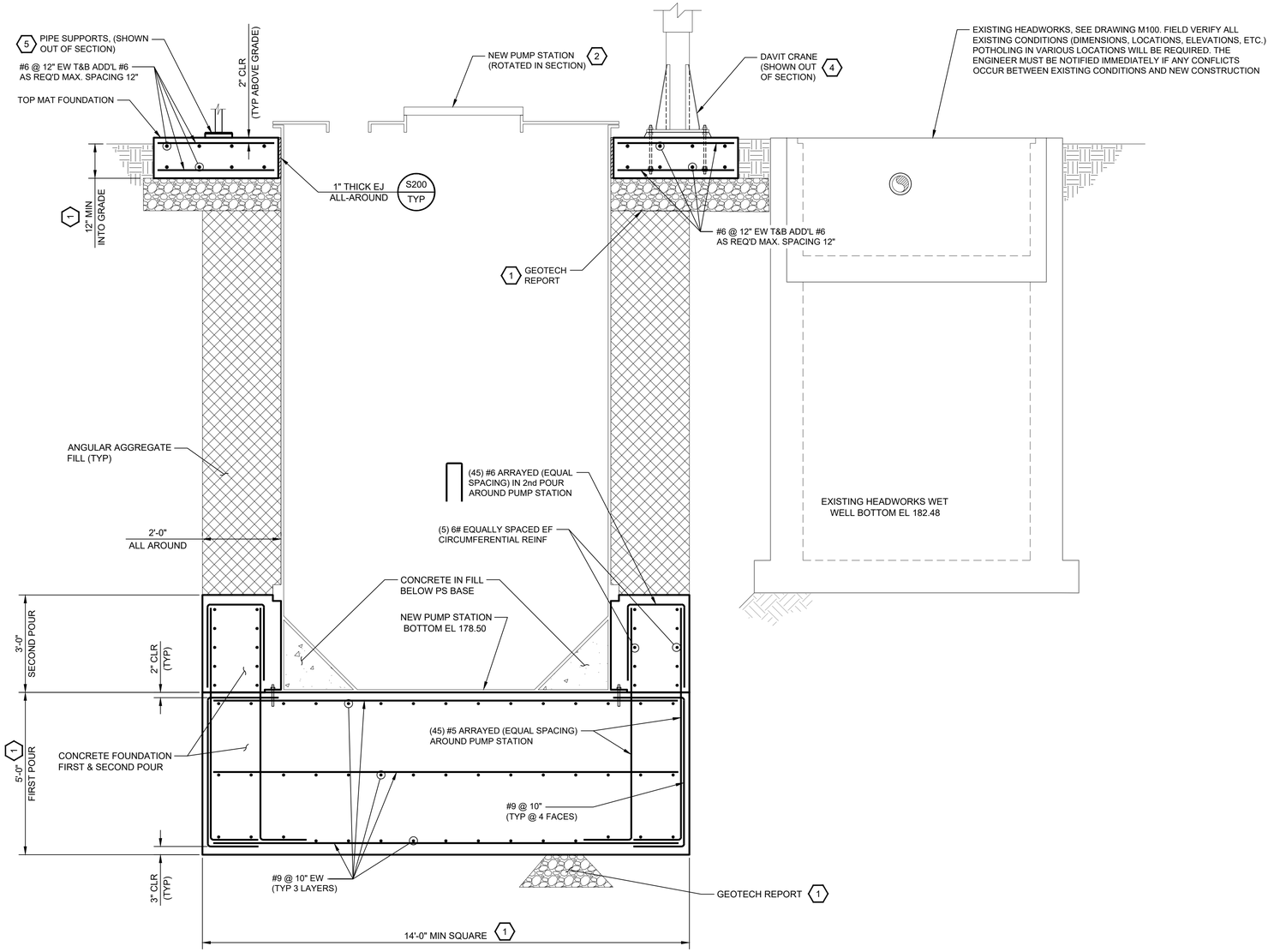

PUMP STATION TOP MAT &
BELOW MAT FOUNDATION SECTION A S100
SCALE: 1/2"=1'-0"

DESIGN BUILD KEY NOTES:

SEE DRAWING S100.

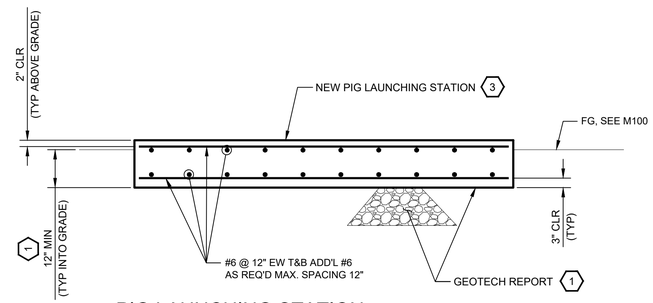

PIG LAUNCHING STATION
MAT FOUNDATION SECTION B S100
SCALE: 1/2"=1'-0"

Revision	By	Appd.	YY.MM.DD

Issued	By	Appd	YYYY.MM.DD
BID SET	KM	GIA	2022.09.01

Permit/Seal

REGISTERED PROFESSIONAL ENGINEER
STEVEN DAVID SOLL
No. S6431
Exp.6-30-24
STRUCTURAL
STATE OF CALIFORNIA

09/01/2022

Consultant

Stantec

Stantec Consulting Services Inc.
3875 Atherton Road
Rocklin CA 95765-3716
Tel: (916) 773-8100
www.stantec.com

Copyright Reserved

The Contractor shall verify and be responsible for all dimensions. DO NOT scale the drawing - any errors or omissions shall be reported to Stantec without delay.
The Copyrights to all designs and drawings are the property of Stantec. Reproduction or use for any purpose other than that authorized by Stantec is forbidden.

Client/Project Logo

Client/Project

City of San Juan Bautista

SANITARY SEWER FORCE MAIN TO HOLLISTER PROJECT

San Juan Bautista, California

File Name: 31441-S100

Dwn.	Dsgn.	Chkd.	YYYY.MM.DD
ASB	GIA	KKC	2022.09.01

Title

PRIMARY PUMP STATION SECTIONS

Project No. 184031441

Scale AS SHOWN

Revision 0

Sheet 81 of 128

Drawing No. S101

ORIGINAL SHEET - ANSI D

v:\1840\active\184031441\drawing\act\31441-s100 2022/09/09 6:22:51 AM

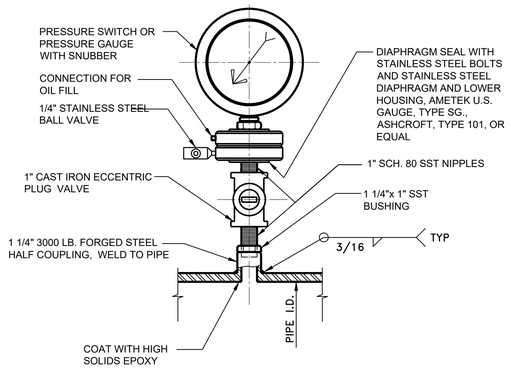

NOTES:

1. SEE PRESSURE GAUGE LOCATIONS AND PRESSURE RANGES ON DRAWINGS.
2. SEE ELECTRICAL DRAWINGS AND SPECIFICATIONS FOR LOCATION OF PRESSURE SWITCHES.

LIQUID SERVICE

PRESSURE GAUGE OR PRESSURE SWITCH WITH DIAPHRAGM SEAL

M103 TYP

SCALE: NONE

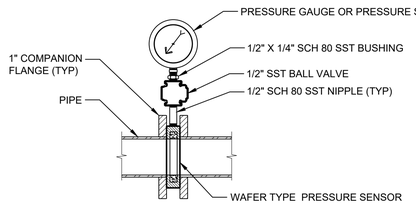

DETAIL

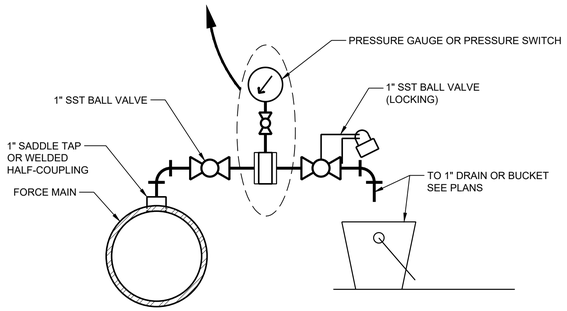

PRESSURE GAUGE OR PRESSURE SWITCH FROM PIPELINE

M105 TYP

SCALE: NONE

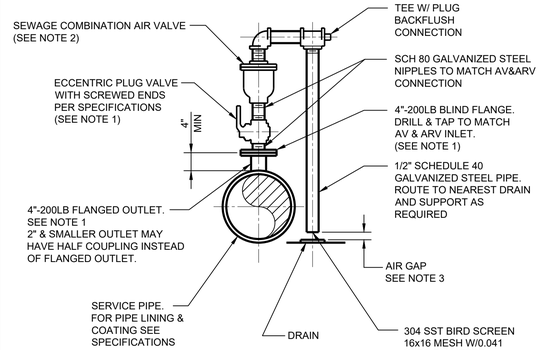

NOTES:

1. FLANGED OUTLET AND ECCENTRIC PLUG VALVE SHOULD BE SUITABLE FOR 200 PSI PRESSURE MINIMUM. INCREASE PRESSURE RATING AS REQUIRED TO MATCH PIPING SYSTEM TEST PRESSURE.
2. 2-INCH SCAV A.R.I. D-26 EQUIPPED WITH NON-SLAM OPTION, OR EQUAL.
3. WASTEWATER SERVICE REQUIRES AN AIR GAP OF (2) PIPE DIAMETER OR 2 INCHES, WHICHEVER IS LARGER. POTABLE WATER SERVICE REQUIRES 36 INCHES OR PER LOCAL HEALTH DEPARTMENT CODES, WHICHEVER IS LARGER.

SEWAGE COMBINATION AIR VALVE ASSEMBLY 3" AND SMALLER

M106 TYP

SCALE: NONE

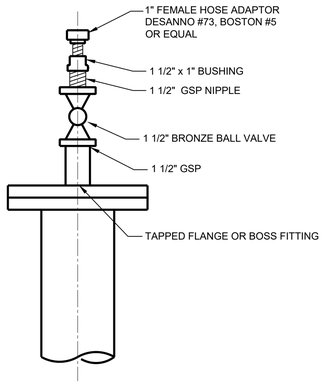

FLUSHING CONNECTION

M142 TYP

SCALE: NONE

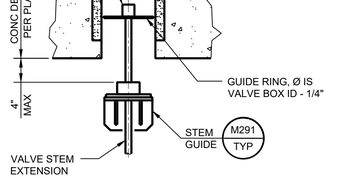

CONCRETE DECK

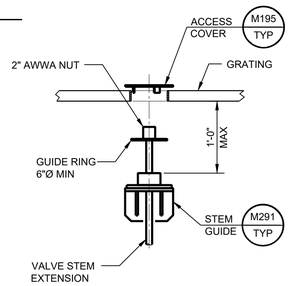

GRATING

2" AWWA NUT W/ ACCESS COVER

M192 TYP

SCALE: NONE

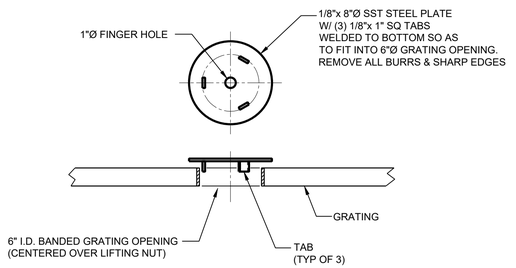

ACCESS COVER

M195 TYP

SCALE: NONE

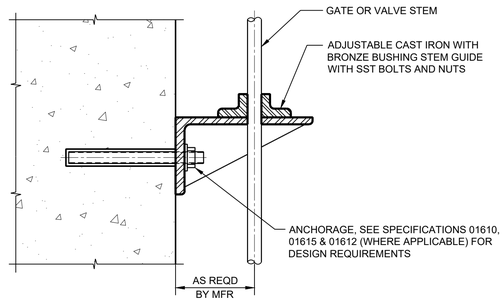

NOTE: ANCHORS SHALL BE STAINLESS STEEL

STEM GUIDE

M291 TYP

SCALE: NONE

Revision	By	Appd.	YY.MM.DD
BID SET	KM	GIA	2022.09.01
Issued	By	Appd	YYYY.MM.DD

Permit/Seal

REGISTERED PROFESSIONAL ENGINEER GABRIEL I. ARONOW No.55607 Exp.12/31/22 CIVIL STATE OF CALIFORNIA

09/01/2022

Consultant

Stantec

Stantec Consulting Services Inc.
3875 Atherton Road
Rocklin CA 95765-3716
Tel: (916) 773-8100
www.stantec.com

Copyright Reserved

The Contractor shall verify and be responsible for all dimensions. DO NOT scale the drawing - any errors or omissions shall be reported to Stantec without delay. The Copyrights to all designs and drawings are the property of Stantec. Reproduction or use for any purpose other than that authorized by Stantec is forbidden.

Client/Project Logo

Client/Project

City of San Juan Bautista

SANITARY SEWER FORCE MAIN TO HOLLISTER PROJECT

San Juan Bautista, California

File Name: 31441-M001 TO M007 | ASB Dwn. | KM Dsgn. | GIA Chkd. | 2022.09.01 YYYY.MM.DD

Title

TYPICAL MECHANICAL DETAILS

Project No. 184031441

Scale AS SHOWN

Revision 0

Sheet 82 of 128

Drawing No. M001

ORIGINAL SHEET - ANSI D

\\1184\corfnet\184031441\drawing\sct\31441-m001 to m007 2022.10.07 8:15:48 AM

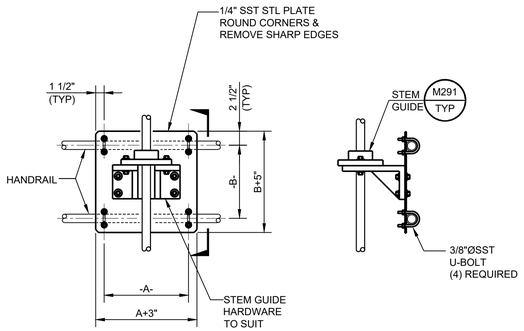

ELEVATION SECTION

RAIL MOUNTED STEM GUIDE

SCALE: NONE — M292 TYP

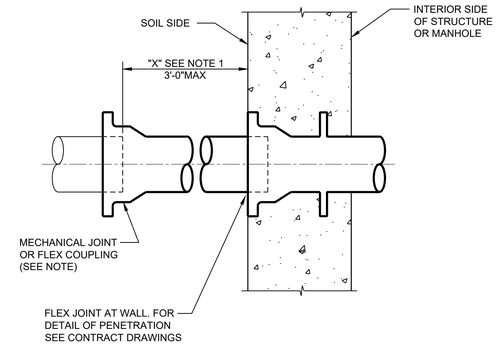

NOTES:

1. "X" = 18 INCHES OF PIPE OR INSIDE DIAMETER, WHICHEVER IS GREATER.

TYPICAL PIPING CONNECTION AT MANHOLE OR STRUCTURE

SCALE: NONE — M300 TYP

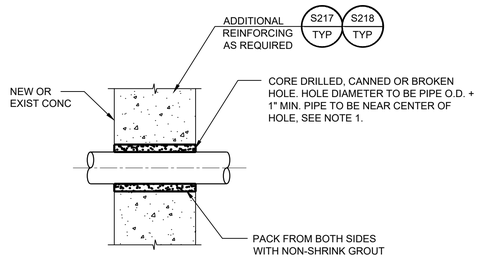

NOTES:

1. FOR ELEVATED FLOOR PENETRATIONS, WRAP WITH 3/8" THICK, 60 DUROMETER RUBBER SHEETING BEFORE POURING CONCRETE. SECURE TO PIPE WITH (2) STEEL BANDS.

GROUTED PIPE PENETRATION

SCALE: NONE — M301 TYP

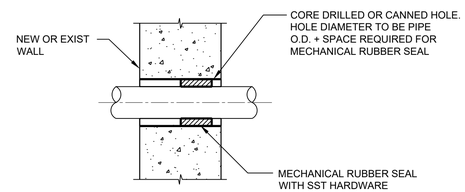

NOTES:

1. CAULK WET SIDE OF MECHANICAL SEAL FLUSH WITH WALL.
2. FOR WALLS THICKER THAN 12" PROVIDE (2) MECHANICAL RUBBER SEALS AND CAULK BOTH SIDES.

PIPE PENETRATION WITH RUBBER SEAL

SCALE: NONE — M302 TYP

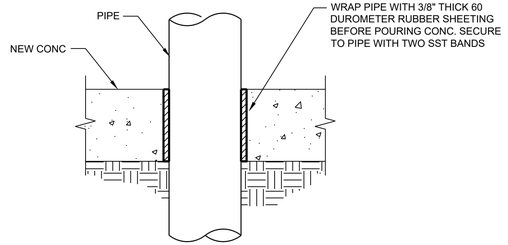

SLAB ON GRADE PIPE PENETRATION

SCALE: NONE — M303 TYP

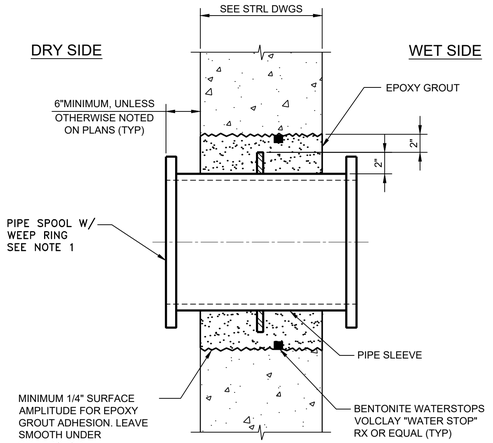

NOTES:

1. PIPE SPOOL SIZE AND CONNECTION TYPE PER PLANS. SPOOL MATERIAL AND COATING PER SPECIFICATIONS, MATCH ADJACENT PIPE.

EXISTING WALL PENETRATION DETAIL

SCALE: NONE — M304 TYP

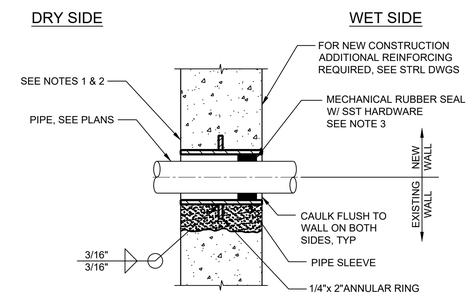

NOTES:

1. FOR EXISTING WALLS, CHIP OUT OPENING AS REQUIRED (MINIMUM 1/4" SURFACE AMPLITUDE FOR EPOXY GROUT ADHESION) CUT MINIMUM REBAR REQUIRED FOR WALL SLEEVE. COAT CONCRETE SURFACE WITH EPOXY BONDING AGENT AND GROUT IN SLEEVE WITH NON-SHRINK GROUT.
2. FOR NEW CONSTRUCTION, SLEEVES SHALL BE CAST INTO WALL. BLOCKOUTS AND SUBSEQUENT GROUTING IN OF SLEEVES WILL NOT BE PERMITTED UNLESS A KEYED WATERSTOP JOINT IS PROVIDED.
3. IN WALLS THICKER THAN 12", MECHANICAL RUBBER SEAL (LINK SEAL OR EQUAL) SHALL BE INSTALLED AT BOTH ENDS OF WALL SLEEVE. SLEEVE DIAMETER SHALL BE PER SEAL MANUFACTURER'S RECOMMENDATION. SUPPORT PIPE INDEPENDENTLY WHILE INSTALLING PIPE AND SEAL.
4. SEE SPECIFICATIONS FOR SLEEVE WALL THICKNESS.
5. SLEEVES SHALL BE HOT-DIP GALVANIZED AFTER FABRICATION.

WALL SLEEVE PENETRATION DETAIL

SCALE: NONE — M305 TYP

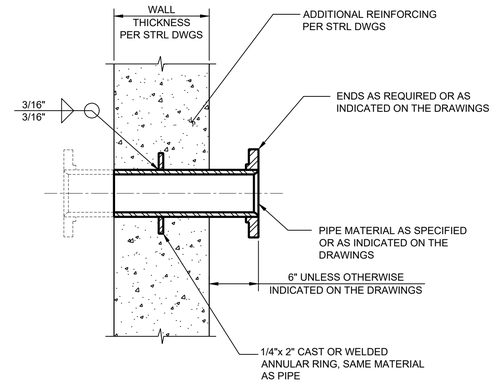

WALL PIPE PENETRATION DETAIL

SCALE: NONE — M306 TYP

Revision	By	Appd.	YY.MM.DD
BID SET	KM	GIA	2022.09.01
Issued	By	Appd	YYYY.MM.DD

Permit/Seal

REGISTERED PROFESSIONAL ENGINEER
GABRIEL I. ARONOW
No.55607
Exp.12/31/22
CIVIL
STATE OF CALIFORNIA
09/01/2022

Consultant

Stantec
Stantec Consulting Services Inc.
3875 Atherton Road
Rocklin CA 95765-3716
Tel: (916) 773-8100
www.stantec.com

Copyright Reserved
The Contractor shall verify and be responsible for all dimensions. DO NOT scale the drawing - any errors or omissions shall be reported to Stantec without delay.
The Copyrights to all designs and drawings are the property of Stantec. Reproduction or use for any purpose other than that authorized by Stantec is forbidden.

Client/Project Logo

Client/Project
City of San Juan Bautista

SANITARY SEWER FORCE MAIN
TO HOLLISTER PROJECT

San Juan Bautista, California

File Name: 31441-M001 TO M007 | ASB Dwn. | KM Dsgn. | GIA Chkd. | 2022.09.01 YYYY.MM.DD

Title
TYPICAL MECHANICAL DETAILS

Project No. 184031441
Scale AS SHOWN
Revision 0
Sheet 83 of 128
Drawing No. M002

ORIGINAL SHEET - ANSI D
\\1JMD\active\184031441\drawing\sct\31441-m001 to m007 2022.10.05 2:17:17 PM

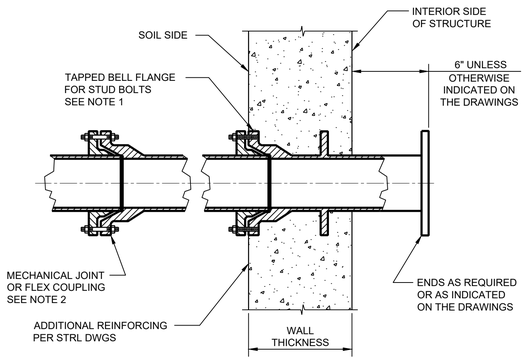

NOTES:

1. FILL TAPPED HOLES WITH CORK OR SPONGE RUBBER TO PREVENT FILLING WITH CONCRETE.
2. MECHANICAL JOINT (MJ) OR FLEX COUPLING (FC) AT EDGE OF EXCAVATION OR 3'-0" MAX FROM STRUCTURE. IF EDGE OF EXCAVATION IS GREATER THAN 6' FROM STRUCTURE, PROVIDE SECOND MJ OR FC AT EDGE OF EXCAVATION. PROVIDE SECOND MJ OR FC WHETHER OR NOT SHOWN ON PLANS.

MECHANICAL JOINT WALL PIPE DETAIL

SCALE: NONE

M307 TYP

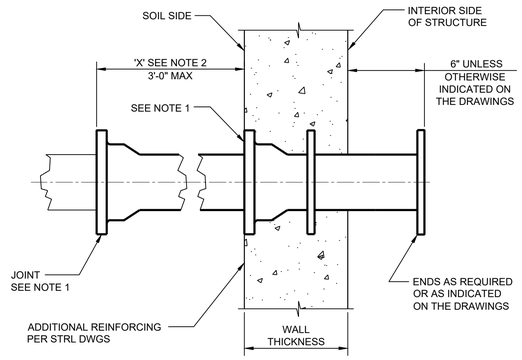

NOTES:

1. WALL PIPE MAY BE CAST OR FABRICATED FROM PUSH-ON JOINT PIPE WITH WELDED WEEP RING.
2. 'X'= 18" OF PIPE OR INSIDE DAIMETER. WHICHEVER IS GREATER.

DUCTILE IRON WALL PIPE DETAIL

SCALE: NONE

M308 TYP

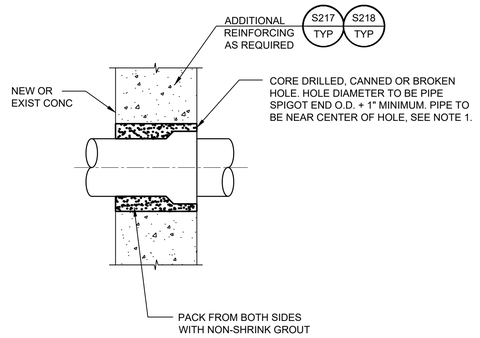

NOTES:

1. CONTRACTOR SHALL VERIFY SHAPE AND SIZE OF PIPE SPIGOT PRIOR TO POURING OF CONCRETE.

BELL & SPIGOT CLAY PIPE GROUTED PIPE PENETRATION

SCALE: NONE

M309 TYP

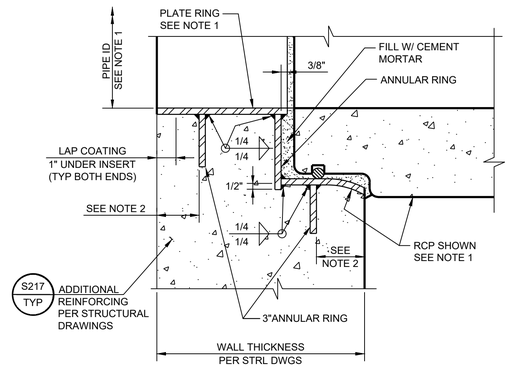

NOTES:

1. CONTRACTOR SHALL VERIFY SHAPE AND SIZE OF PIPE SPIGOT PRIOR TO FABRICATION OF BELL RING. MATERIAL THICKNESS VARIES WITH DIAMETER: 14"-24" : 1/4" PLATE, 26"-36" : 5/16" PLATE, >36" : 3/8" PLATE.
2. REINFORCING BAR COVER PLUS DIAMETER OF OUTSIDE BARS.
3. GRIND SMOOTH ALL METAL EDGES IN AREAS TO BE COATED AND ALL SURFACES IN PIPE SEATING AREA. COAT PER SPECIFICATIONS.
4. INSTALL SPIDER BRACING AT POINT OF MANUFACTURE. BRACING SHALL NOT BE REMOVED UNTIL INSERT HAS BEEN CAST IN PLACE.
5. SIMILAR FOR VCP, PVC AND MLCS.

BELL RING INSERT DETAIL

SCALE: NONE

M310 TYP

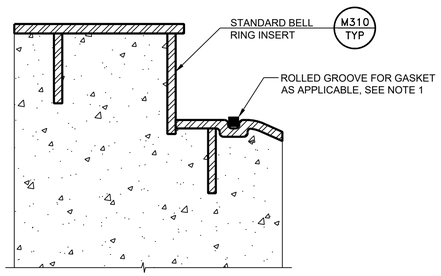

NOTES:

1. ROLLED GROOVE RING PLATE MAY BE THINNER AS APPROVED BY THE ENGINEER.

STEEL BELL RING FOR DIP OR PVC DETAIL

SCALE: NONE

M311 TYP

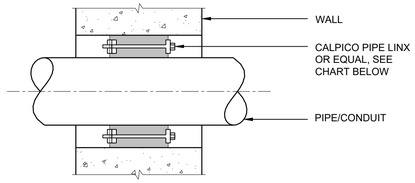

PIPE LINX CHART			
PIPE DIA.	CORE DIA.	MODEL CSL #	# OF LINKS
1"Ø	2.5"Ø	20	5
2"Ø	4"Ø	30	6
3"Ø	6"Ø	30	9
4"Ø	6"Ø	30	11
6"Ø	10"Ø	40	7

LINX SEAL

SCALE: NONE

M315 TYP

PIPE SUPPORTS:

1. WHERE NO REFERENCE TO PIPE HANGERS OR SUPPORTS IS INDICATED ON THE DRAWINGS, THE CONTRACTOR SHALL USE THE APPROPRIATE HANGER OR SUPPORT SHOWN ON THE TYPICAL DETAILS. MAXIMUM HANGER AND SUPPORT SPACING SHALL BE AS SHOWN IN SCHEDULE "A" ON THIS DRAWING. FIGURE NUMBERS ARE B-LINE, UNISTRUT OR GRINNELL.
2. ALL CONCRETE INSERTS, BRACKETS, CHANNELS BOLTS, RODS, AND MISCELLANEOUS HARDWARE USED FOR PIPE HANGERS OR SUPPORTS SHALL BE STAINLESS STEEL IF SUPPORTS ARE SUBMERGED OR LOCATED BELOW THE TOP OF WALL IN WATER BEARING STRUCTURES. IN OTHER AREAS, UNLESS NOTED OTHERWISE, SUPPORTS SHALL BE HOT DIP GALVANIZED.
3. CONCRETE CONTINUOUS INSERTS, B-LINE SERIES B521, OR EQUAL, SHALL BE PROVIDED IN THE WALLS AND CEILINGS ONLY WHERE SPECIFICALLY INDICATED ON THE DRAWINGS OR WHERE APPROVED BY THE ENGINEER. CONCRETE CHANNEL INSERTS SHALL NOT BE USED IN SUBMERGED LOCATIONS OR BELOW THE TOP OF WALL IN WATER BEARING STRUCTURES. INSERTS IN THE WALLS SHALL BE VERTICAL, UNLESS OTHERWISE NOTED AND SHALL BEGIN 6 INCHES ABOVE THE FLOOR AND END 6 INCHES BELOW THE CEILING. INSERTS IN THE CEILING SHALL BEGIN AND END 3 INCHES FROM WALLS AND BEAMS, WHERE PRACTICAL. THE CENTERLINES OF WALL AND CEILING INSERTS SHALL ALIGN. MAXIMUM CENTER TO CENTER SPACING OF INSERTS SHALL BE 5'-0".
4. IN AREAS OTHER THAN WALLS AND CEILINGS AS DESCRIBED IN NOTE 3, CONCRETE INSERTS SHALL BE B-LINE SERIES B3014N WITH APPROPRIATE NUT, B-LINE SERIES B5211 CHANNEL EMBEDDED ANCHOR BOLTS, OR EQUAL.
5. CONCRETE INSERTS IN AREAS BELOW WATER SURFACE OR NORMALLY SUBJECT TO SUBMERGING SHALL BE EMBEDDED ANCHOR BOLTS, OR APPROVED EQUAL.
6. SUPPORTS SHALL MEET MANUFACTURERS STANDARDIZATION SOCIETY OF THE VALVE AND FITTINGS INDUSTRY STANDARD PRACTICE SP58, LATEST EDITION.
7. HANGER BRACKET AND SUPPORT COMPONENTS MAY BE INTERCHANGED AS APPROVED BY THE ENGINEER.
8. TRAPEZE AND PIPE RACK COMPONENTS SHALL HAVE A MINIMUM STEEL THICKNESS OF 12 GAUGE. MAXIMUM DEFLECTION SHALL BE LIMITED TO 1/240 OF THE SPAN OR AS RECOMMENDED BY THE MANUFACTURER, WHICHEVER IS MORE STRINGENT. CHANNEL COMPONENTS SHALL BE B-LINE SERIES B22 OR B22A, OR EQUAL.
9. ALL PIPING, DUCTWORK, ACCESSORIES, APPURTENANCES, ETC. SHALL BE ANCHORED TO RESIST LOADS DEFINED IN SPECIFICATION SECTIONS 01610, 01612, AND 01615 WITHOUT EXCESSIVE DEFLECTION.
10. CONTRACTOR SHALL VERIFY ALL SUPPORT DIMENSIONS AND LOCATIONS WITH APPROVED SHOP DRAWINGS FOR ITEMS BEING SUPPORTED BEFORE FABRICATION OR INSTALLATION OF SUPPORTS.
11. FIELD PAINT ALL GALVANIZED STEEL IN ACCORDANCE WITH THE SPECIFICATIONS.
12. FOR STAINLESS STEEL PIPE, ALL PIPE SUPPORT MATERIALS SHALL BE TYPE "L" STAINLESS STEEL.

SCHEDULE "A"

PIPE HANGER RODS AND SUPPORT SPACING

PIPE SIZE	ROD SIZE (INCHES)	MAX. SPAN (FT.)				
		STEEL PIPE	COPPER PIPE	PVC PIPE	DUCTILE IRON PIPE	FIBERGLASS
UP TO 1"	3/8	6	5	5	-	-
1 1/4" TO 2"	3/8	10	8	5.5	10	-
2 1/2" TO 3 1/2"	1/2	10	8	6	10	-
4" TO 5"	5/8	10	-	8	10	-
6"	3/4	10	-	9	10	-
8" TO 12"	7/8	10	-	9	10	-
ABOVE 12"	1	10	-	9	10	-

13. IF SUPPORT IS SUBMERGED OR LOCATED BELOW THE TOP OF WALL IN WATER BEARING STRUCTURE, MATERIAL FOR ENTIRE SUPPORT (INCLUDING ANCHOR BOLTS, PIPE, AND BRACKETS) SHALL BE STAINLESS STEEL. IN ALL OTHER AREAS, MATERIAL FOR ANCHOR BOLTS, PIPE, AND BRACKETS SHALL BE HOT-DIP GALVANIZED STEEL, UNLESS OTHERWISE NOTED ON THE DRAWINGS.
14. THESE TYPICAL DETAILS ARE TO BE USED FOR GENERAL GUIDANCE AND LAYOUT FOR SUPPORT SYSTEMS. SUPPORT SYSTEMS SHOWN ON DETAILS AND OR DRAWINGS ARE MINIMUMS, INCLUDING SPACING. DESIGN FOR THESE SUPPORT SYSTEMS SHALL BE PROVIDED IN A SUBMITTAL. SUBMITTAL SHALL INCLUDE DETAILS AND CALCULATIONS STAMPED AND SIGNED BY A CIVIL OR STRUCTURAL ENGINEER REGISTERED IN THE STATE OF CALIFORNIA.

PIPE SUPPORT - NOTES & SCHEDULE

SCALE: NONE

M400 TYP

ORIGINAL SHEET - ANSI D

\\<\MKR\conf\ws\184031441\dtswrg\sct\31441-m001 to m007 2022.09.01 2:17:53 PM

Revision	By	Appd.	YY.MM.DD

Issued	By	Appd	YYYY.MM.DD
BID SET	KM	GIA	2022.09.01

Permit/Seal

REGISTERED PROFESSIONAL ENGINEER GABRIEL I. ARONOW No.55607 Exp.12/31/22 CIVIL STATE OF CALIFORNIA

09/01/2022

Consultant

Stantec

Stantec Consulting Services Inc.
3875 Atherton Road
Rocklin CA 95765-3716
Tel: (916) 773-8100
www.stantec.com

Copyright Reserved

The Contractor shall verify and be responsible for all dimensions. DO NOT scale the drawing - any errors or omissions shall be reported to Stantec without delay.
The Copyrights to all designs and drawings are the property of Stantec. Reproduction or use for any purpose other than that authorized by Stantec is forbidden.

Client/Project Logo

Client/Project

City of San Juan Bautista

SANITARY SEWER FORCE MAIN TO HOLLISTER PROJECT

San Juan Bautista, California

File Name: 31441-M001 TO M007

ASB	KM	GIA	2022.09.01
Dwn.	Dsgn.	Chkd.	YYYY.MM.DD

Title

TYPICAL MECHANICAL DETAILS

Project No. 184031441

Scale AS SHOWN

Revision 0

Sheet 84 of 128

Drawing No. M003

ADJUSTABLE PIPE SADDLE SUPPORT SCHEDULE DIMENSIONS IN INCHES					
SIZE OF SUPPORTED PIPE	PIPE SIZE "A"	PIPE SIZE "B"	"C"	"D"	
				MINIMUM	MAXIMUM
8	3	2 1/2	9	11 1/2	16 1/2
10	3	2 1/2	9	13 1/2	18 1/2
12	3	2 1/2	9	15	19 1/2
14	4	3	11	16 1/2	20 1/2
16	4	3	11	17 1/2	22 1/2
18	4	3 1/2	13 1/2	19 1/2	24
20	4	3 1/2	13 1/2	21	25 1/2
24	6	4	13 1/2	23 1/2	28 1/2
30	6	4	13 1/2	27	31 1/2
32	6	4	13 1/2	28 1/2	32 1/2
36	6	4	13 1/2	30 1/2	34 1/2

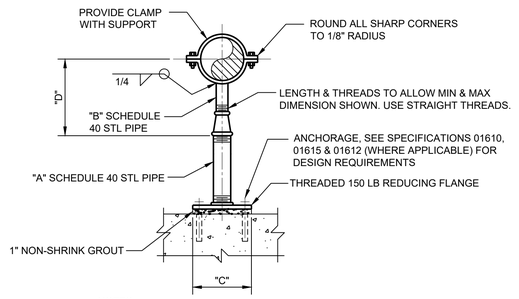

NOTES:

1. HOT-DIP GALVANIZE AFTER FABRICATION.
2. ANCHORS SHALL BE STAINLESS STEEL.

ADJUSTABLE PIPE SUPPORT (>6")

SCALE: NONE

M402 TYP

ADJUSTABLE PIPE SUPPORT SCHEDULE				
SIZE OF SUPPORTED PIPE	EXTENSION PIPE SIZE "A" SCH 40	BASE PLATE SIZE	MINIMUM DIST. FROM FLANGE TO FLOOR "B"	THREADED STUD "C" DIAMETER
2	2"	4"x 6"x 1/4"	7"	1"
2 1/2	2"	4"x 6"x 1/4"	7"	1"
3	2"	4"x 6"x 1/4"	7"	1"
4	2"	4"x 6"x 1/4"	7"	1"
6	2"	4"x 6"x 1/4"	7"	1"
8	2"	4"x 6"x 1/4"	7"	1"
10	2"	4"x 6"x 1/4"	7"	1"
12	2"	4"x 6"x 1/4"	7"	1"
14	3"	8"x 8"x 1/2"	9 1/2"	1 1/2"
16	3"	8"x 8"x 1/2"	9 1/2"	1 1/2"
18	4"	8"x 8"x 1/2"	10"	2"
20	4"	8"x 8"x 1/2"	10"	2"
24	4"	8"x 8"x 1/2"	10"	2"
30	6"	13 1/2"x 13 1/2"x 1/2"	12"	2"
36	6"	13 1/2"x 13 1/2"x 1/2"	16"	2 1/2"
42	8"	16"x 16"x 1/2"	18"	2 1/2"
48	8"	16"x 16"x 1/2"	18"	2 1/2"

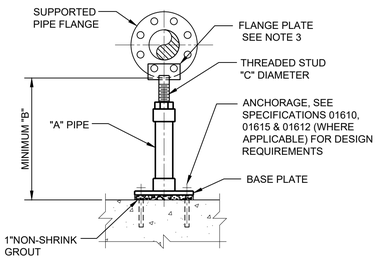

NOTES:

1. MATERIAL OF FABRICATION ASTM A35 & A53 STEEL WITH ELECTRO-GALVANIZED FINISH OR AS SPECIFIED ON THE DRAWING.
2. STANDON MODEL S89 FLANGE SUPPORT OR EQUAL. SUPPORT DOES NOT SERVE AS SEISMIC OR THRUST SUPPORT.
3. TWO BOLTS UP TO 10". 45° THEREAFTER

ADJUSTABLE PIPE SUPPORT AT FLANGE (2" TO 48")

SCALE: NONE

M404 TYP

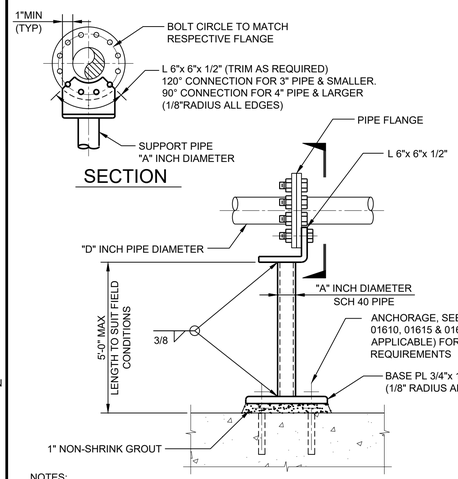

"A"	"D"
2"	4"
2 1/2"	6"
4"	8"

NOTES:

1. MAXIMUM VERTICAL LOAD = 1000 POUNDS.
2. IF SUPPORT IS SUBMERGED OR LOCATED BELOW THE TOP OF WALL IN WATER BEARING STRUCTURE, MATERIAL FOR ANCHOR BOLTS, PIPE, AND L 6" x 6" x 1/2" SHALL BE STAINLESS STEEL. IN ALL OTHER AREAS, MATERIAL FOR ANCHOR BOLTS, PIPE, AND L 6" x 6" x 1/2" SHALL BE HOT-DIP GALVANIZED STEEL UNLESS OTHERWISE INDICATED ON THE DRAWINGS.
3. FIELD PAINT GALVANIZED STEEL PER THE SPECIFICATIONS.

FLANGED PIPE SUPPORT

SCALE: NONE

M405 TYP

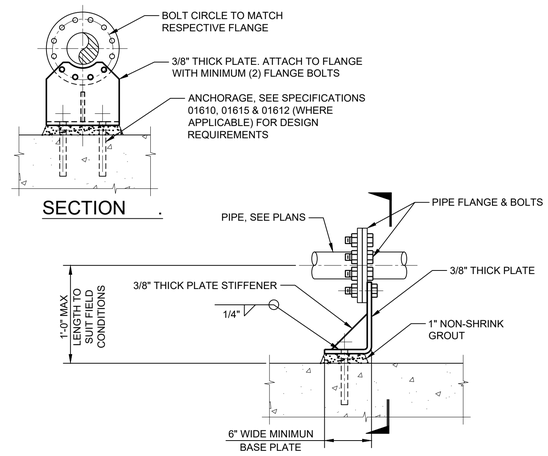

NOTES:

1. MAXIMUM VERTICAL LOAD = 1000 POUNDS. SEE PIPE SUPPORT NOTES AND SCHEDULES DETAIL M400
2. IF SUPPORT IS SUBMERGED OR LOCATED BELOW THE TOP OF WALL IN WATER BEARING STRUCTURE, MATERIAL FOR ANCHOR BOLTS, PIPE, AND 3/8" PLATE SHALL BE STAINLESS STEEL. IN ALL OTHER AREAS, MATERIAL FOR ANCHOR BOLTS, PIPE, AND 3/8" PLATE SHALL BE HOT-DIP GALVANIZED STEEL UNLESS OTHERWISE INDICATED ON THE DRAWINGS.
3. FIELD PAINT GALVANIZED STEEL PER THE SPECIFICATIONS.

< 8" FLANGED PIPE SUPPORT

SCALE: NONE

M406 TYP

NOTES:

1. PIPE SUPPORT FOR USE WITH 8"Ø OR SMALLER PIPE.
   - FOR 8" PIPE, USE 4"Ø SCH 40 PIPE FOR SUPPORT
   - FOR 6" PIPE, USE 21/2"Ø SCH 40 PIPE FOR SUPPORT
   - FOR 4" PIPE, USE 2"Ø SCH 40 PIPE FOR SUPPORT
2. HOT-DIP GALVANIZE SUPPORT AFTER FABRICATION. FIELD PAINT IN ACCORDANCE WITH THE SPECIFICATIONS.

STEEL / DUCTILE BASE SUPPORT DETAIL

SCALE: NONE

M407 TYP

SUPPORT PIPE SCHEDULE	
"D"	"A"
4"	2"
6"	3"
8"	4"
10"	4"
12"	6"

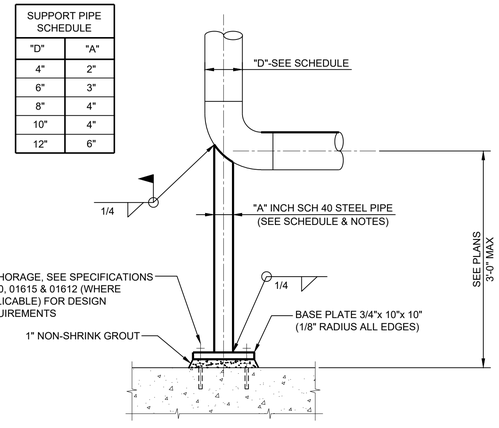

NOTES:

1. PAINT STEEL PIPE SUPPORTS PER COATINGS SPECIFICATIONS.
2. FOR STAINLESS STEEL PIPE, ALL PIPE SUPPORT MATERIALS SHALL BE TYPE "L" (LOW CARBON) STAINLESS STEEL TO MATCH PIPE.

STEEL PIPE SUPPORT

SCALE: NONE

M408 TYP

ADJUSTABLE PIPE SUPPORT (PIPE < 10")

SCALE: NONE

M410 TYP

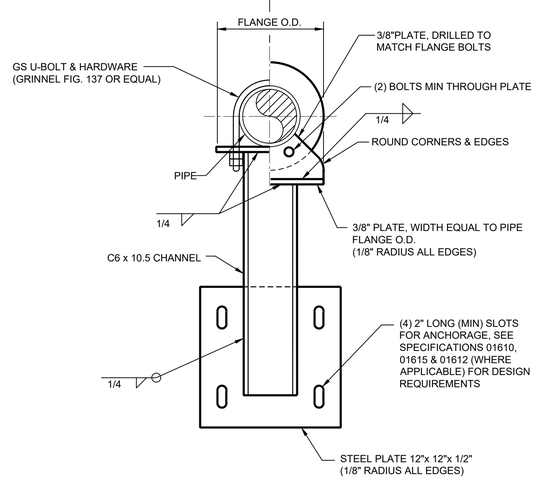

NOTES:

1. HOT-DIP GALVANIZED STEEL UNLESS INDICATED OTHERWISE ON THE DRAWINGS.

SIDE MOUNT PIPE SUPPORT (PIPE ≤ 8")

SCALE: NONE

M411 TYP

Revision	By	Appd.	YY.MM.DD

Issued	By	Appd	YYYY.MM.DD
BID SET	KM	GIA	2022.09.01

Permit/Seal

REGISTERED PROFESSIONAL ENGINEER GABRIEL I. ARONOW No.55607 Exp.12/31/22 CIVIL STATE OF CALIFORNIA

09/01/2022

Consultant

Stantec

Stantec Consulting Services Inc.
3875 Atherton Road
Rocklin CA 95765-3716
Tel: (916) 773-8100
www.stantec.com

Copyright Reserved

The Contractor shall verify and be responsible for all dimensions. DO NOT scale the drawing - any errors or omissions shall be reported to Stantec without delay. The Copyrights to all designs and drawings are the property of Stantec. Reproduction or use for any purpose other than that authorized by Stantec is forbidden.

Client/Project Logo

Client/Project

City of San Juan Bautista

SANITARY SEWER FORCE MAIN TO HOLLISTER PROJECT

San Juan Bautista, California

File Name: 31441-M001 TO M007	ASB	KM	GIA	2022.09.01
	Dwn.	Dsgn.	Chkd.	YYYY.MM.DD

Title

TYPICAL MECHANICAL DETAILS

Project No.	Scale
184031441	AS SHOWN
Revision 0	Sheet 85 of 128
	Drawing No. M004

ORIGINAL SHEET - ANSI D

\\<\MKR\cef\ne\184031441\ultimate\cad\31441-m001 to m007
2022.10.05 2:18:49 PM

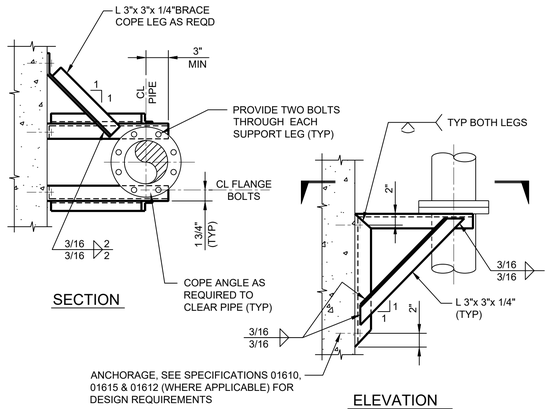

NOTES:

1. PIPE SUPPORT IS TO BE USED FOR 4"Ø AND LARGER PIPES. FOR SUPPORTS NOT AT FLANGES USE RISER CLAMPS ONE SIDE WELDED TO SUPPORTS.
2. MAXIMUM ALLOWABLE VERTICAL LOAD = 900 POUNDS PER SUPPORT. ADJUST SUPPORTS SPACING AS REQUIRED.
3. ALL MATERIAL SHALL BE STAINLESS STEEL IF SUPPORT IS SUBMERGED OR LOCATED BELOW THE TOP OF WALL IN A WATER BEARING STRUCTURE. IN ALL OTHER AREAS, THE MATERIALS SHALL BE HOT-DIP GALVANIZED STEEL UNLESS OTHERWISE INDICATED ON THE DRAWINGS.
4. FIELD PAINT GALVANIZED STEEL PER THE SPECIFICATIONS.

VERTICAL PIPE SUPPORT

SCALE: NONE — M432 TYP

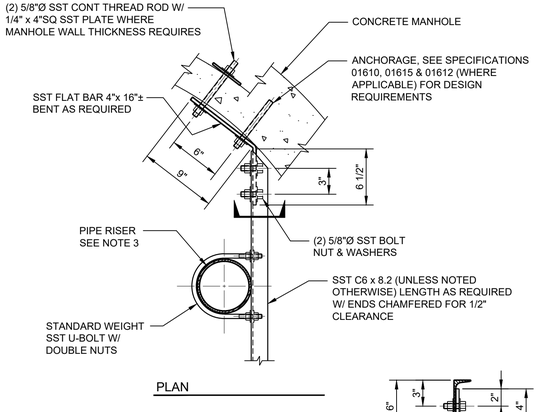

NOTES:

1. COAT ALL METAL IN CONTACT WITH CONCRETE PER SPECIFICATIONS.
2. FILL ANY GAPS BETWEEN BRACKET AND MANHOLE WALL WITH NON-SHRINK GROUT.
3. THIS DETAIL IS ALLOWED FOR RISERS 8"Ø≤. SECURE PIPE RISER VERTICALLY WITH U-BOLT.

VERTICAL PIPE SUPPORT IN MANHOLES

SCALE: NONE — M433 TYP

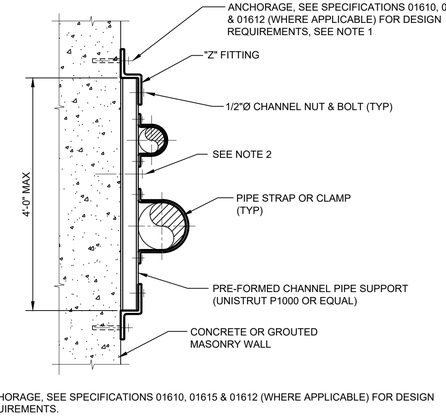

NOTES:

1. ANCHORAGE, SEE SPECIFICATIONS 01610, 01615 & 01612 (WHERE APPLICABLE) FOR DESIGN REQUIREMENTS.
2. FOR SUPPORT LENGTH GREATER THAN 2'-0" PROVIDE ADDITIONAL ANCHOR BOLT.
3. MAXIMUM PIPE SIZE 4"Ø.
4. SPACE FLUSH MOUNT PIPE SUPPORTS AT 5'-0" MAXIMUM OR AS OTHERWISE INDICATED ON THE DRAWINGS.
5. IF SUPPORT IS SUBMERGED OR LOCATED BELOW THE TOP OF WALL IN WATER BEARING STRUCTURE, ALL MATERIAL SHALL BE STAINLESS STEEL. IN ALL OTHER AREAS, MATERIALS SHALL BE HOT-DIP GALVANIZED STEEL UNLESS OTHERWISE INDICATED ON THE DRAWINGS.
6. FIELD PAINT GALVANIZED STEEL PER THE SPECIFICATIONS.

FLUSH MOUNT PIPE SUPPORT (≤ 4"Ø)

SCALE: NONE — M440 TYP

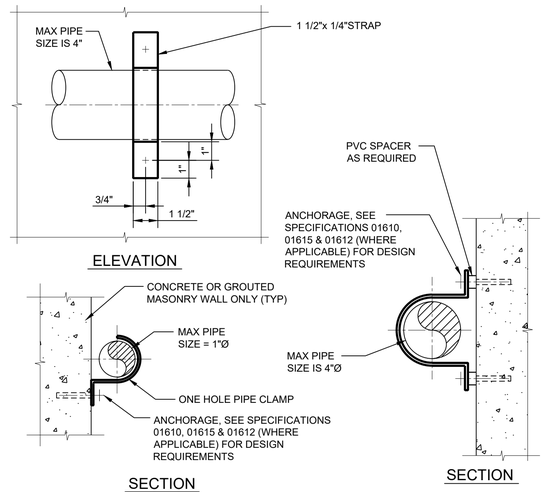

NOTES:

1. ALL MATERIAL SHALL BE STAINLESS STEEL IF SUPPORT IS SUBMERGED OR LOCATED BELOW THE TOP OF WALL IN A WATER BEARING STRUCTURE. IN ALL OTHER AREAS, THE MATERIALS SHALL BE HOT-DIP GALVANIZED STEEL UNLESS OTHERWISE INDICATED ON THE DRAWINGS.
2. FIELD PAINT GALVANIZED STEEL PER THE SPECIFICATIONS.

CLAMP PIPE SUPPORT (≤ 4"Ø)

SCALE: NONE — M441 TYP

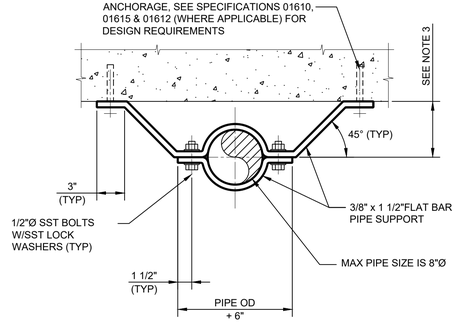

NOTES:

1. ALL MATERIAL SHALL BE STAINLESS STEEL IF SUPPORT IS SUBMERGED OR LOCATED BELOW THE TOP OF WALL IN A WATER BEARING STRUCTURE. IN ALL OTHER AREAS, THE MATERIALS SHALL BE HOT-DIP GALVANIZED STEEL UNLESS OTHERWISE INDICATED ON THE DRAWINGS.
2. FIELD PAINT GALVANIZED STEEL PER THE SPECIFICATIONS.
3. OFFSET DIMESNION SHALL BE PIPE OUTSIDE DIAMETER OR IN THE CASE OF FLANGED PIPE, THE FLANGE OUTSIDE DIAMETER / 2 + 1". UNLESS OTHERWISE NOTED ON THE DRAWINGS.

BAR STRAP PIPE SUPPORT

SCALE: NONE — M442 TYP

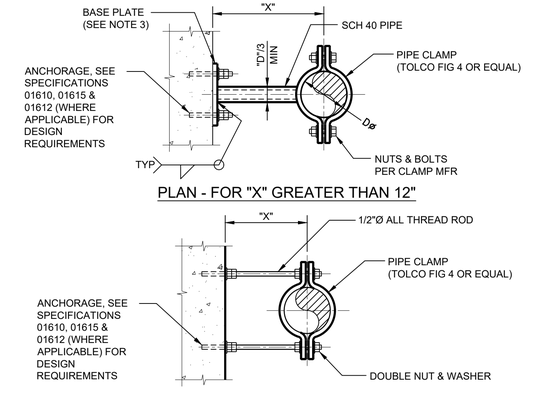

NOTES:

1. SWAY BRACES SHOWN ARE FOR 12" AND SMALLER PIPE.
2. SWAY BRACE SHALL NOT SUPPORT VERTICAL LOADS.
3. FOR 8" AND SMALLER PIPE, USE 1/4" x "D"+2" SQUARE PLATE. FOR 10" AND LARGER PIPE, USE 1/2" x "D"+2" SQUARE PLATE.
4. ALL MATERIAL SHALL BE STAINLESS STEEL IF SUPPORT IS SUBMERGED OR LOCATED BELOW THE TOP OF WALL IN A WATER BEARING STRUCTURE. IN ALL OTHER AREAS, THE MATERIALS SHALL BE HOT-DIP GALVANIZED STEEL. UNLESS OTHERWISE INDICATED ON THE DRAWINGS.
5. FIELD PAINT GALVANIZED STEEL PER THE SPECIFICATIONS.

VERTICAL PIPE SWAY BRACE

SCALE: NONE — M443 TYP

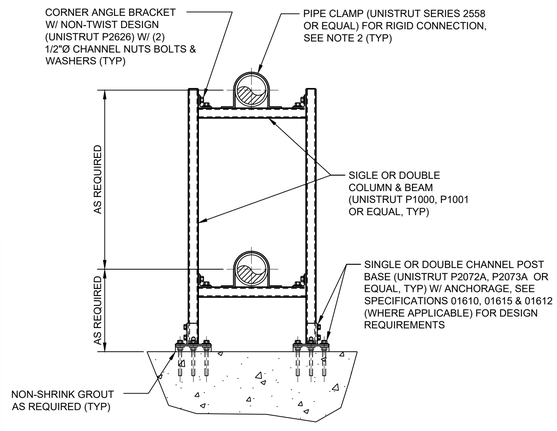

NOTES:

1. LOADS SHALL NOT EXCEED MANUFACTURER'S RECOMMENDATIONS.
2. MATERIALS OF CONSTRUCTION SHALL BE 304 STAINLESS STEEL, UNLESS INDICATED OTHERWISE ON THE DRAWINGS.
3. WHEN PIPE CLAMPS CANNOT BE USED, WITH ENGINEERS APPROVAL, BENT PLATE BOLTED TO PIPE AND CHANNEL SIMILAR TO TYPICAL DETAIL M405 MAY BE USED. — M405 TYP

PIPE (≤ 12"Ø) & EQUIPMENT SUPPORT DETAIL

SCALE: NONE — M444 TYP

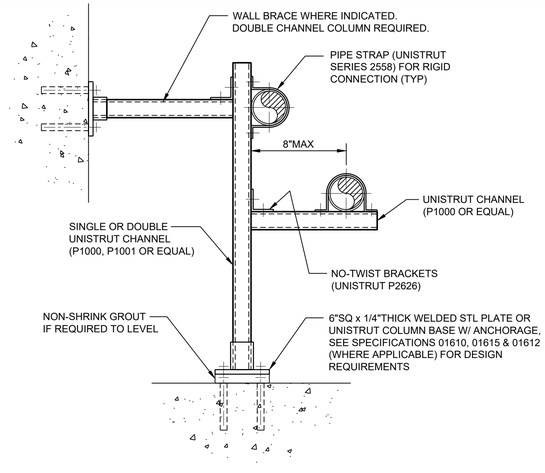

NOTES:

1. LOADS SHALL NOT EXCEED MANUFACTURER'S RECOMMENDATIONS.
2. MATERIALS OF CONSTRUCTION SHALL BE 304 STAINLESS STEEL UNLESS INDICATED OTHERWISE ON THE DRAWINGS.

COLUMN PIPE SUPPORT

SCALE: NONE — M446 TYP

Revision	By	Appd.	YY.MM.DD

BID SET / Issued	KM By	GIA Appd	2022.09.01 YYYY.MM.DD

Permit/Seal

REGISTERED PROFESSIONAL ENGINEER
GABRIEL T. ARONOW
No. 55607
Exp.12/31/22
CIVIL
STATE OF CALIFORNIA

09/01/2022

Consultant

Stantec

Stantec Consulting Services Inc.
3875 Atherton Road
Rocklin CA 95765-3716
Tel: (916) 773-8100
www.stantec.com

Copyright Reserved
The Contractor shall verify and be responsible for all dimensions. DO NOT scale the drawing - any errors or omissions shall be reported to Stantec without delay.
The Copyrights to all designs and drawings are the property of Stantec. Reproduction or use for any purpose other than that authorized by Stantec is forbidden.

Client/Project Logo

Client/Project

City of San Juan Bautista

SANITARY SEWER FORCE MAIN
TO HOLLISTER PROJECT

San Juan Bautista, California

File Name: 31441-M001 TO M007 | ASB Dwn. | KM Dsgn. | GIA Chkd. | 2022.09.01 YYYY.MM.DD

Title

TYPICAL MECHANICAL DETAILS

Project No. 184031441 | Scale AS SHOWN

Revision 0 | Sheet 86 of 128 | Drawing No. M005

v:\1840\active\184031441\drawing\oct\31441-m001 to m007 2022.10.06 4:09:41 PM
ORIGINAL SHEET - ANSI D

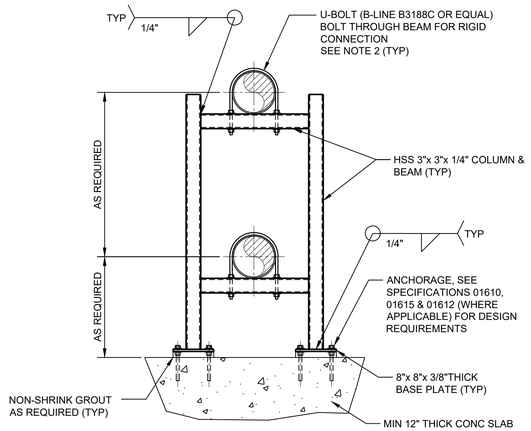

NOTES:

1. SEE PIPE SUPPORT NOTES & SCHEDULES M400/TYP. (M400 TYP)
2. MATERIALS OF CONSTRUCTION SHALL BE 304 STAINLESS STEEL, UNLESS INDICATED OTHERWISE ON THE DRAWINGS.
3. WHEN PIPE CLAMPS CANNOT BE USED, WITH ENGINEERS APPROVAL, BENT PLATE BOLTED TO PIPE AND CHANNEL SIMILAR TO TYPICAL DETAIL M405 MAY BE USED. (M405 TYP)

PIPE (> 12"Ø) & EQUIPMENT SUPPORT DETAIL

SCALE: NONE — M447 TYP

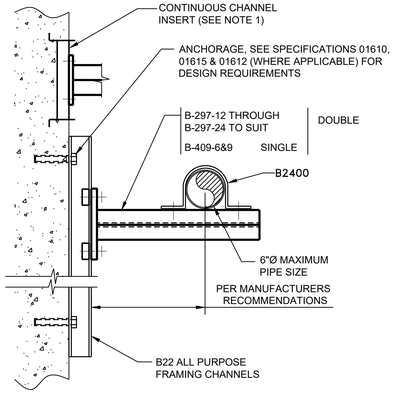

NOTES:

1. CONTINUOUS INSERT SHALL BE USED ONLY WHERE SHOWN ON THE DRAWINGS OR WHERE SPECIFICALLY APPROVED BY THE ENGINEER.
2. CONCRETE CHANNEL INSERTS SHALL NOT BE USED IN SUBMERGED LOCATIONS OR BELOW TOP OF WALL IN WATER BEARING STRUCTURES.
3. PROVIDE 316 SST IN SEWAGE TREATMENT BASIN AREAS. ALL ELSE, HOT-DIP GALVANIZED STEEL UNLESS INDICATED OTHERWISE ON THE DRAWINGS.

FRAMING CHANNEL PIPE HANGER

SCALE: NONE — M450 TYP

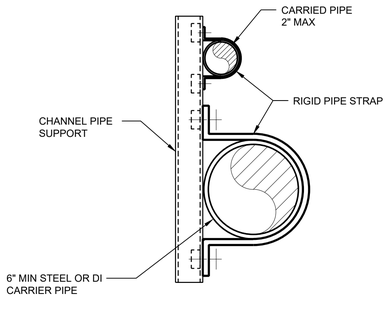

NOTES:

1. ALL PIPE SUPPORT MATERIALS SHALL BE TYPE 304 OR 316 SST
2. DESIGN AND FABRICATION AS APPROVED BY ENGINEER.

PIPE SUPPORTED ON CARRIER PIPE

SCALE: NONE — M455 TYP

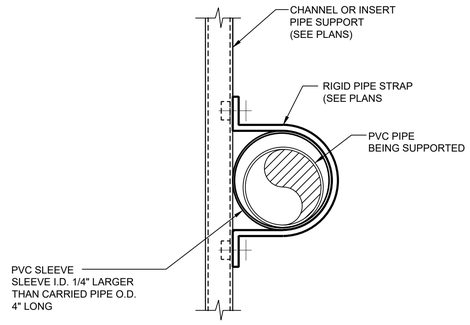

NOTES:

1. ALL PIPE SUPPORT MATERIALS SHALL BE TYPE 304 OR 316 SST
2. DESIGN AND FABRICATION AS APPROVED BY ENGINEER.

PVC SLEEVE PIPE HANGER

SCALE: NONE — M456 TYP

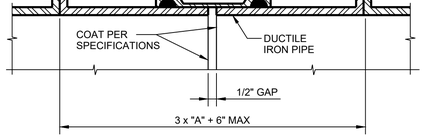

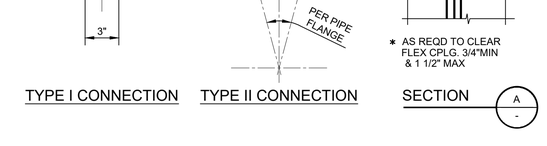

TYPE I CONNECTION — TYPE II CONNECTION — SECTION A-A

ROD SCHEDULE FOR DIP		
PIPE THRUST SEE NOTE 2	TYPE OF CONNECTION	NO RODS
0-6,000#	I	2
6,001-12,000#	II	2
12,001-18,000#	II	3
18,001-24,000#	II	4
24,001-30,000#	II	5
> 30,000 #	II	SEE NOTE 5

NOTES:

1. ALL EXPOSED FLEXIBLE COUPLINGS SHALL HAVE TIE RODS UNLESS SPECIFICALLY INDICATED OTHERWISE ON THE DRAWINGS.
2. CALCULATE PIPE THRUST BASED ON TEST PRESSURE.
3. PIPE THRUST = 0.7854 x D^2 x TEST PRESSURE (PSI), WHERE D IS PIPE OD IN INCHES.
4. MINIMUM YIELD STRENGTH FOR TIE ROD SHALL BE 48,000 PSI.
5. FOR THRUSTS GREATER THAN 30,000 POUNDS, ADD ONE 3/4 INCH DIAMETER ROD FOR EVERY 6,000 POUNDS INCREASING THRUST.
6. CONTRACTOR MAY USE ONE INCH DIAMETER ROD FOR THRUSTS GREATER THAN 30,000 POUNDS. NUMBER OF ONE INCH RODS = NUMBER OF 3/4 INCH RODS x 0.5625, ROUNDED OFF TO THE NEXT LARGER NUMBER.
7. ALL ROD CONNECTIONS SHALL BE TYPE II FOR THRUSTS GREATER THAN 30,000\POUNDS.
8. GRIND ALL CORNERS OF ANCHOR PLATES SMOOTH.
9. FLEXIBLE COUPLINGS SHALL BE COATED PER SPECIFICATIONS.
10. ALL BURIED MATERIALS SHALL BE STAINLESS STEEL.

DIP FLEXIBLE COUPLING TIE DOWN

SCALE: NONE — M490 TYP

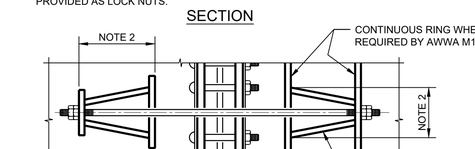

SECTION

PLAN

NOTES:

1. ALL EXPOSED FLEXIBLE COUPLINGS SHALL HAVE TIE RODS UNLESS SPECIFICALLY INDICATED OTHERWISE ON THE DRAWINGS.
2. DESIGN SHALL BE BASED ON TEST PRESSURE.
3. ANCHOR LUGS AND TIE RODS FOR STEEL PIPE SHALL BE DESIGNED BY PIPE MANUFACTURER IN ACCORDANCE WITH AWWA M11 STEEL PIPE MANUAL.
4. GRIND ALL CORNERS SMOOTH.
5. COAT ALL PIPE SURFACES WITH EPOXY PAINT AFTER MANUFACTURE PER SPECIFICATIONS.
6. FLEXIBLE COUPLINGS SHALL BE COATED PER SPECIFICATIONS.
7. ALL BURIED MATERIALS SHALL BE STAINLESS STEEL.

STEEL PIPE FLEXIBLE COUPLING TIE DOWN

SCALE: NONE — M491 TYP

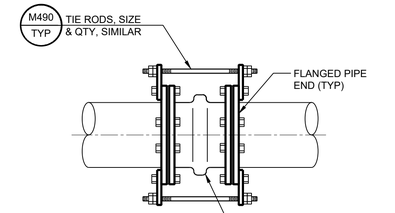

RESTRAINED FLEXIBLE RUBBER COUPLING

SCALE: NONE — M493 TYP

Revision	By	Appd.	YY.MM.DD
PERMIT SET	KM	GIA	2022.10.10
Issued	KM	GIA	2022.10.10

Permit/Seal

REGISTERED PROFESSIONAL ENGINEER — GABRIEL I. ARONOW — No.55607 — Exp.12/31/22 — CIVIL — STATE OF CALIFORNIA

09/01/2022

Consultant

Stantec

Stantec Consulting Services Inc.
3875 Atherton Road
Rocklin CA 95765-3716
Tel:(916) 773-8100
www.stantec.com

Copyright Reserved
The Contractor shall verify and be responsible for all dimensions. DO NOT scale the drawing - any errors or omissions shall be reported to Stantec without delay.
The Copyrights to all designs and drawings are the property of Stantec. Reproduction or use for any purpose other than that authorized by Stantec is forbidden.

Client/Project Logo

Client/Project

City of San Juan Bautista

SANITARY SEWER FORCE MAIN TO HOLLISTER PROJECT

San Juan Bautista, California

File Name: 31441-M001 TO M007	ASB Dwn.	KM Dsgn.	GIA Chkd.	2022.10.10 YYYY.MM.DD

Title

TYPICAL MECHANICAL DETAILS

Project No.	Scale
184031441	AS SHOWN
Revision 0	Sheet 87 of 128
	Drawing No. M006

ORIGINAL SHEET - ANSI D

v:\1-MKD-active\184031441\drawing\dcn\31441-m001 to m007 2022.10.10 2:53:33 PM

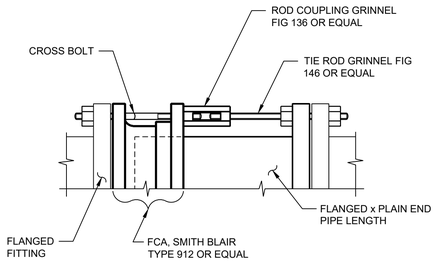

PIPE SIZE	3"	4"	6"	8"	10"	12"
TIE ROD SIZE	5/8"	5/8"	3/4"	3/4"	7/8"	7/8"
NO. OF TIE RODS	2	2	2	4	4	4

FCA WITH TIE-RODS

SCALE: NONE — M495 TYP

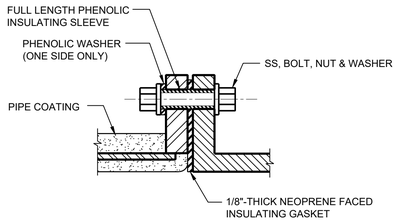

NOTES:

1. PLACE NON-INSULATED SIDE OF BOLT ON VALVE SIDE.
2. DO NOT APPLY METALLIC OR OTHER NON-METALLIC PAINTS TO INSULATING PARTS OR FLANGES.
3. INSULATING SLEEVE TO BE 1/64" SHORTER THAN DISTANCE BETWEEN STEEL WASHERS WHEN BOLT IS FULLY TIGHTENED.
4. INSULATING KIT TO BE PSI COMPANY TYPE "E" OR EQUAL.
5. COAT WITH COLD APPLIED COAL TAR MASTIC AFTER ASSEMBLING JOINT AND WRAP WITH BUTYL RUBBER ADHESIVE, POLYETHYLENE BACKED TAPE.

INSULATING FLANGE

SCALE: NONE — M496 TYP

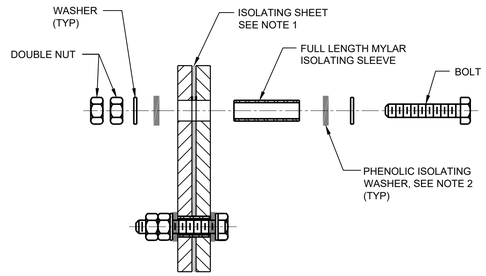

NOTES:

1. SEE PLANS FOR FASTENER AND ISOLATING SHEET MATERIALS AND SIZES.
2. PHENOLIC ISOLATING WASHER OUTSIDE DIAMETER SHALL BE WASHER O.D. +1/8"

DIELECTRIC ISOLATION FASTENER DETAIL

SCALE: NONE — M497 TYP

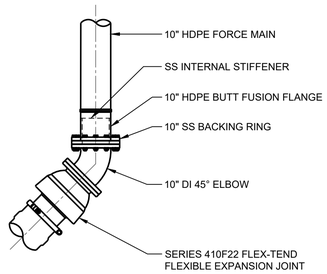

HDPE TO DI RESTRAINED CONNECTION DETAIL

SCALE: NONE — M498 TYP

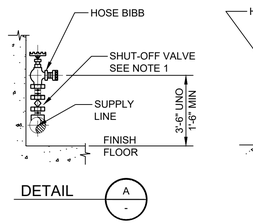

DETAIL A -

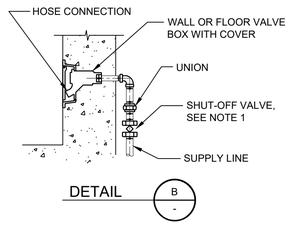

DETAIL B -

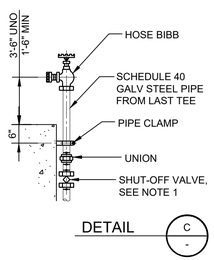

DETAIL C -

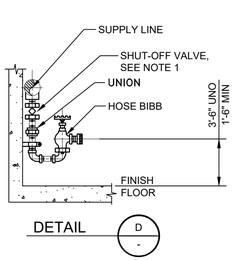

DETAIL D -

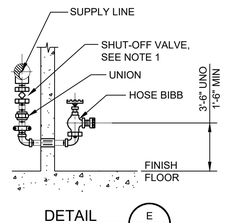

DETAIL E -

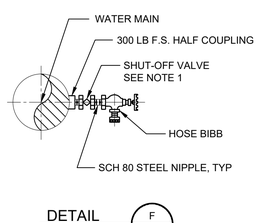

DETAIL F -

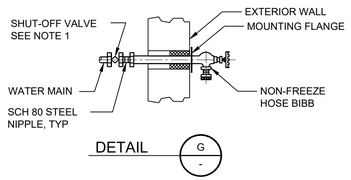

DETAIL G -

NOTES:

1. ALL HOSE BIBBS TO BE CONTROLLED BY INDIVIDUAL SHUT-OFF VALVES (BALL OR PLUG VALVES).
2. ALL SINGLE HEAD HOSE BIBBS SHALL BE 1 1/2" PIPE AND VALVES W/ 1" HOSE ADAPTER UNLESS OTHERWISE SHOWN.
3. PROVIDE WARNING SIGN AT EACH HOSE BIBB, SEE TYPICAL DETAIL C251.
4. PROVIDE HOSE RACK @ EACH HOSE BIBB SEE TYPICAL DETAIL M630.
5. SEE TYPICAL DETAIL C520 FOR FREE STANDING OUTDOOR HOSE BIBBS IN YARD AREAS.

HOSE BIBBS

SCALE: NONE — M625 TYP

ELEVATION — SECTION A -

NOTES:

1. HOSE RACK SHALL BE FABRICATED FROM 1/4" ALUMINUM PLATE. ROUND SMOOTH ALL EDGES AND SHARP CORNERS.
2. HOSE RACKS INSTALLED IN YARD LOCATIONS SHALL BE MOUNTED ON POST. WITH BOTTOM 3'-0" ABOVE FINISH GRADE. POST SIMILAR TO TYPICAL MECHANICAL DETAIL M631.
3. HOSE RACKS INSTALLED IN STRUCTURES SHALL BE WALL MOUNTED. FASTEN RACK TO WALL WITH (4) 3/8"Ø SST CONCRETE ANCHORS. FOR MASONRY WALLS, FASTEN TO GROUTED CELLS.
4. EACH HOSE RACK SHALL BE SUPPLIED WITH A 50-FOOT LONG INDUSTRIAL HOSE, IN ACCORDANCE WITH THE SPECIFICATIONS.

HOSE RACK

SCALE: NONE — M630 TYP

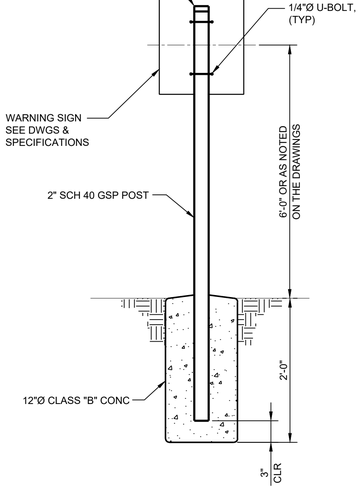

WARNING SIGN

SCALE: NONE — M631 TYP

Revision	By	Appd.	YY.MM.DD
BID SET	KM	GIA	2022.09.01
Issued	By	Appd	YYYY.MM.DD

Permit/Seal

REGISTERED PROFESSIONAL ENGINEER
GABRIEL I. ARONOW
No. 55607
Exp.12/31/22
CIVIL
STATE OF CALIFORNIA

09/01/2022

Consultant

Stantec
Stantec Consulting Services Inc.
3875 Atherton Road
Rocklin CA 95765-3716
Tel: (916) 773-8100
www.stantec.com

Copyright Reserved
The Contractor shall verify and be responsible for all dimensions. DO NOT scale the drawing - any errors or omissions shall be reported to Stantec without delay.
The Copyrights to all designs and drawings are the property of Stantec. Reproduction or use for any purpose other than that authorized by Stantec is forbidden.

Client/Project Logo

Client/Project
City of San Juan Bautista

SANITARY SEWER FORCE MAIN
TO HOLLISTER PROJECT

San Juan Bautista, California

File Name: 31441-M001 TO M007	ASB	KM	GIA	2022.09.01
	Dwn.	Dsgn.	Chkd.	YYYY.MM.DD

Title
TYPICAL MECHANICAL DETAILS

Project No.	Scale
184031441	AS SHOWN
Revision	Sheet
0	88 of 128

Drawing No.
M007

ORIGINAL SHEET - ANSI D
n:\1845\active\184031441\drawing\dwt\31441-m001 to m007 2022.10.04 6:01:32 PM

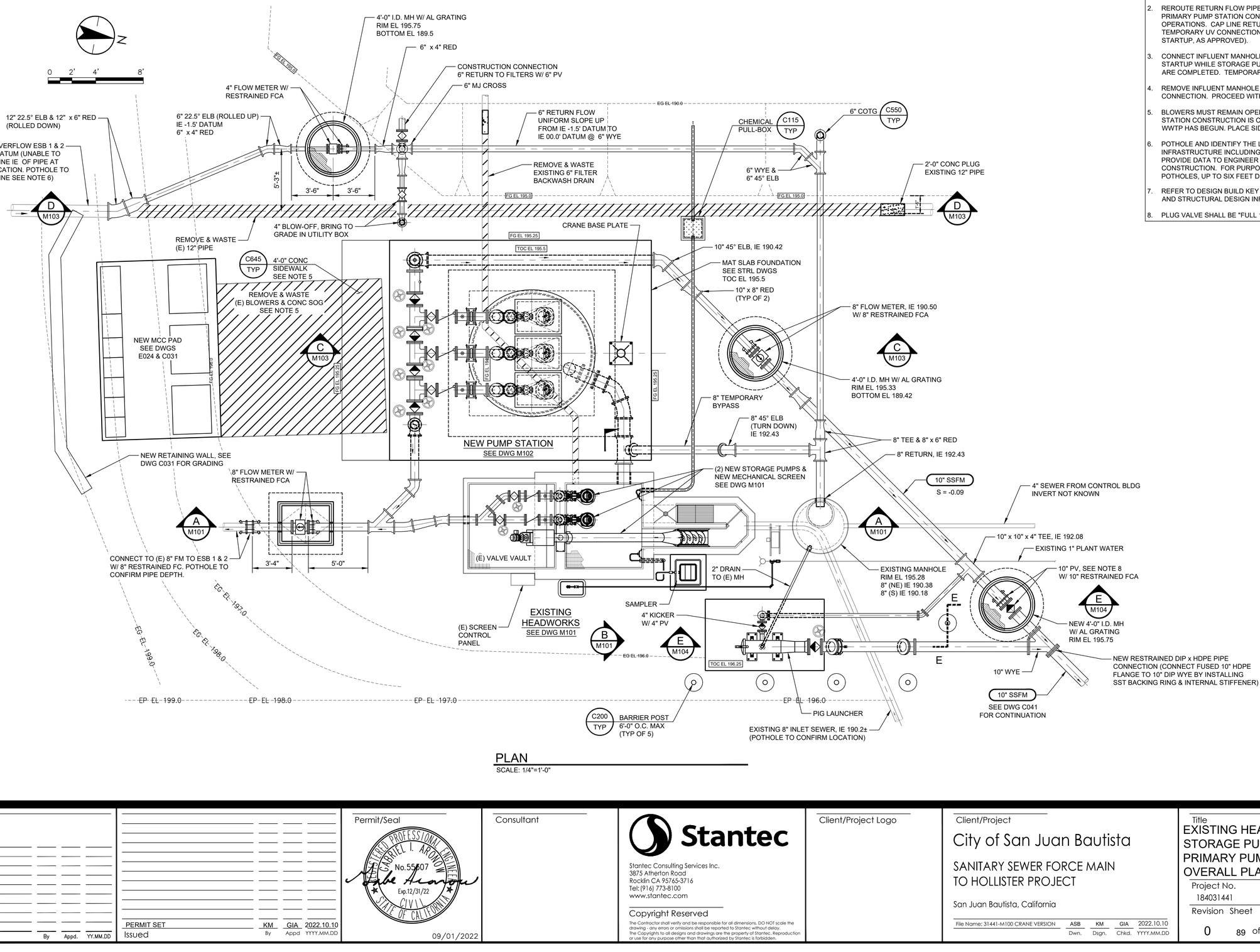

PLAN

SCALE: 1/4"=1'-0"

NOTES:

1. PREPARE PIPING AND PHASING PLAN FOR APPROVAL.
2. REROUTE RETURN FLOW PIPE TO UV TO CREATE SPACE FOR NEW PRIMARY PUMP STATION CONSTRUCTION WITH EXISTING WWTP IN OPERATIONS. CAP LINE RETURNING TO INFLUENT MANHOLE FROM TEMPORARY UV CONNECTION (FOR COMPLETION AFTER PRIMARY PUMP STARTUP, AS APPROVED).
3. CONNECT INFLUENT MANHOLE TO NEW PRIMARY PUMP WET WELL FOR STARTUP WHILE STORAGE PUMP IMPROVEMENTS IN EXISTING WET WELL ARE COMPLETED. TEMPORARILY PLUG PIPES TO EXISTING WET WELL.
4. REMOVE INFLUENT MANHOLE TO PRIMARY PUMP WET WELL CONNECTION. PROCEED WITH OTHER SURFACE IMPROVEMENTS.
5. BLOWERS MUST REMAIN OPERATIONAL UNTIL NEW PRIMARY PUMP STATION CONSTRUCTION IS COMPLETE AND PUMPING TO THE HOLLISTER WWTP HAS BEGUN. PLACE SIDEWALK AFTER DEMOLITION OF BLOWERS.
6. POTHOLE AND IDENTIFY THE LOCATION AND EXTENTS OF ALL EXISTING INFRASTRUCTURE INCLUDING PIPING AND ELECTRICAL EQUIPMENT. PROVIDE DATA TO ENGINEER 3 DAYS MINIMUM PRIOR TO CONSTRUCTION. FOR PURPOSES OF BIDDING, ASSUME TEN (10) POTHOLES, UP TO SIX FEET DEEP.
7. REFER TO DESIGN BUILD KEY NOTE 1 ON SHEET S100 FOR DESIGN BUILD AND STRUCTURAL DESIGN INFORMATION.
8. PLUG VALVE SHALL BE "FULL 100% PORT (PIGGABLE)".

Revision	By	Appd.	YY.MM.DD
PERMIT SET	KM	GIA	2022.10.10
Issued	By	Appd	YYYY.MM.DD

Permit/Seal

REGISTERED PROFESSIONAL ENGINEER GABRIEL T. ARONOW No. 55607 Exp.12/31/22 CIVIL STATE OF CALIFORNIA

09/01/2022

Consultant

Stantec

Stantec Consulting Services Inc.
3875 Atherton Road
Rocklin CA 95765-3716
Tel:(916) 773-8100
www.stantec.com

Copyright Reserved

The Contractor shall verify and be responsible for all dimensions. DO NOT scale the drawing - any errors or omissions shall be reported to Stantec without delay. The Copyrights to all designs and drawings are the property of Stantec. Reproduction or use for any purpose other than that authorized by Stantec is forbidden.

Client/Project Logo

Client/Project

City of San Juan Bautista

SANITARY SEWER FORCE MAIN
TO HOLLISTER PROJECT

San Juan Bautista, California

File Name: 31441-M100 CRANE VERSION | ASB Dwn. | KM Dsgn. | GIA Chkd. | 2022.10.10 YYYY.MM.DD

Title

EXISTING HEADWORKS MODIFICATION, STORAGE PUMP STATION AND PRIMARY PUMP STATION OVERALL PLAN

Project No. 184031441

Scale 1/4" = 1'-0"

Revision 0

Sheet 89 of 128

Drawing No. M100

v:\1842\active\184031441\drawing\sct\31441-m100 crane version 2022.10.28 6:53:43 AM
ORIGINAL SHEET - ANSI D

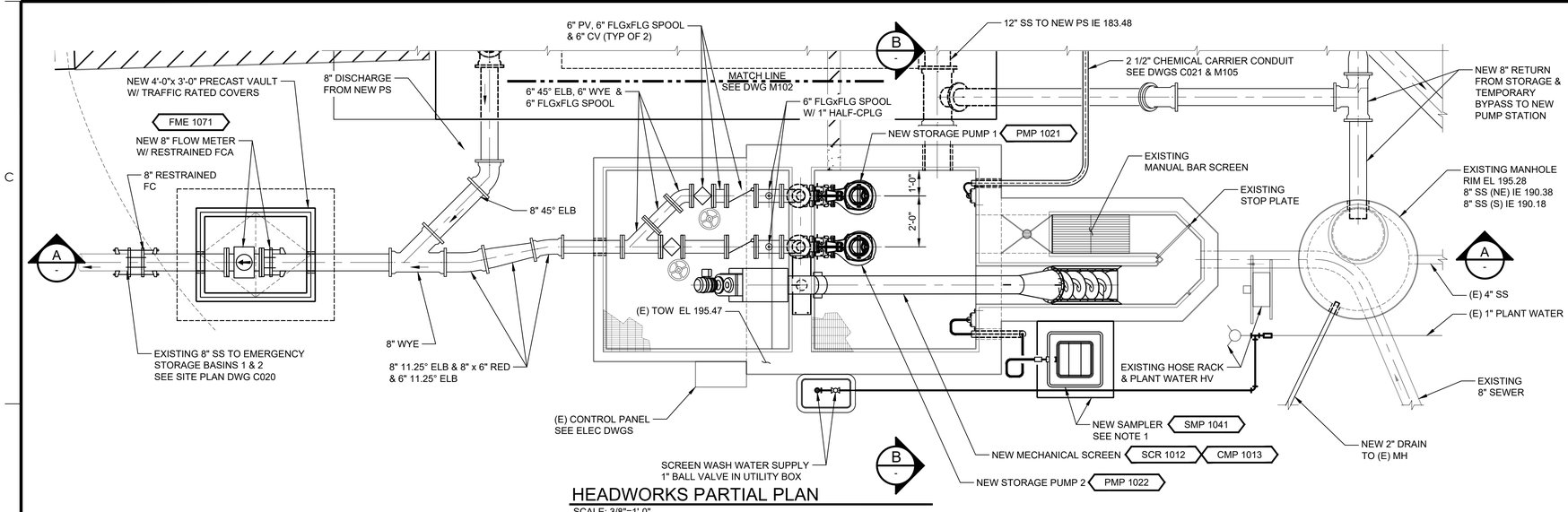

HEADWORKS PARTIAL PLAN

SCALE: 3/8"=1'-0"

NOTES:

1. SAMPLER IS TO BE MOUNTED ON A 36" SQUARE CONC EQUIPMENT BASE, TOP OF SLAB EL 197.15 SIMILAR TO TYPICAL STRUCTURAL DETAIL S238.
2. REFER TO DESIGN BUILD KEY NOTE 1 ON SHEET S100 FOR DESIGN BUILD AND STRUCTURAL DESIGN INFORMATION.

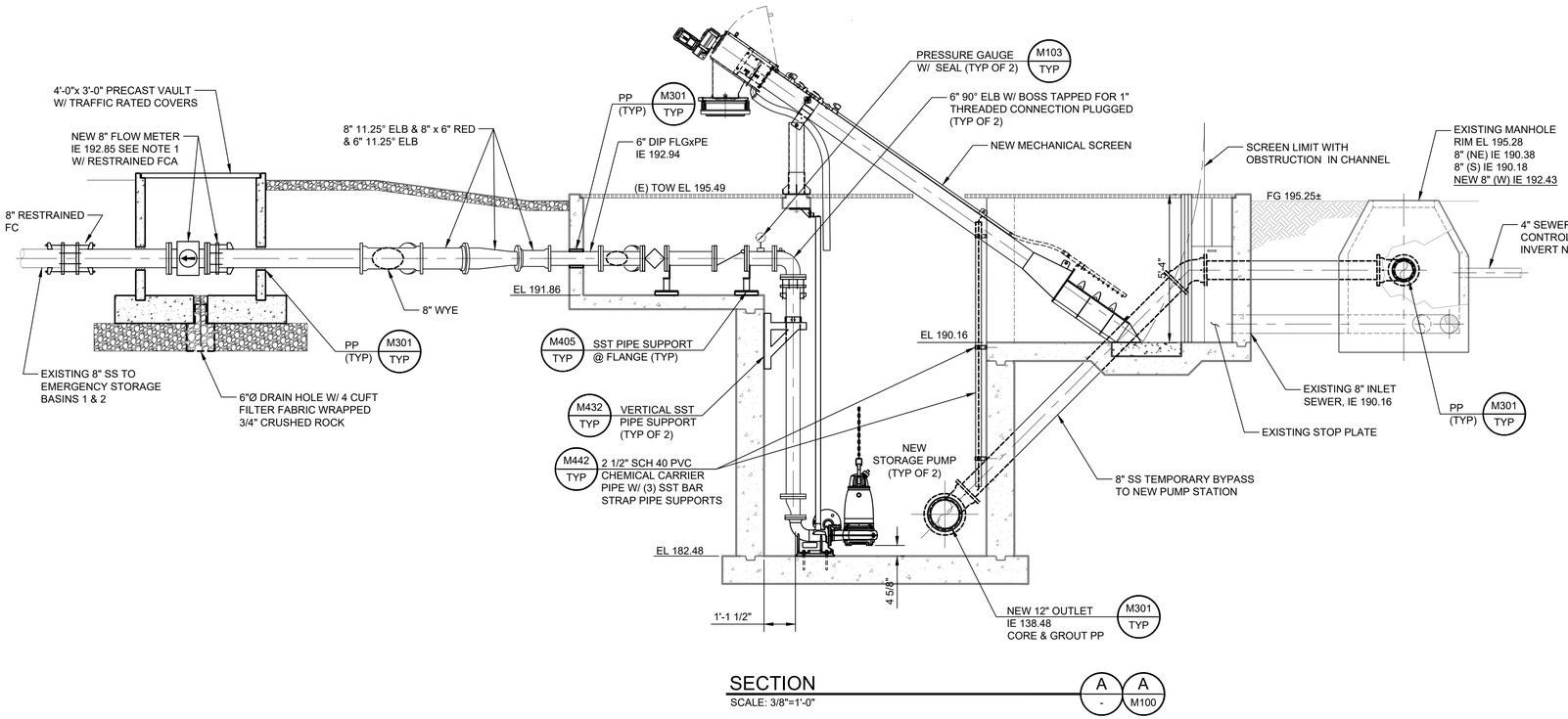

SECTION

SCALE: 3/8"=1'-0"

A - A M100

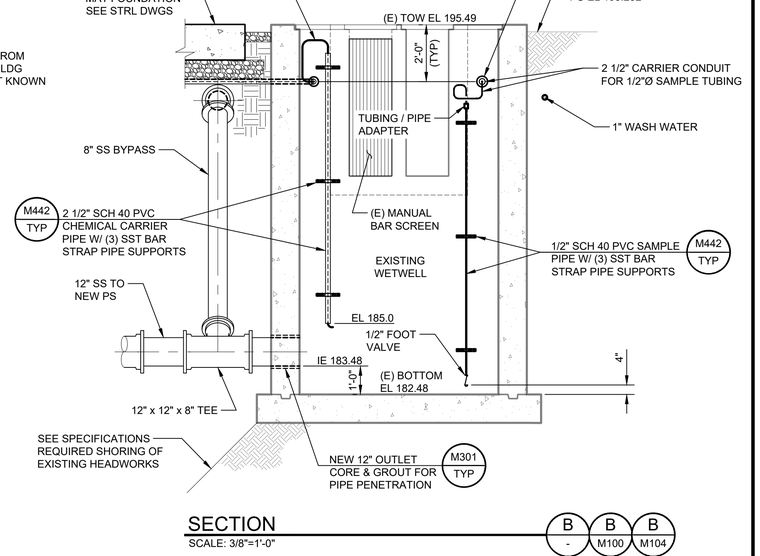

SECTION

SCALE: 3/8"=1'-0"

B - B M100 B M104

Revision	By	Appd.	YY.MM.DD
PERMIT SET	KM	GIA	2022.10.10
Issued	By	Appd	YYYY.MM.DD

Permit/Seal

REGISTERED PROFESSIONAL ENGINEER GABRIEL I. ARONOV No.55807 Exp.12/31/22 CIVIL STATE OF CALIFORNIA

09/01/2022

Consultant

Stantec

Stantec Consulting Services Inc.
3875 Atherton Road
Rocklin CA 95765-3716
Tel: (916) 773-8100
www.stantec.com

Copyright Reserved

The Contractor shall verify and be responsible for all dimensions. DO NOT scale the drawing - any errors or omissions shall be reported to Stantec without delay. The Copyrights to all designs and drawings are the property of Stantec. Reproduction or use for any purpose other than that authorized by Stantec is forbidden.

Client/Project Logo

Client/Project

City of San Juan Bautista

SANITARY SEWER FORCE MAIN TO HOLLISTER PROJECT

San Juan Bautista, California

File Name: 31441-M100 CRANE VERSION | ASB Dwn. | KM Dsgn. | GIA Chkd. | 2022.10.10 YYYY.MM.DD

Title

EXISTING HEADWORKS MODIFICATION, STORAGE PUMP STATION AND PRIMARY PUMP STATION
PLAN & SECTIONS

Project No. 184031441

Scale AS SHOWN

Revision 0

Sheet 90 of 128

Drawing No. M101

\\<1MP\Jobs\184031441\Drawing\Sht\31441-m100 crane ver.dgn
2022.10.27 2:50:22 PM
ORIGINAL SHEET - ANSI D

NOTES:

1. REFER TO DESIGN BUILD KEY NOTE 1 ON SHEET S100 FOR DESIGN BUILD AND STRUCTURAL DESIGN INFORMATION.
2. ALL DISCHARGE PIPING AT THE PRIMARY PUMP STATION SHALL BE EITHER DUCTILE IRON PIPE OR STAINLESS STEEL, SEE SPECIFICATIONS.

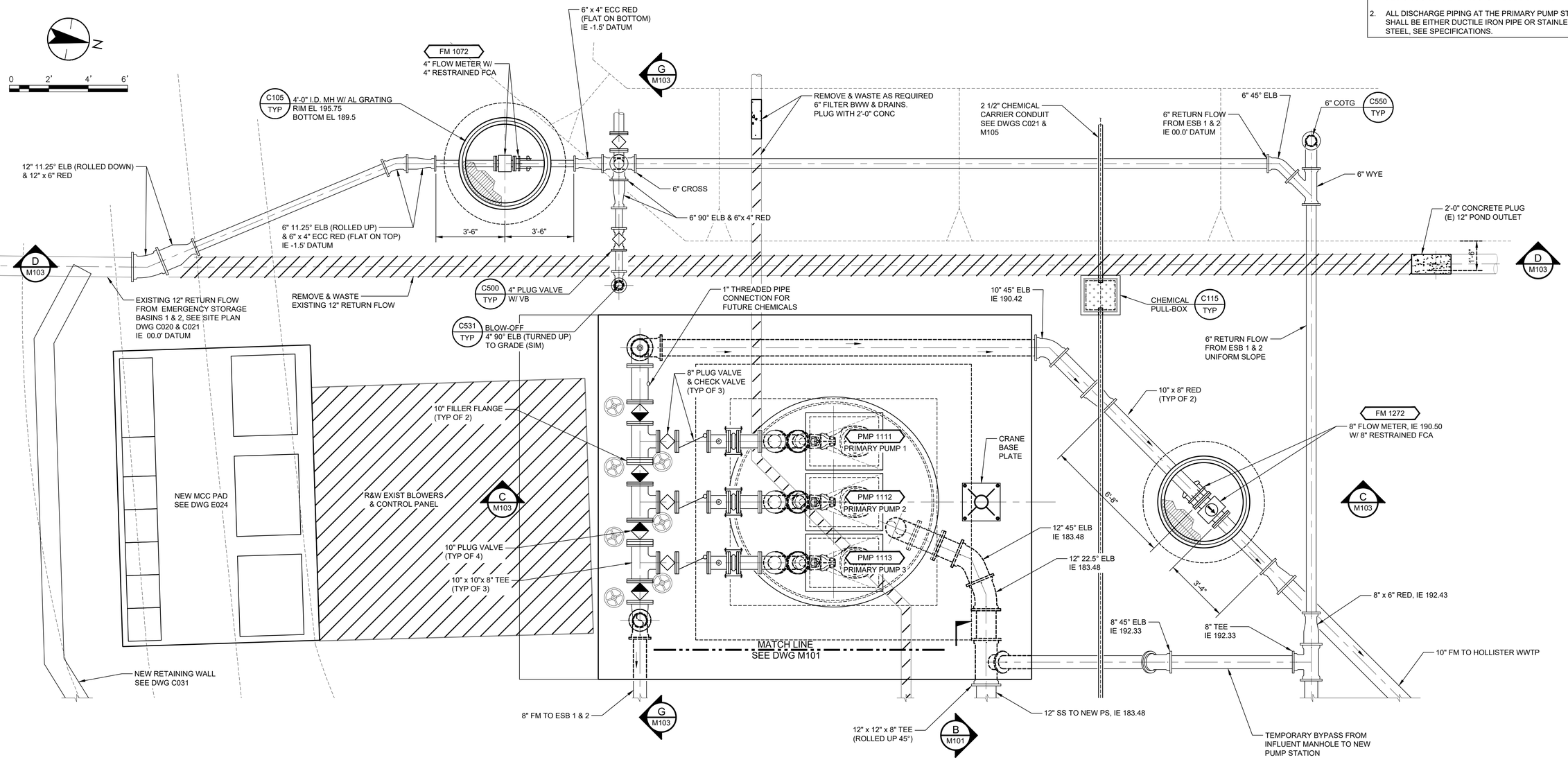

NEW PUMP STATION PARTIAL PLAN

SCALE: 3/8" = 1'-0"

Revision	By	Appd.	YY.MM.DD

PERMIT SET	KM	GIA	2022.10.10
Issued	By	Appd	YYYY.MM.DD

Permit/Seal

REGISTERED PROFESSIONAL ENGINEER GABRIEL I. ARONOW No.55607 Exp.12/31/22 CIVIL STATE OF CALIFORNIA

09/01/2022

Consultant

Stantec

Stantec Consulting Services Inc.
3875 Atherton Road
Rocklin CA 95765-3716
Tel: (916) 773-8100
www.stantec.com

Copyright Reserved

The Contractor shall verify and be responsible for all dimensions. DO NOT scale the drawing - any errors or omissions shall be reported to Stantec without delay. The Copyrights to all designs and drawings are the property of Stantec. Reproduction or use for any purpose other than that authorized by Stantec is forbidden.

Client/Project Logo

Client/Project

City of San Juan Bautista

SANITARY SEWER FORCE MAIN TO HOLLISTER PROJECT

San Juan Bautista, California

File Name: 31441-M100 CRANE VERSION	ASB	KM	GIA	2022.10.10
	Dwn.	Dsgn.	Chkd.	YYYY.MM.DD

Title

EXISTING HEADWORKS MODIFICATION, STORAGE PUMP STATION AND PRIMARY PUMP STATION PARTIAL PLAN

Project No.	Scale
184031441	AS SHOWN

Revision	Sheet	Drawing No.
0	91 of 128	M102

v:\1840\active\184031441\drawing\act\31441-m100 crane version 2022.11.16 5:55 AM
ORIGINAL SHEET - ANSI D

NOTES:

1. REFER TO DESIGN BUILD KEY NOTE 1 ON SHEET S100 FOR DESIGN BUILD AND STRUCTURAL DESIGN INFORMATION.
2. ALL DISCHARGE PIPING AT THE PRIMARY PUMP STATION SHALL BE EITHER DUCTILE IRON PIPE OR STAINLESS STEEL, SEE SPECIFICATIONS.

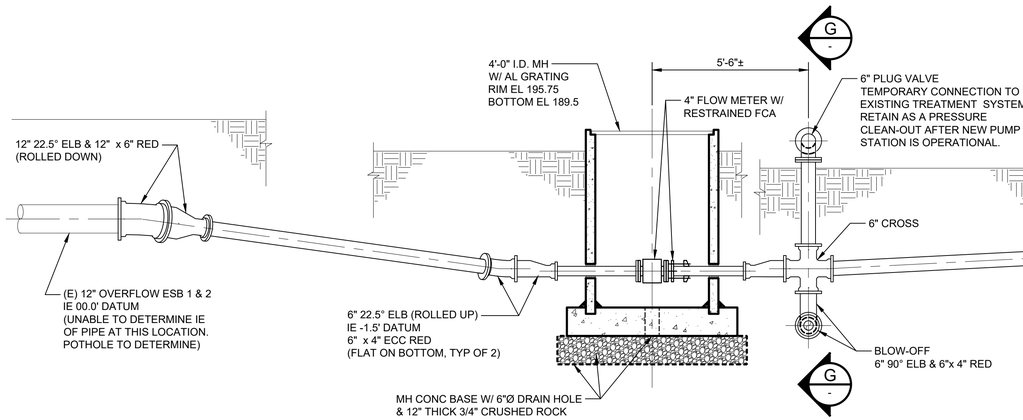

SECTION
SCALE: 3/8"=1'-0"
D M100 D M102

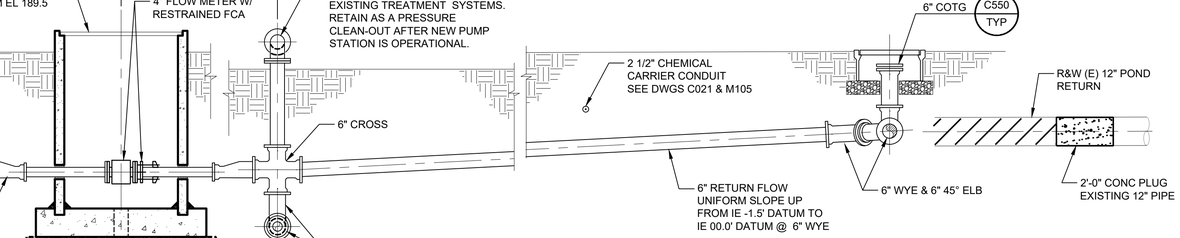

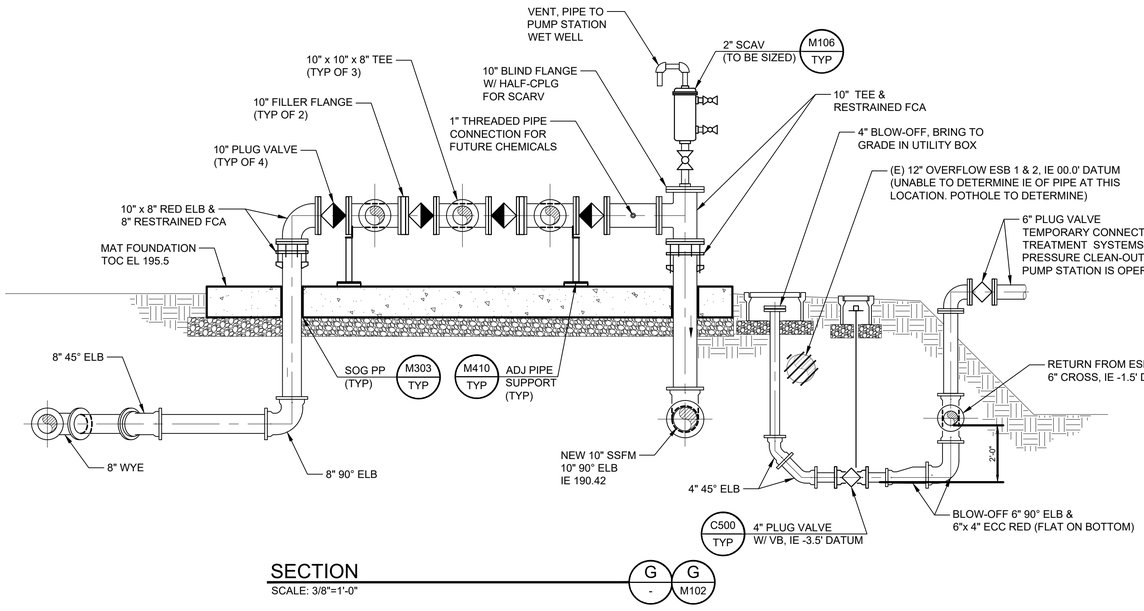

SECTION
SCALE: 3/8"=1'-0"
G - G M102

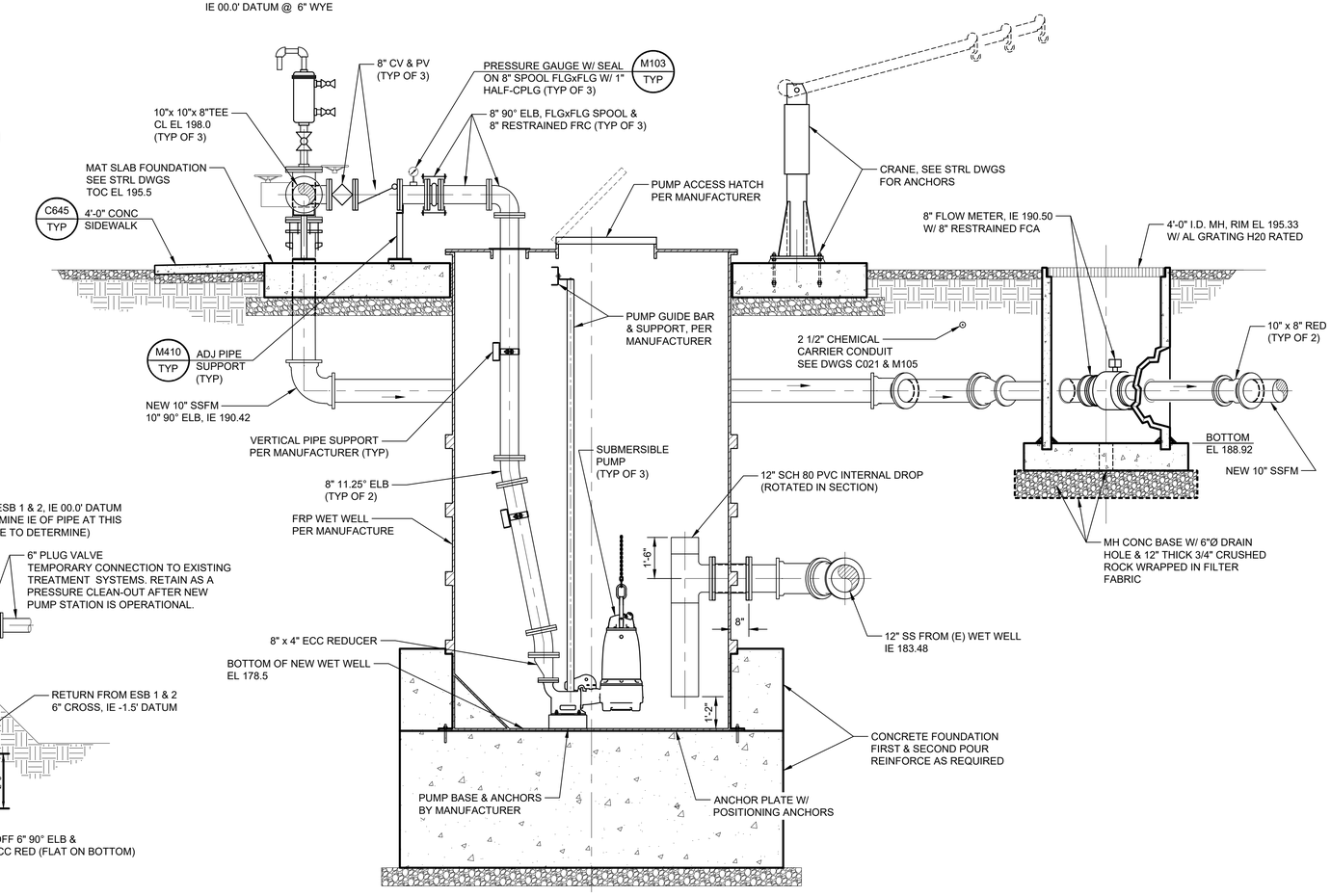

SECTION
SCALE: 3/8"=1'-0"
C M100 C M102

Revision	By	Appd.	YY.MM.DD

PERMIT SET	KM	GIA	2022.10.10
Issued	By	Appd	YYYY.MM.DD

Permit/Seal

REGISTERED PROFESSIONAL ENGINEER
GABRIEL I. ARONOW
No. 55607
Exp.12/31/22
CIVIL
STATE OF CALIFORNIA

09/01/2022

Consultant

Stantec
Stantec Consulting Services Inc.
3875 Atherton Road
Rocklin CA 95765-3716
Tel:(916) 773-8100
www.stantec.com

Copyright Reserved
The Contractor shall verify and be responsible for all dimensions. DO NOT scale the drawing - any errors or omissions shall be reported to Stantec without delay. The Copyrights to all designs and drawings are the property of Stantec. Reproduction or use for any purpose other than that authorized by Stantec is forbidden.

Client/Project Logo

Client/Project
City of San Juan Bautista

SANITARY SEWER FORCE MAIN
TO HOLLISTER PROJECT

San Juan Bautista, California

File Name: 31441-M100 CRANE VERSION	ASB	KM	GIA	2022.10.10
	Dwn.	Dsgn.	Chkd.	YYYY.MM.DD

Title
EXISTING HEADWORKS MODIFICATION, STORAGE PUMP STATION AND PRIMARY PUMP STATION
SECTIONS

Project No.	Scale
184031441	AS SHOWN
Revision	Sheet
0	92 of 128

Drawing No.
M103

ORIGINAL SHEET - ANSI D

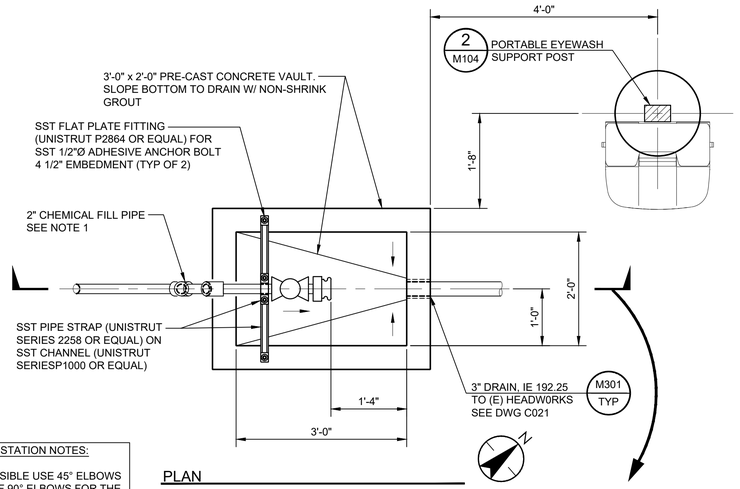

PLAN

CHEMICAL FILL STATION NOTES:

1. WHEN POSSIBLE USE 45° ELBOWS INSTEAD OF 90° ELBOWS FOR THE 2" CHEMICAL FILL PIPE.
2. SEE ELECTRICAL DRAWINGS FOR FILL STATION REMOTE ALARM EQUIPMENT.

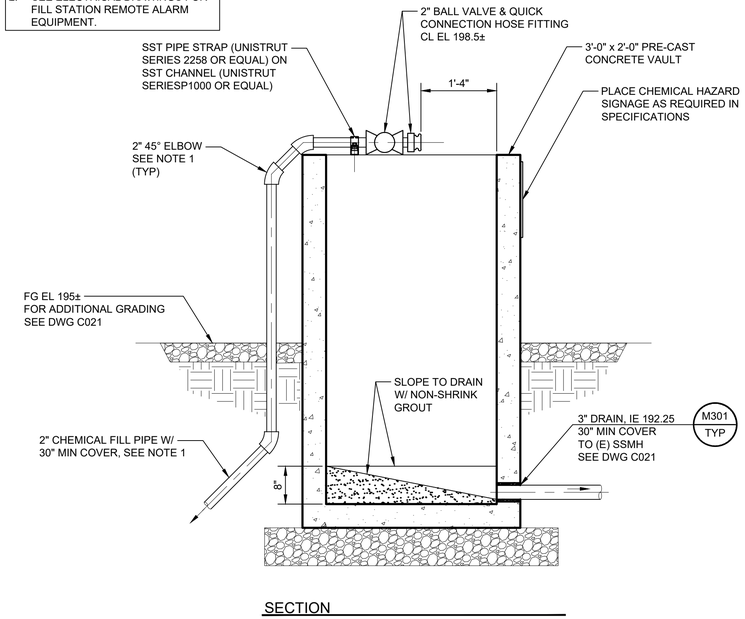

SECTION

CHEMICAL FILLING STATION DETAIL — 1 / C021
SCALE: 3/4" = 1'-0"

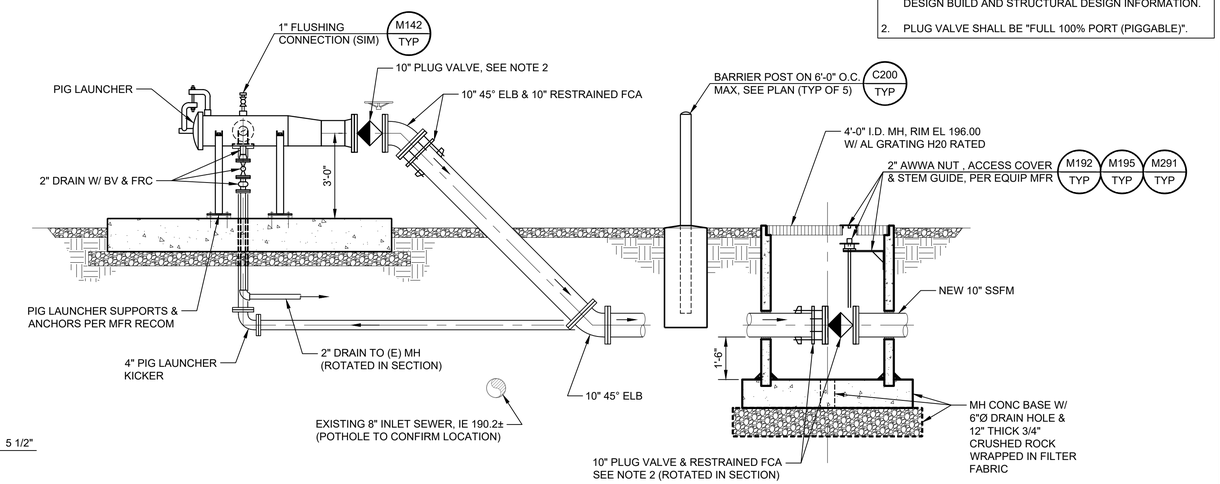

SECTION — E / M100
SCALE: 3/8"=1'-0"

NOTES:

1. REFER TO DESIGN BUILD KEY NOTE 1 ON SHEET S100 FOR DESIGN BUILD AND STRUCTURAL DESIGN INFORMATION.
2. PLUG VALVE SHALL BE "FULL 100% PORT (PIGGABLE)".

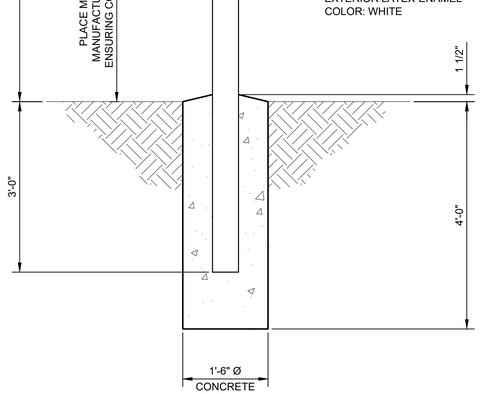

PORTABLE EYEWASH
SUPPORT POST DETAIL — 2 / - | 2 / M105 | 2 / C021
SCALE: 3/4" = 1'-0"

Revision	By	Appd.	YY.MM.DD
PERMIT SET	KM	GIA	2022.10.10
Issued	By	Appd	YYYY.MM.DD

Permit/Seal

REGISTERED PROFESSIONAL ENGINEER
GABRIEL I. ARONOV
No. 55807
Exp.12/31/22
CIVIL
STATE OF CALIFORNIA

09/01/2022

Consultant

Stantec

Stantec Consulting Services Inc.
3875 Atherton Road
Rocklin CA 95765-3716
Tel: (916) 773-8100
www.stantec.com

Copyright Reserved
The Contractor shall verify and be responsible for all dimensions. DO NOT scale the drawing - any errors or omissions shall be reported to Stantec without delay.
The Copyrights to all designs and drawings are the property of Stantec. Reproduction or use for any purpose other than that authorized by Stantec is forbidden.

Client/Project Logo

Client/Project

City of San Juan Bautista

SANITARY SEWER FORCE MAIN
TO HOLLISTER PROJECT

San Juan Bautista, California

File Name: 31441-M100 CRANE VERSION	ASB	KM	GIA	2022.10.10
	Dwn.	Dsgn.	Chkd.	YYYY.MM.DD

Title

EXISTING HEADWORKS MODIFICATION, STORAGE PUMP STATION AND PRIMARY PUMP STATION
PLAN, SECTION & DETAILS

Project No.	Scale
184031441	AS SHOWN

Revision	Sheet	Drawing No.
0	93 of 128	M104

ORIGINAL SHEET - ANSI D
\\<UNID\acdfiles\184031441\cpnwrkg\cad\31441-m100 crane version
2022.10.28 8:54:17 AM

NOTES:

1. CORE HOLE IN EXISTING CONCRETE FOUNDATION FOR CHEMICAL FILL PIPE AND CHEMICAL CARRIER CONDUITS. EXCAVATE FROM EDGE OF SLAB TO CORED HOLES TO INSTALL PIPE AND CONDUITS. BACKFILL UNDER EXISTING CONCRETE FOUNDATION SHALL BE CLSM.
2. NEW SPILL CONTAINMENT CURB EPOXY BONDED REINFORCING BARS MUST BE 4" CLEAR FROM EDGE OF EXISTING CONCRETE SLAB.
3. PAINT THE TOP 4 INCHES INSIDE AND OUTSIDE OF THE NEW SPILL CONTAINMENT CURB "SAFETY YELLOW" .

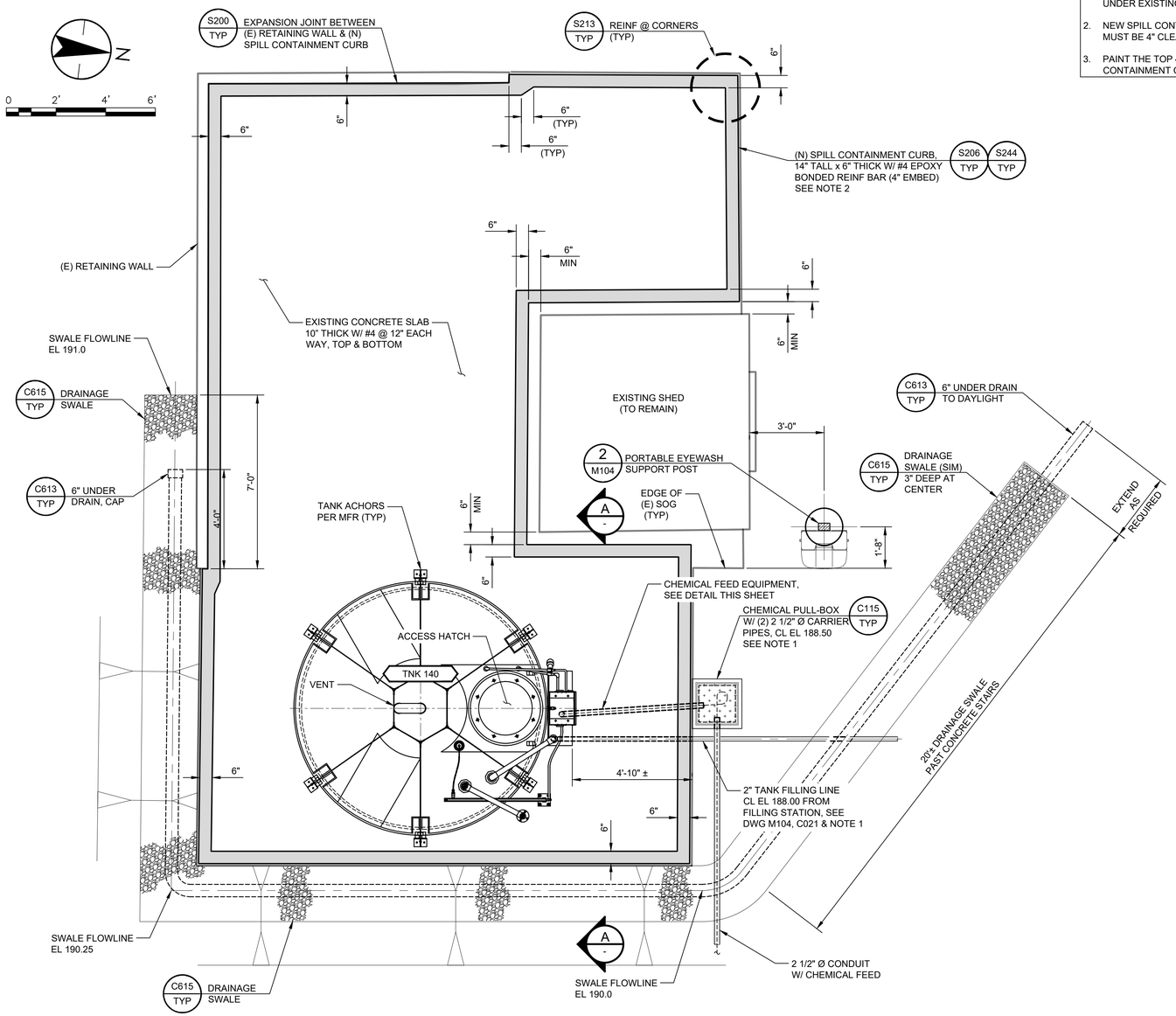

PLAN

SCALE: 3/8" = 1'-0"

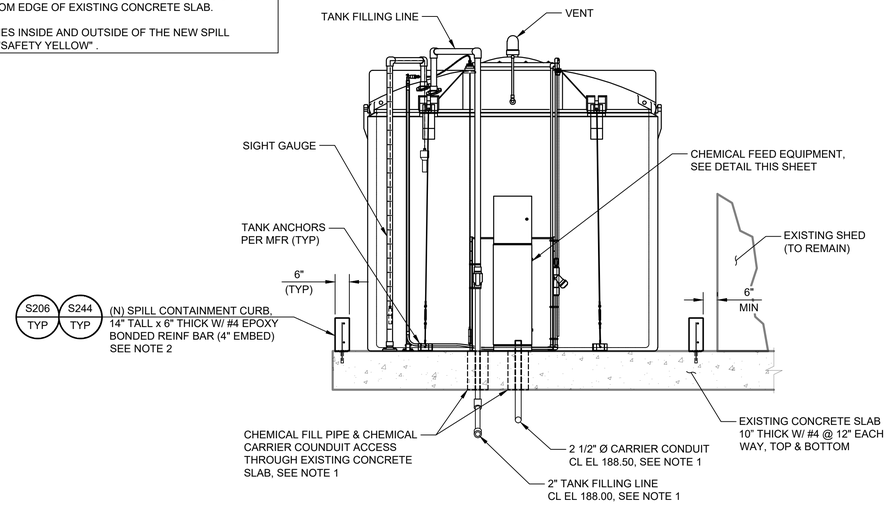

SECTION

SCALE: 3/8" = 1'-0"

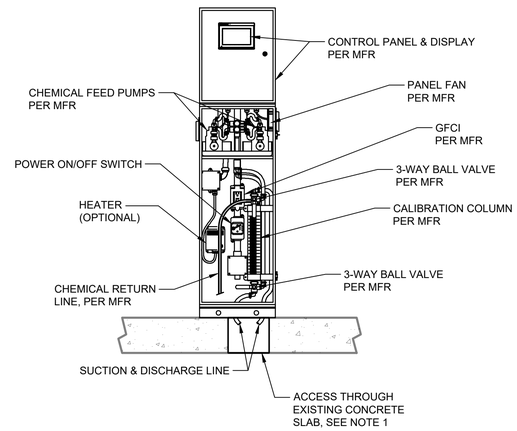

CHEMICAL FEED EQUIPMENT DETAIL

SCALE: NOT TO SCALE

Revision	By	Appd.	YY.MM.DD
BID SET	KM	GIA	2022.12.30
PERMIT SET	KM	GIA	2022.10.10
Issued	By	Appd	YYYY.MM.DD

Permit/Seal

REGISTERED PROFESSIONAL ENGINEER — GABRIEL I. ARONOW — No. 55607 — Exp.12/31/24 — CIVIL — STATE OF CALIFORNIA

12/30/2022

Consultant

Stantec
Stantec Consulting Services Inc.
3875 Atherton Road
Rocklin CA 95765-3716
Tel: (916) 773-8100
www.stantec.com

Copyright Reserved
The Contractor shall verify and be responsible for all dimensions. DO NOT scale the drawing - any errors or omissions shall be reported to Stantec without delay. The Copyrights to all designs and drawings are the property of Stantec. Reproduction or use for any purpose other than that authorized by Stantec is forbidden.

Client/Project Logo

Client/Project

City of San Juan Bautista

SANITARY SEWER FORCE MAIN TO HOLLISTER PROJECT

San Juan Bautista, California

File Name: 31441-M105 | ASB Dwn. | KM Dsgn. | GIA Chkd. | 2022.12.30 YYYY.MM.DD

Title

NEW CHEMICAL FEED SYSTEM PLAN, SECTION AND DETAIL

Project No. 184031441 | Scale AS SHOWN

Revision 0 | Sheet 94 of 128 | Drawing No. M105

ORIGINAL SHEET - ANSI D

\\<LMDC.ipsfw\>\184031441\Cad\dwg\civil\31441-m105 2022.04.17 12:09:40 jha

NOTES:

1. REFER TO DESIGN BUILD KEY NOTE 1 ON SHEET S100 FOR DESIGN BUILD AND STRUCTURAL DESIGN INFORMATION.

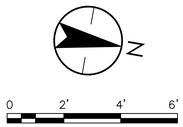

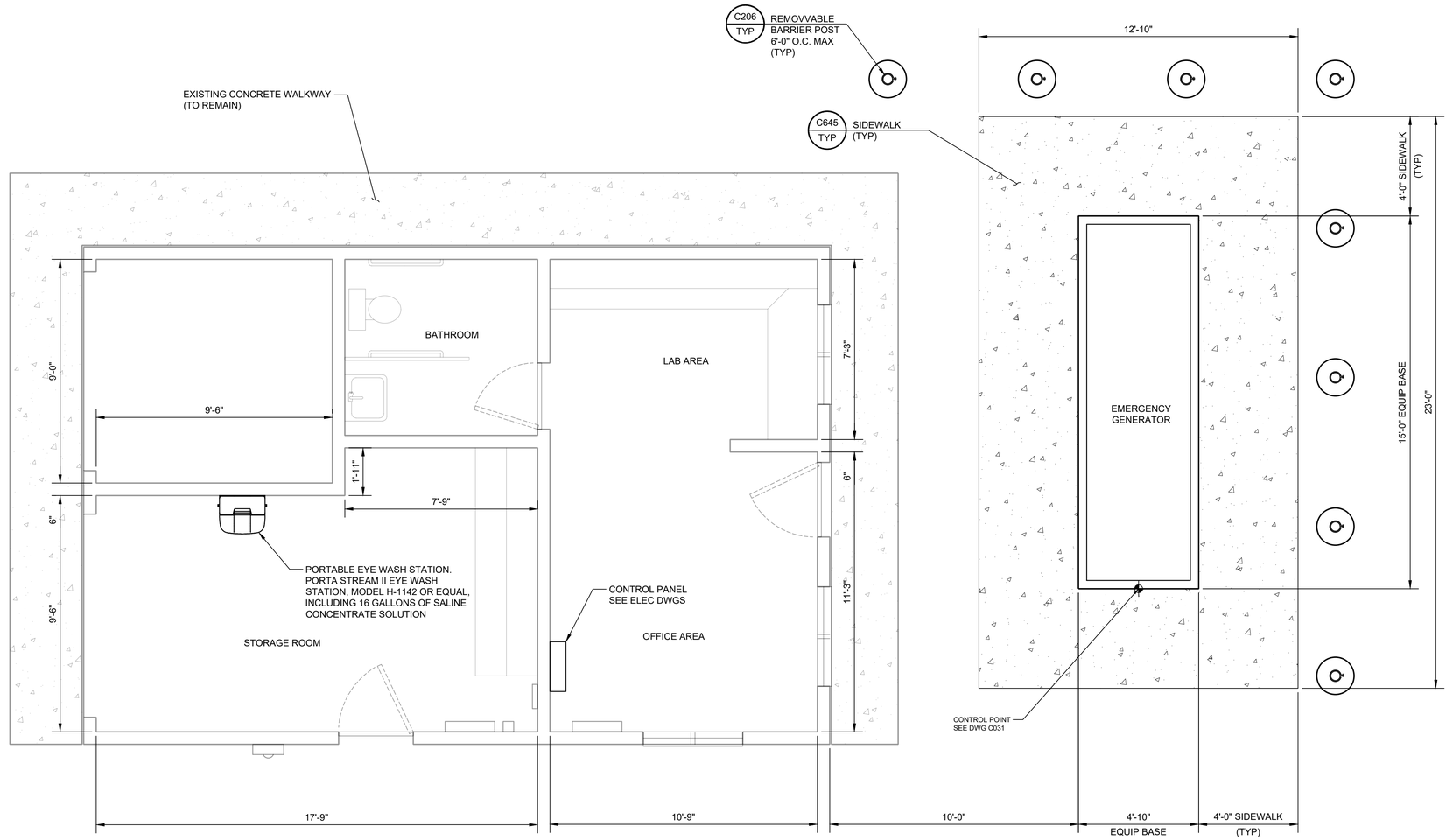

EXISTING CONTROL BUILDING & NEW EMERGENCY GENERATOR PLAN

SCALE: 3/8"=1'-0"

Revision	By	Appd.	YY.MM.DD
PERMIT SET	KM	GIA	2022.10.10
Issued	By	Appd	YYYY.MM.DD

Permit/Seal

REGISTERED PROFESSIONAL ENGINEER
GABRIEL I. ARONOW
No. 55607
Exp.12/31/22
CIVIL
STATE OF CALIFORNIA

09/01/2022

Consultant

Stantec

Stantec Consulting Services Inc.
3875 Atherton Road
Rocklin CA 95765-3716
Tel: (916) 773-8100
www.stantec.com

Copyright Reserved

The Contractor shall verify and be responsible for all dimensions. DO NOT scale the drawing - any errors or omissions shall be reported to Stantec without delay. The Copyrights to all designs and drawings are the property of Stantec. Reproduction or use for any purpose other than that authorized by Stantec is forbidden.

Client/Project Logo

Client/Project

City of San Juan Bautista

SANITARY SEWER FORCE MAIN TO HOLLISTER PROJECT

San Juan Bautista, California

File Name: 31441-M200 | MLM Dwn. | GIA Dsgn. | GIA Chkd. | 2022.10.10 YYYY.MM.DD

Title

EXISTING CONTROL BUILDING MODIFICATION PLAN

Project No. 184031441 | Scale 3/8" = 1'-0"

Revision 0 | Sheet 95 of 128 | Drawing No. M200

ORIGINAL SHEET - ANSI D

v:\1840\active\184031441\drawing\sct\31441-m200 2022.10.27 12:58:17 PM

SINGLE LINE DIAGRAM SYMBOLS

THERMAL MAGNETIC CIRCUIT BREAKER
30AT / 100AF — AMP TRIP; AMP FRAME

MCP CIRCUIT BREAKER
30AT / 100AF — TRIP SETTING BASED ON MOTOR HORSEPOWER; CONTINUOUS AMPS

LOW VOLTAGE DRAWOUT CIRCUIT BREAKER
20AT / 100AF (L-S-I-G)
L = LONG TIME
S = SHORT TIME
I = INSTANTANEOUS
G = GROUND FAULT

30A MCP
Y — NEMA X
COMBINATION NEMA RATED STARTER
X = NEMA SIZE
Y = TYPE (FVNR, FVR)

X VFD — VARIABLE FREQUENCY DRIVE
X = HP RATING

X RVSS — REDUCED VOLTAGE SOLID STATE STARTER
X = HP RATING

X Y — PACKAGED EQUIPMENT
X = EQUIPMENT SIZE
Y = TYPE (KW, KVA, OR HP AS INDICATED

K — KEY INTERLOCK

TRANSFER SWITCH (MANUAL OR AUTOMATIC)

AS — AMMETER SWITCH
CS — CONTROL SWITCH
SB — SHORTING BLOCK
VS — VOLTMETER SWITCH

METERING DEVICE
X = METER TYPE
100/5 — X
WHM — WATT HOUR METER
WM — WATT METER
AM — AMMETER
VM — VOLTMETER
PFM — POWER FACTOR METER

(3) — POTENTIAL TRANSFORMER
RATIO AND NUMBER OF PT'S AS INDICATED

(3) — CURRENT TRANSFORMER
RATIO AND NUMBER OF CT'S AS INDICATED

5A — FUSE
SIZE AS INDICATED

X — FLA / SFA — MOTOR
X = HORSEPOWER

DELTA-WYE TRANSFORMER WITH SECONDARY KVA SIZE AND VOLTAGE RATIO AS INDICATED

SINGLE LINE DIAGRAM SYMBOLS (CONT.)

FUSED CONTROL POWER TRANSFORMER
ELECTRICAL MOTOR OPERATED VALVE, WITH INTEGRAL REVERSING STARTER (MOV)
30A — DISCONNECT SWITCH SIZE AS INDICATED
30A — DISCONNECT SWITCH WITH EMERGENCY STOP SIZE AS INDICATED
X / Y — FUSED DISCONNECT SWITCH SIZE AS INDICATED
CAPACITOR
SPD — SURGE PROTECTIVE DEVICE
SSM — SOLID STATE METERING DEVICE
LIGHTNING ARRESTOR AND SURGE CAPACITOR
X — POWER FILTER/CONDITIONER

CONDUIT AND RACEWAY SYMBOLS

EXPOSED OR CONCEALED CONDUIT
CONDUIT RUN (UNDERGROUND OR IN CONCRETE)
CONDUIT RUN (CHANGE IN ELEVATION)
CONDUIT TURNING UP
CONDUIT TURNING DOWN
CONDUIT GROUPED TOGETHER AND SHOWN AS SINGLE LINE FOR CLARITY
CONDUIT FROM FLOOR ABOVE TO FLOOR BELOW
CONDUIT CAPPED, OR SEALED
HOMERUN TO EQUIPMENT INDICATED (3/4" CONDUIT 2#12, 1#12GND UNLESS INDICATED OTHERWISE)

MISCELLANEOUS SYMBOLS

J — JUNCTION BOX OR FITTING
POWER PANEL
M — MOTOR
T — THERMOSTAT
FIELD DEVICE
COMBINATION STARTER

GROUNDING SYMBOLS

GROUND ROD AND GROUND WELL
GROUND ROD (3/4" X 10'-0")
GROUND CONNECTION - BOLTED TYPE
GROUND CONNECTION - EXOTHERMIC TYPE
BARE COPPER GROUND TO GROUND WIRE IN SLAB, OR UNDERGROUND GROUND GRID
EARTH GROUNDING

SCHEMATIC DIAGRAM SYMBOLS

SINGLE POLE TOGGLE SWITCH
VACUUM OR PRESSURE SWITCH CLOSE ON RISING PRESSURE
VACUUM OR PRESSURE SWITCH OPEN ON RISING PRESSURE
FLOAT LEVEL SWITCH CLOSE ON RISING LEVEL
FLOAT LEVEL SWITCH OPEN ON RISING LEVEL
NORMALLY OPEN
NORMALLY CLOSED
NORMALLY OPEN HELD CLOSED
NORMALLY CLOSED HELD OPEN
MAINTAINED POSITION
TEMPERATURE SWITCH CLOSE ON RISING TEMPERATURE
TEMPERATURE SWITCH OPEN ON RISING TEMPERATURE
FLOW SWITCH CLOSE ON INCREASING FLOW
FLOW SWITCH OPEN ON INCREASING FLOW
TORQUE SWITCH OPEN ON INCREASING TORQUE
SOLENOID VALVE
E-STOP PUSHBUTTON
DI — DIGITAL INPUT TO PLC/RTU/DCS
DO — DIGITAL OUTPUT FROM PLC/RTU/DCS NORMALLY OPEN
DO — DIGITAL OUTPUT FROM PLC/RTU/DCS NORMALLY CLOSED
AI — ANALOG INPUT TO PLC/RTU/DCS 4-20 mA (UNLESS INDICATED OTHERWISE)
AO — ANALOG OUTPUT FROM PLC/RTU/DCS 4-20 mA (UNLESS INDICATED OTHERWISE)
L O R — THREE - POSITION SELECTOR SWITCH
L R — TWO - POSITION SELECTOR SWITCH
THREE - POSITION SPRING RETURN-TO-CENTER MOMENTARY CONTACT SWITCH

SCHEMATIC DIAGRAM SYMBOLS (CONT.)

X — CONTROL RELAY OR COIL
X = DEVICE
CR — CONTROL RELAY
TD — TIME DELAY RELAY (TIMING RANGE AS INDICATED)
M — MOTOR STARTER
PC — PHOTOCELL

NORMALLY OPEN CONTACT
NORMALLY CLOSED CONTACT
XXXX — NORMALLY OPEN CONTACT LINE REFERENCE
XXXX — NORMALLY CLOSED CONTACT LINE REFERENCE

TIMED CONTACTS
CONTACT ACTION IS DELAYED AFTER COIL IS:
ENERGIZED
TD1 — NORMALLY OPEN WITH TIME DELAY CLOSING
TD1 — NORMALLY CLOSED WITH TIME DELAY OPENING
DE-ENERGIZED
TD1 — NORMALLY OPEN WITH INSTANT CLOSING AND TIME DELAY OPENING
TD1 — NORMALLY CLOSED WITH INSTANT OPENING AND TIME DELAY CLOSING
START — NORMALLY OPEN PUSHBUTTON
STOP — NORMALLY CLOSED PUSHBUTTON
OFF / ON — NO/NC MAINTAINED PUSHBUTTON
X — PILOT LIGHT
X = LENS COLOR
R — RED
G — GREEN
A — AMBER
W — WHITE
X — PILOT LIGHT (PUSH-TO-TEST)
X = LENS COLOR (SEE ABOVE)
HORN
ETM — ELAPSED TIME METER
HEATER
GROUND CONNECTION
CROSSING OF CONDUCTORS - NOT CONNECTED
CROSSING OF CONDUCTORS - CONNECTED
FUSE
VOLTAGE SURGE SUPPRESSOR

LIGHTING SYMBOLS

X-#a — LUMINAIRE
X = LIGHTING PANEL DESIGNATION
# = CIRCUIT NUMBER
a = SWITCH DESIGNATION

WALL MOUNTED LUMINAIRE
POLE, BRACKET, ARM, AND STREETLIGHT
FLUORESCENT LUMINAIRE
E — EMERGENCY LUMINAIRE
BATTERY OPERATED
EXIT LIGHT, SHOWN WITH TWO ILLUMINATED SIDES, ARROWS INDICATE DIRECTION OF EXIT

A / # — LUMINAIRE CALLOUT
A = LUMINAIRE TYPE
* = APPROXIMATE MOUNTING HEIGHT AFF
CLG = CEILING MOUNT
(SEE LUMINAIRE SCHEDULE FOR MORE DETAILS)

X-#a / $* — LIGHT SWITCH
X = LIGHTING PANEL DESIGNATION
# = CIRCUIT DESIGNATION
a = SWITCH DESIGNATION
* = SWITCH TYPE
3 — 3 WAY
4 — 4 WAY
D — DIMMER
M — MANUAL MOTOR STARTER

X-# / * — 120V DUPLEX RECEPTACLE, NEMA CONFIGURATION 5-20R (WALL MOUNT)
X = PANELBOARD DESIGNATION
# = CIRCUIT DESIGNATION
* = TYPE
WP — WEATHERPROOF
XP — EXPLOSION PROOF
GFCI — GROUND FAULT CIRCUIT INTERRUPTER

120V DUPLEX RECEPTACLE, NEMA CONFIGURATION 5-20R (FLOOR MOUNT)
X — WELDING RECEPTACLE
X = AMPERAGE
X — SPECIAL PURPOSE RECEPTACLE, 480 VAC
X = AMPERAGE

Sheet No.	DWG No.	Title
96	E001	ELECTRICAL SYMBOLS
97	E002	ELECTRICAL ABBREVIATIONS AND GENERAL NOTES
98	E003	SINGLE LINE DIAGRAM/LOAD CALCULATIONS
99	E004	MSB-100/MCC-100 ELEVATIONS
100	E005	CONDUIT AND CONDUCTOR SCHEDULE
101	E006	VFD ELEMENTRAY DIGRAM (CONTROLLED FROM MCC)
102	E007	FVNR ELEMENTRAY DIGRAM (CONTROLLED FROM MCC)
103	E008	TYPICAL CONTROL PANEL ELEVATION
104	E009	TYPICAL CONTROL PANEL ELEMENTRAY DIAGRAMS
105	E010	EXAMPLE PLC IO WIRING DIGRAM 1
106	E011	EXAMPLE PLC IO WIRING DIGRAM 2
107	E012	EXAMPLE INTERCONNECT DIGRAM
108	E013	TYPICAL ELECTRICAL DETAILS 1
109	E014	TYPICAL ELECTRICAL DETAILS 2
110	E015	TYPICAL ELECTRICAL DETAILS 3
111	E016	TYPICAL ELECTRICAL DETAILS 4
112	E020	OVERALL ELECTRICAL SITE PLAN
113	E021	CONTROL BUILDING AND HEADWORKS ELECTRIACL SITE PLAN
114	E022	FLUSH AND EQUALIZATION ELECTRICAL PLAN
115	E023	MSB-100 AND UTILITY SERVICE ELECTRICAL PLAN
116	E024	MCC-100 ELECTRICAL PLAN
117	E100	HEADWORKS OVERALL AREA ELECTRICAL PLAN
118	E101	HEADWORKS ELECTRICAL PLAN
119	E105	CHEMICAL SYSTEM ELECTRICAL PLAN
120	E200	EXISTING OPERATIONS BUILDING ELECTRICAL PLAN
121	I001	INSTRUMENT SYMBOLS AND ABBREVIATIONS
122	I100	HEADWORKS P&ID
123	I110	PRIMARY PUMP STATION P&ID
124	I120	STATON DISCHARGE P&ID
125	I130	FLUSH & EQUALIZATION P&ID
126	I140	CHEMICAL SYSTEM P&ID
127	I150	EMERGENCY STORAGE P&ID
128	I190	MICELLANEOUS P&ID

Revision	By	Appd	YYYY.MM.DD
BID SET	MGB	JP	2022.09.01
Issued	By	Appd	YYYY.MM.DD

Permit/Seal
REGISTERED PROFESSIONAL ENGINEER — JEREMY J. POLLETT — No. 017557 — Exp. 6-30-2023 — ELECTRICAL — STATE OF CALIFORNIA

Consultant
ControlPoint Engineering, Inc.
3941 Park Drive, Unit 20
El Dorado Hills, CA 95762
T 916.817.1376
F 916.760.1378

Stantec
Stantec Consulting Services Inc.
3875 Atherton Road
Rocklin CA 95765-3716
Tel: (916) 773-8100
www.stantec.com

Copyright Reserved
The Contractor shall verify and be responsible for all dimensions. DO NOT scale the drawing - any errors or omissions shall be reported to Stantec without delay. The Copyrights to all designs and drawings are the property of Stantec. Reproduction or use for any purpose other than that authorized by Stantec is forbidden.

Client/Project Logo

Client/Project
City of San Juan Bautista
SANITARY SEWER FORCE MAIN
San Juan Bautista, California

File Name: SANJ21-001-E001 | KB Dwn. | MSB Dsgn. | JP Chkd. | 2022.04.01 YYYY.MM.DD

Title
ELECTRICAL SYMBOLS

Project No. 184031441
Scale NTS
Revision
Sheet 96 of 128
Drawing No. E001

ORIGINAL SHEET - ANSI D

C:\projects\sanj21-001 san juan bsp\dwt\unit\sanj21-001-e001 2022.08.31 7:41:37 PM

ELECTRICAL ABBREVIATIONS

A	AMPERE, AUTOMATIC
AC	ALTERNATING CURRENT
AF	CIRCUIT BREAKER FRAME SIZE
AHF	ACTIVE HARMONIC FILTER
AM	AMMETER
ANN	ANNUNCIATOR
ASD	ADJUSTABLE SPEED DRIVE
AT	AMPERE TRIP
ATS	AUTOMATIC TRANSFER SWITCH
AUTO	AUTOMATIC
AWG	AMERICAN WIRE GAUGE
BATT	BATTERY
BC	BARE COPPER
BKR	BREAKER
C	CONDUIT, CLOSED
CB	CIRCUIT BREAKER
CKT	CIRCUIT
CLF	CURRENT LIMITING FUSE
CLG	CEILING
COM	COMMON
COMM	COMMUNICATIONS
COMP	COMPARTMENT
CP	CONTROL PANEL
CPT	CONTROL POWER TRANSFORMER
CR	CONTROL RELAY, CARD READER
CT	CURRENT TRANSFORMER
DCS	DISTRIBUTED CONTROL SYSTEM
DISC	DISCONNECT
DISTR	DISTRIBUTION
DP	DISTRIBUTION PANEL
DPDT	DOUBLE POLE DOUBLE THROW
DPST	DOUBLE POLE SINGLE THROW
E	EMERGENCY
EMT	ELECTRICAL METALLIC TUBING
ENCL	ENCLOSURE
ETM	ELAPSED TIME METER
EUPS	ENGINE UTILITY PARALLELING SYSTEM
F	FREQUENCY, FUSE, FIXED
FDR	FEEDER
FLA	FULL LOAD AMPS
FLUOR	FLUORESCENT
FM	FREQUENCY METER
FO	FIBER OPTIC
FPR	FEEDER PROTECTION RELAY
FVR	FULL VOLTAGE REVERSING
FVNR	FULL VOLTAGE NON-REVERSING
GEN	GENERATOR
GFCI	GROUND FAULT CIRCUIT
GFP	INTERRUPTER
GND	GROUND FAULT PROTECTION GROUND
H	HAND
HH	HAND HOLE
HID	HIGH INTENSITY DISCHARGE
HOA	HAND-OFF-AUTOMATIC
HPS	HIGH PRESSURE SODIUM
HRN	HORN
HS	HAND SWITCH
HZ	HERTZ
IMC	INTERMEDIATE METALLIC CONDUIT
INCAND	INCANDESCENT
IND	INDICATION
INST	INSTANTANEOUS
I/O	INPUT/OUTPUT
Isc	SHORT CIRCUIT CURRENT, AMPS
ISO	ISOLATION
J,JB	JUNCTION BOX
KA	KILO AMPERES
KAIC	KILO AMP INTERRUPTING CURRENT
KCMIL	KILO CIRCULAR MILS
KV	KILOVOLT
KVA	KILOVOLT AMPERE
KW	KILOWATT
LCP	LOCAL CONTROL PANEL
LCS	LOCAL CONTROL STATION
LOC	LOCAL
LOR	LOCAL-OFF-REMOTE
LOS	LOCKOUT STOP PUSHBUTTON
LP	LIGHTING PANEL
LRA	LOCKED ROTOR AMPS
LS	LEVEL SWITCH
LTCP	LIGHTING CONTROL PANEL
LTG	LIGHTING
LTS	LIGHTS
M	MOTOR CONTACTOR COIL
mA	MILLIAMPERE
MCC	MOTOR CONTROL CENTER
MCP	MOTOR CIRCUIT PROTECTOR
MLO	MAIN LUGS ONLY
MOV	MOTOR OPERATED VALVE
MSC	MANUFACTURER SUPPLIED CABLE
MTS	MANUAL TRANSFER SWITCH
NEUT	NEUTRAL
NP	NAMEPLATE
O	OPEN, OFF
OL	OVERLOAD
PA	PUBLIC ADDRESS
PB	PUSHBUTTON, PULLBOX
PC	PHOTOCELL
PCM	PROCESS CONTROL MODULE
PF	POWER FACTOR
PFM	POWER FACTOR METER
PH	PHASE
PL	PILOT LIGHT
PLC	PANELBOARD
PNLBD	PROGRAMMABLE LOGIC CONTROLLER
PP	POWER PANELBOARD
POS	POSITION
POT	POTENTIOMETER
PRI	PRIMARY
PT	POTENTIAL TRANSFORMER
PTZ	PAN-TILT-ZOOM
PWR	POWER
R	REMOTE
RECPT	RECEPTACLE
RGS	RIGID GALVANIZED STEEL
RMS	ROOT MEAN SQUARE
RTU	REMOTE TERMINAL UNIT
RVSS	REDUCED VOLTAGE SOLID STATE
SEL SW	SELECTOR SWITCH
SEQ	SEQUENCE
SHLD	SHIELDED
SIG	SIGNAL
SP	SPARE
SP HTR	SPACE HEATER
SPD	SURGE PROTECTIVE DEVICE
SPDT	SINGLE POLE DOUBLE THROW
SPST	SINGLE POLE SINGLE THROW
SSM	SOLID STATE METER
SSMP	SOLID STATE MOTOR PROTECTOR
ST, SH	SHUNT TRIP
STB	STANDBY
STR	STARTER
SSTU	SOLID STATE TRIP UNIT
SW	SWITCH
SWBD	SWITCHBOARD
SWGR	SWITCHGEAR
TB	TERMINAL BOX
TERM	TERMINAL
TM	REPEAT CYCLE TIMER
TD	TIME DELAY RELAY
TS	TEMPERATURE SWITCH
UPR	UTILITY PROTECTION RELAY
UPS	UNINTERRUPTIBLE POWER SUPPLY
V	VOLTAGE, VOLTS
VA	VOLT AMPERE
VAR	VOLT AMPERE REACTIVE
VM	VOLTMETER
VP	VAPOR PROOF
W	WATTS, WIRE
WM	WATT METER
WP	WEATHERPROOF
XFMR	TRANSFORMER
XMTR	TRANSMITTER
XP	EXPLOSION PROOF

GENERAL ELECTRICAL NOTES

1. ALL RACEWAYS AND EQUIPMENT SHALL BE INSTALLED AND GROUNDED IN ACCORDANCE WITH THE 2020 EDITION OF THE NATIONAL ELECTRICAL CODE AND APPLICABLE LOCAL CODES.
2. THE CONTRACTOR SHALL VERIFY THE EXACT LOCATION OF TERMINAL BOXES AND CONDUIT ENTRANCES OF ALL EQUIPMENT AGAINST APPROVED SHOP DRAWINGS BEFORE STUBBING UP CONDUITS.
3. REFER TO SPECIFICATION SECTION 16110 FOR REQUIREMENTS RELATED TO FLEXIBLE CONDUIT INSTALLATION.
4. CONDUIT RUNS ARE SHOWN DIAGRAMMATICALLY ONLY AND SHALL BE INSTALLED IN A MANNER TO PREVENT CONFLICTS WITH EQUIPMENT OR STRUCTURAL CONDITIONS. EXPOSED CONDUIT SHALL BE INSTALLED PARALLEL OR PERPENDICULAR TO BEAMS AND WALLS.
5. CONDUIT STUB-UPS SHALL NOT BE MORE THAN 6 INCHES FROM THE CENTERLINE OF TERMINAL BOXES.
6. IN THE EVENT OF INTERFERENCE BETWEEN ELECTRICAL EQUIPMENT SHOWN ON THE DRAWINGS AND OTHER EQUIPMENT, THE CONTRACTOR SHALL NOTIFY THE ENGINEER IN WRITING.
7. LOCATION OF PULLBOXES ARE APPROXIMATE. THE CONTRACTOR SHALL COORDINATE EXACT LOCATION WITH MECHANICAL PIPING AND SHALL BE 6 INCHES (MINIMUM) AWAY FROM MECHANICAL PIPING FLOW LINES.
8. ONLY MAJOR PULLBOXES ARE SHOWN. THE CONTRACTOR SHALL PROVIDE ADDITIONAL PULLBOXES WHERE REQUIRED TO MAKE A WORKABLE INSTALLATION.
9. THE WORK SHALL BE PERFORMED IN ACCORDANCE WITH THE DETAILS WHETHER OR NOT THEY ARE REFERENCED ON THE DRAWINGS.
10. ALL CONDUIT RUNS CROSSING EXPANSION JOINTS SHALL HAVE EXPANSION OR EXPANSION AND DEFLECTION TYPE FITTINGS. FOR LOCATIONS OF EXPANSION JOINTS, REFER TO THE STRUCTURAL DWGS.
11. LUMINAIRES SHALL BE MOUNTED ACCORDING TO THE MOUNTING HEIGHT GIVEN ON THE DRAWINGS, WITH THE DISTANCE BEING MEASURED FROM THE BOTTOM OF THE LUMINAIRE TO THE FINISHED FLOOR. THE APPROPRIATE MOUNTING BRACKETS AND HARDWARE SHALL BE SUPPLIED.
12. THE WIRING DIAGRAMS, QUANTITY AND SIZE OF WIRES AND CONDUIT REPRESENT A SUGGESTED ARRANGEMENT BASED UPON SELECTED STANDARD COMPONENTS OF ELECTRICAL EQUIPMENT. MODIFICATIONS ACCEPTABLE TO THE ENGINEER MAY BE MADE BY THE CONTRACTOR TO ACCOMMODATE EQUIPMENT ACTUALLY PURCHASED. THE BASIC SEQUENCE AND METHOD OF CONTROL MUST BE MAINTAINED AS INDICATED ON THE DRAWINGS AND/OR SPECIFICATIONS.
13. CONNECTIONS BETWEEN RIGID CONDUIT AND MOTOR TERMINAL BOXES OR SIMILAR EQUIPMENT SUBJECT TO VIBRATION SHALL BE FLEXIBLE LIQUID-TIGHT CONDUIT.
14. CONDUITS SHALL BE TERMINATED SO AS TO PERMIT NEAT CONNECTION TO MOTORS AND OTHER EQUIPMENT.
15. CONDUITS FOR FUTURE EQUIPMENT OR EXTENSIONS SHALL BE TERMINATED AS SHOWN IN DETAIL OR AS SPECIFIED.
16. MCC COMPARTMENT DESIGNATIONS SHALL BE AS FOLLOWS:

    BLANK/SPACE: CONTAINS NECESSARY BUS AND HARDWARE FOR FUTURE ADDITION OF BREAKERS OR STARTERS.

    SPARE: CONTAINS A COMPLETE INSTALLED BREAKER OR STARTER AVAILABLE FOR FUTURE USE.
17. ALL MOTOR STARTER CONTROL POWER TRANSFORMERS SHALL BE SIZED TO PROVIDE SUFFICIENT VOLT-AMPERE CAPACITY FOR OPERATING ALL LOCAL AND REMOTE ELECTRICAL DEVICES ASSOCIATED WITH CONTROL OF THE MOTOR IN ADDITION TO THE STARTER COIL.
18. MOTOR CONTROL CENTERS AND ALL FREE STANDING PANELS SHALL BE SET ON CONCRETE HOUSEKEEPING PADS WITH LEVELING CHANNELS EMBEDDED IN THE PAD.
19. ALL RECEPTACLES IN OUTDOOR AND ANTICIPATED WET AREAS SHALL BE GROUND FAULT CIRCUIT INTERRUPTER RECEPTACLES WITH WEATHERPROOF COVERS.

GENERAL ELECTRICAL NOTES (CONT.)

20. ELECTRICAL CONTRACTOR SHALL VISIT THE SITE PRIOR TO BIDDING THE PROJECT TO VERIFY THE SCOPE OF WORK WITH FIELD CONDITIONS. PARTICULAR ATTENTION SHOULD BE GIVEN TO NEW CONDUIT RUNS IN EXISTING BUILDINGS.
21. EQUIPMENT LOCKOUTS SHALL BE IN STRICT ACCORDANCE WITH OWNER'S REQUIREMENTS.
22. FOR LIGHTING AND RECEPTACLE SYSTEMS, ONLY CIRCUIT NUMBERS ARE SHOWN. CONTRACTOR SHALL PROVIDE ALL NECESSARY CONDUITS, WIRES,FITTINGS, JUNCTION BOXES AND ALL NECESSARY COMPONENTS SHOWN OR NOT SHOWN ON THE DRAWINGS, TO MAKE THE ELECTRICAL INSTALLATION COMPLETE AND OPERATIONAL. ALL CONDUIT RUNS SHALL BE CONCEALED UNLESS INDICATED OTHERWISE. CIRCUIT LOADING SHALL BE AS INDICATED IN THE PANEL SCHEDULES. ALL LIGHTING AND RECEPTACLE CIRCUITS SHALL INCLUDE GROUND WIRE.
23. CONTRACTOR SHALL BE ADVISED THAT EVERY ATTEMPT HAS BEEN MADE TO INCLUDE ALL CONDUITS IN THE DUCTBANK SCHEDULES AND CONDUIT DEVELOPMENT DRAWINGS FOR SPECIFIC FACILITIES, HOWEVER THE CONTRACTOR IS RESPONSIBLE FOR ANY CONDUIT/WIRE THAT IS NOT SHOWN.
24. ALL UNDERGROUND FACILITIES SHALL BE PROTECTED FROM DAMAGE. IF ANY UNDERGROUND FACILITIES ARE DAMAGED, IT SHALL BE REPORTED TO THE ENGINEER AND CONTRACTOR SHALL REPLACE OR REPAIR FACILITIES AT NO COST TO THE OWNER.
25. THE FINAL DESIGN FOR CONCRETE EQUIPMENT PADS AND FOUNDATIONS SHALL BE PROVIDED BY THE CONTRACTOR IN A DESIGN-BUILD FORMAT. REFERENCE SPECIFICATION SECTIONS:
    * 01610: SEISMIC DESIGN CRITERIA
    * 01615: WIND DESIGN CRITERIA
    * 02020: GEOTECHNICAL REPORT

    PROVIDE STAMPED, SIGNED CALCULATIONS AND DRAWING FOR REVIEW AND APPROVAL OF THE ENGINEER BY A REGISTERED CIVIL OR STRUCTURAL ENGINEER N THE STATE OF CALIFORNIA.

ELECTRICAL DEMOLITION NOTES

1. BIDDING CONTRACTORS SHALL VISIT THE SITE TO ASSESS THE SCOPE OF DEMOLITION, REMOVAL AND MODIFICATION WORK.
2. THE ELECTRICAL CONTRACTOR AND THE OWNER SHALL DE-ENERGIZE ALL WIRING PRIOR TO REMOVAL OF EQUIPMENT, DEVICES, MOTORS INSTRUMENTATION, CONTROL PANELS, ETC. CONTRACTOR SHALL OBTAIN PRIOR APPROVAL FROM THE OWNER.
3. EXPOSED RACEWAYS: REMOVE CONDUIT, WIRES, AND BOXES. PATCH TO MATCH EXISTING. FINISH-ALL OPENINGS IN WALLS AND FLOORS.
4. CONCEALED CONDUITS IN THE SLAB: REMOVE EXISTING WIRES TO THE EXTENT POSSIBLE AND ABANDON CONDUITS IN THE SLAB. CUT CONDUIT FLUSH AND PATCH THE FLOOR TO MATCH EXISTING.

Revision	By	Appd	YYYY.MM.DD

Issued	By	Appd	YYYY.MM.DD
BID SET	MGB	JP	2022.09.01

Permit/Seal

REGISTERED PROFESSIONAL ENGINEER — JEREMY J. POLLETT — NO.017557 — Exp.6-30-2023 — ELECTRICAL — STATE OF CALIFORNIA

Consultant

ControlPoint Engineering, Inc.
3941 Park Drive, Unit 20
El Dorado Hills, CA 95762

T 916.817.1376
F 916.760.1378

Stantec

Stantec Consulting Services Inc.
3875 Atherton Road
Rocklin CA 95765-3716
Tel:(916) 773-8100
www.stantec.com

Copyright Reserved

The Contractor shall verify and be responsible for all dimensions. DO NOT scale the drawing - any errors or omissions shall be reported to Stantec without delay.
The Copyrights to all designs and drawings are the property of Stantec. Reproduction or use for any purpose other than that authorized by Stantec is forbidden.

Client/Project Logo

Client/Project

City of San Juan Bautista

SANITARY SEWER FORCE MAIN

San Juan Bautista, California

File Name: SANJ21-001-E002	KB	MSB	JP	2022.04.01
	Dwn.	Dsgn.	Chkd.	YYYY.MM.DD

Title

ELECTRICAL ABBREVIATIONS AND GENERAL NOTES

Project No.	Scale
184031441	NTS

Revision	Sheet	Drawing No.
	97 of 128	E002

ORIGINAL SHEET - ANSI D

C:\projects\sanj21-001\san juan bast\drl\sanj21-001-e002 2022.09.01 7:44:07 PM

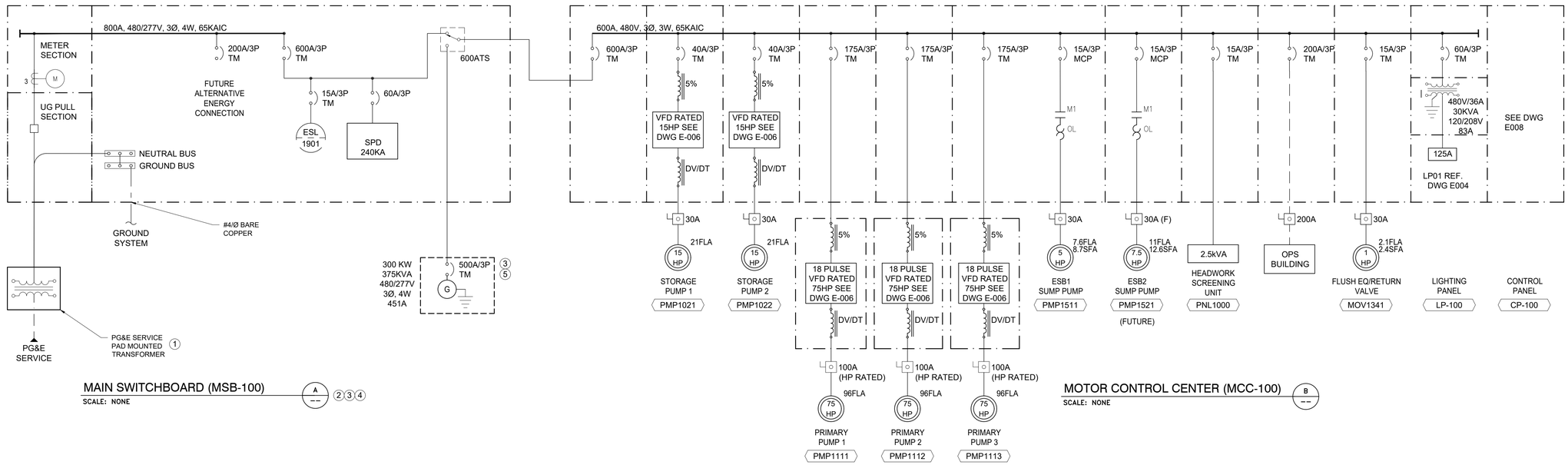

MAIN SWITCHBOARD (MSB-100) — A — 2 3 4

SCALE: NONE

MOTOR CONTROL CENTER (MCC-100) — B

SCALE: NONE

GENERAL NOTES

A. ALL FIELD EQUIPMENT SHALL BE RATED AS NOTED BY ELECTRICAL SPECIFICATIONS AND ELECTRICAL SITE PLANS UNLESS NOTED OTHERWISE BY THIS DRAWING.

SHEET NOTES

1. PG&E PAD MOUNTED XFMR SHALL BE FURNISHED AND INSTALLED BY PG&E.
2. SWITCHBOARD SECTIONS, CTS SPACING AND INSTALLATION SHALL CONFORM TO EUSERC STANDARDS AS REQUIRED BY PG&E SERVICE REQUIREMENTS.
3. FURNISH AND INSTALL CB WITH PERMANENT LOCKOUT PROVISIONS.
4. FURNISH AND INSTALL 120W (MIN.) SPACE HEATER PER MSB SECTION TO PREVENT MOISTURE FORMATION AS RECOMMENDED BY MSB MANUFACTURER.
5. STANDBY GENERATOR CIRCUIT BREAKER TRIP SETTING SHALL BE ADJUSTED IN ACCORDANCE WITH PROTECTIVE STUDY CONDITION.

SERVICE LOAD CALCULATION

LOAD CENTER: *MSB* — 480 VAC, 3 PHASE — 4-WIRE

FED FROM: *UTILITY*

EQUIPMENT DESCRIPTION		CONNECTED LOAD AMPS	CONNECTED LOAD (KVA)	UTILITY LOAD (KVA)	GENERATOR LOAD (KVA)
MCC 100	*MOTOR CONTROL CENTER 100*	*387.2*	*321.9*	*324.4*	*289.0*
SUBTOTAL (KVA)			321.9	324.4	289.0
SUBTOTAL (AMPS)			387.2	390.2	347.6
UTILITY:		**GENERATOR:**			
SERVICE SIZE	387 A			**SERVICE SIZE**	348 A
MAIN BREAKER SIZE	600 A		**GEN SIZE**	**300 KW**	451 A
% LOADED	65%			**% LOADED**	77%

LOAD CALCULATION

LOAD CENTER: **MCC 100** — 480 VAC, 3 PHASE SERVICE — 3-WIRE

FED FROM: **MSB**

EQUIPMENT NUMBER	HP / KVA	MOTOR CONTROL	EQUIPMENT DESCRIPTION	CONNECTED LOAD (AMPS)	CONNECTED QTY	CONNECTED LOAD (KVA)	UTILITY LOAD Q'TY	UTILITY LOAD (KVA)	GENERATOR LOAD Q'TY	GENERATOR LOAD (KVA)
PNL1000	1.5	CB	HEADWORKS SCREENING UNIT	3.0	1	2.5	1	2.5	1	2.5
PMP1511,2	15	VFD	STORAGE PUMPS 1 & 2	21.0	2	34.9	1	17.5	1	17.5
PMP1111~3	75	VFD	PRIMARY PUMPS 1~3	96.0	3	239.4	3	239.4	3	239.4
PMP1311	5	FVNR	EMERGENCY STORAGE BASIN 1 RETURN PUMP	7.6	1	6.3	1	6.3	0	0.0
PMP1411	7.5	FVNR	EMERGENCY STORAGE BASIN 2 RETURN PUMP	11.0	1	9.1	1	9.1	0	0.0
MOV1341	1	CB	FLUSH/ EQ RETURN VALVE	2.1	1	1.7	1	1.7	1	1.7
OPS BUILDING	1	CB	OPERATIONS BUILDING	20.0	1	16.6	1	16.6	1	16.6
LP 100	45 kVA	XFMR	LIGHTING PANEL LP 100	13.5	1	11.2	1	11.2	1	11.2
SUBTOTAL						321.9		304.4		289.0
LARGEST MOTOR @ 25%				75	HP			20.0		
TOTAL								324.4		289.0

3 PHASE CURRENT	390	AMPS
	100%	MAXIMUM LOAD CURRENT
CALCULATED SERVICE SIZE	390	AMPS
MAIN BREAKER SIZE	600	AMPS
% MAIN BREAKER LOAD	65%	

UTILITY DIVISION OF WORK

DESCRIPTION OF WORK	ELECTRICAL CONTRACTOR	UTILITY COMPANY
PRIMARY CONDUITS	√	
PRIMARY CONDUCTORS		√
PRIMARY UTILITY VAULTS (IF SHOWN)	√	
SECONDARY CONDUITS	√	
SECONDARY CONDUCTORS		√
TRANSFORMER PAD	√	
TRANSFORMER		√
TRANSFORMER CONNECTIONS		√
BOLLARDS	√	
METER ENCLOSURE AND BASE	√	
UTILITY METER		√
CT ENCLOSURE	√	
CURRENT TRANSFORMERS (CT)		√
METER ROOM LOCKBOX	N/A	

POWER UTILITY INFORMATION

UTILITY COMPANY	PG&E
CONTACT NAME	DAVID MCKENNA
PHONE NUMBER	(831) 682-7669
FAX NUMBER	
EMAIL	DWMU@PGE.COM
STREET ADRESS	401 WORK STREET
CITY, STATE ZIP	SALINAS, CA. 93901

Revision	By	Appd	YYYY.MM.DD

Issued	By	Appd	YYYY.MM.DD
BID SET	MGB	JP	2022.09.01

Permit/Seal

REGISTERED PROFESSIONAL ENGINEER — JEREMY J. POLLET — NO.017557 — Exp.6-30-2023 — ELECTRICAL — STATE OF CALIFORNIA

Consultant

ControlPoint Engineering, Inc.
3941 Park Drive, Unit 20
El Dorado Hills, CA 95762

T 916.817.1376
F 916.760.1378

Stantec

Stantec Consulting Services Inc.
3875 Atherton Road
Rocklin CA 95765-3716
Tel:(916) 773-8100
www.stantec.com

Copyright Reserved

The Contractor shall verify and be responsible for all dimensions. DO NOT scale the drawing - any errors or omissions shall be reported to Stantec without delay.
The Copyrights to all designs and drawings are the property of Stantec. Reproduction or use for any purpose other than that authorized by Stantec is forbidden.

Client/Project Logo

Client/Project

City of San Juan Bautista

SANITARY SEWER FORCE MAIN

San Juan Bautista, California

File Name: SANJ21-001-E003	KB	MSB	JP	2022.04.01
	Dwn.	Dsgn.	Chkd.	YYYY.MM.DD

Title

SINGLE LINE DIAGRAM/ LOAD CALCULATIONS

Project No. 184031441

Scale NTS

Revision

Sheet 98 of 128

Drawing No. E003

ORIGINAL SHEET - ANSI D

C:\projects\sanj21-001 san juan baut\civil\sanj21-001-e003 2022.08.17 7:43:56 PM

PANEL SCHEDULE												
LOCATION MCC 100				**MAIN BKR** 125A								
VOLTAGE 120/208Y				**SYSTEM** 3Φ, 4W								
TRIM FLUSH				**BUS RATING** 200A								
				PHASE LOADS-AMPS								
CKT	**LOAD**	**VA**	**AMPS**	**CB**	**A**	**B**	**C**	**CB**	**AMPS**	**VA**	**LOAD**	**CKT**
1	MSB ENVIROMENTAL	240	2.0	20/1	7.0			20/1	5.0	600	CHEMICAL SYSTEM PANEL	**2**
3	RECEPT-MSB	180	1.5	20/1		9.8		20/1	8.3	1000	INFLUENT SAMPLER	**4**
5	MCC ENVIROMENTAL	100	0.8	20/1			6.2	20/1	5.3	640	GENERATOR BATTERY CHARGER	**6**
7	RECEPT-MCC	180	1.5	20/1	11.5			20/2	10.0	1200		**8**
9	LTG - AREA	240	2.0	20/1		12.0			10.0	1200	GENERATOR BLOCK HEATER	**10**
11	RECEPT - AREA	360	3.0	20/1			4.0	20/1	1.0	120	CHEMICAL FILL STATION	**12**
13	SPARE	0	0.0	20/1	1.0			20/1	1.0	120	IRRIGATION CONTROLLER	**14**
15	SPARE	0	0.0	20/1		0.0		20/1	0.0	0	SPARE	**16**
17	SPARE	0	0.0	20/1			0.0	20/1	0.0	0	SPARE	**18**
Notes					**A**	**B**	**C**					
(L)	**Lockout Provision Required**				**20 A**	**22 A**	**10 A**					
(H)	**HACR - Rated Breaker**				**2340 VA**	**2620 VA**	**1220 VA**					
(GFI)	**Ground Fault Interupt Rated Breaker**				**PHASE LOADS**			**TOTAL**	**6180 VA**	**208 V**		
(AFI)	**Arc-Fault Interupt Rated Breaker**				**114%**	**127%**	**59%**	**AMPS**	**17 A**			

GENERAL NOTES

A. ALL FIELD EQUIPMENT SHALL BE RATED AS NOTED BY ELECTRICAL SPECIFICATIONS AND ELECTRICAL SITE PLANS UNLESS NOTED OTHERWISE BY THIS DRAWING.

SHEET NOTES

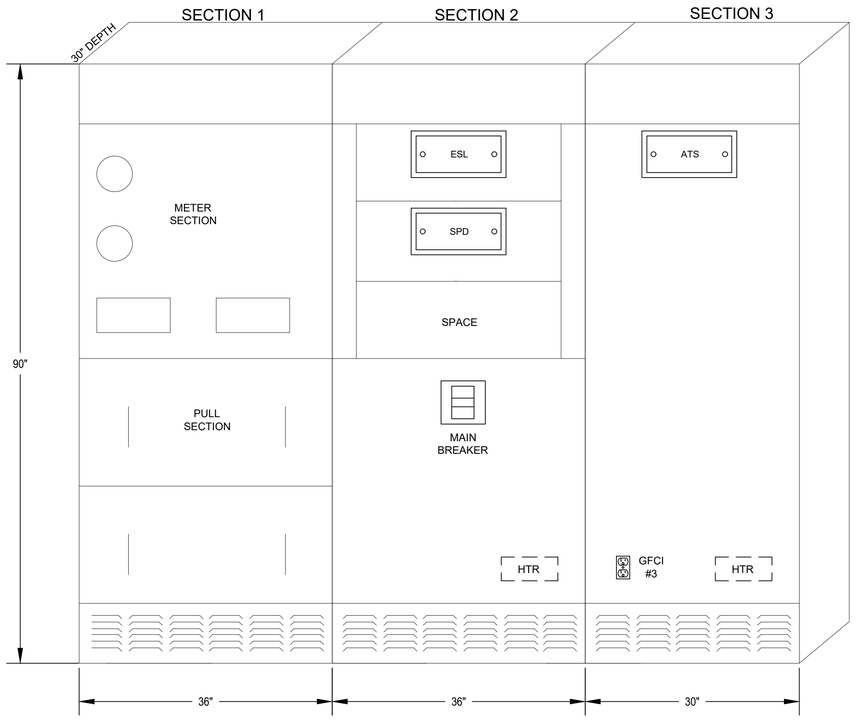

MAIN SWITCHBOARD (MSB-100)

A

SCALE: NONE

1. SHOWN WITH NEMA 3R WEATHER WRAP REMOVED. REF DWG E003
2. PROVIDE INTRUSION SWITCH (ZS) FOR EACH OUTER DOOR.

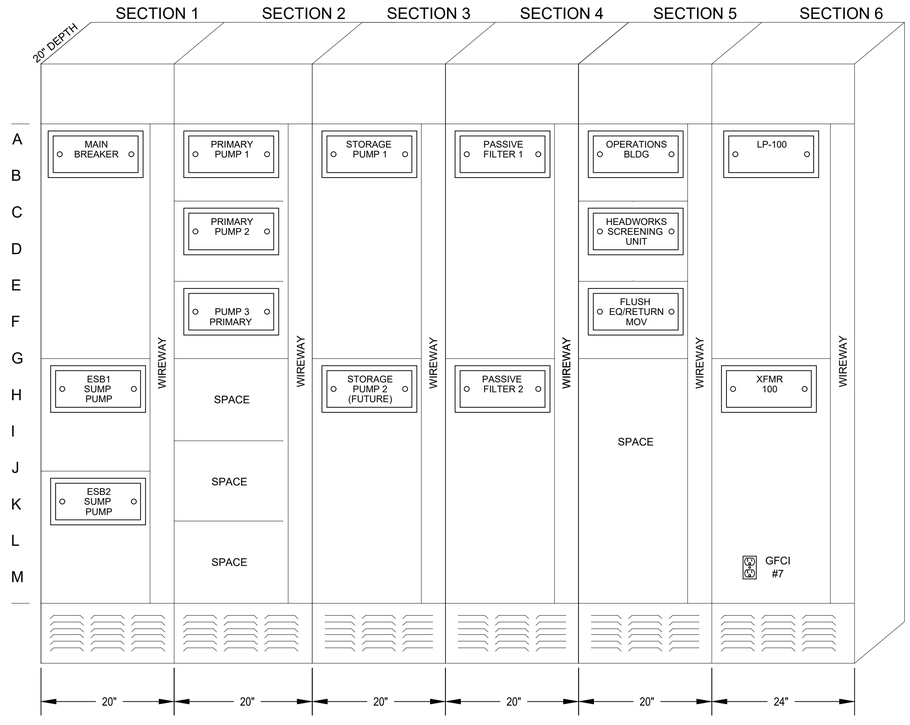

MOTOR CONTROL CENTER (MCC-100)

B

SCALE:NONE

1. SHOWN WITH NEMA 3R WEATHER WRAP REMOVED. REF DWG E003
2. PROVIDE INTRUSION SWITCH (ZS) FOR EACH OUTER DOOR.

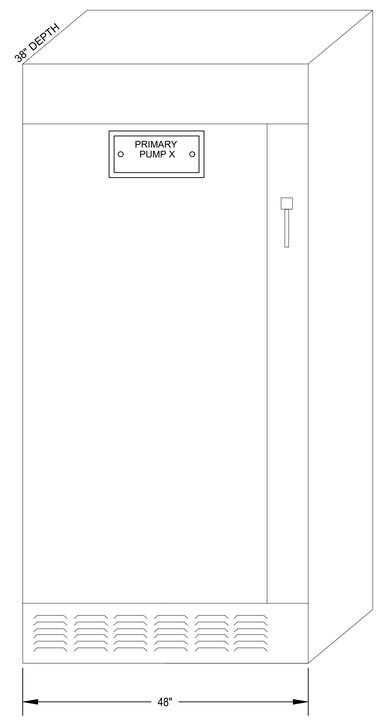

PRIMARY PUMP TYPICAL

C

SCALE:NONE

1. SHOWN WITH NEMA 3R WEATHER WRAP REMOVED. REF DWG E006
2. TYPICAL FOR PRIMARY PUMPS 1-3
3. PROVIDE INTRUSION SWITCH (ZS) FOR EACH OUTER DOOR.

Revision	By	Appd	YYYY.MM.DD

Issued	By	Appd	YYYY.MM.DD
BID SET	MGB	JP	2022.09.01

Permit/Seal

REGISTERED PROFESSIONAL ENGINEER — JEREMY J. POLLET — No. 017557 — Exp. 6-30-2023 — ELECTRICAL — STATE OF CALIFORNIA

Consultant

ControlPoint Engineering, Inc.
3941 Park Drive, Unit 20
El Dorado Hills, CA 95762

T 916.817.1376
F 916.760.1378

Stantec

Stantec Consulting Services Inc.
3875 Atherton Road
Rocklin CA 95765-3716
Tel:(916) 773-8100
www.stantec.com

Copyright Reserved

The Contractor shall verify and be responsible for all dimensions. DO NOT scale the drawing - any errors or omissions shall be reported to Stantec without delay. The Copyrights to all designs and drawings are the property of Stantec. Reproduction or use for any purpose other than that authorized by Stantec is forbidden.

Client/Project Logo

Client/Project

City of San Juan Bautista

SANITARY SEWER FORCE MAIN

San Juan Bautista, California

File Name: SANJ21-001-E004	KB	MSB	JP	2022.04.01
	Dwn.	Dsgn.	Chkd.	YYYY.MM.DD

Title

MSB-100/MCC-100 ELEVATIONS

Project No. 184031441

Scale NTS

Revision

Sheet 99 of 128

Drawing No. E004

ORIGINAL SHEET - ANSI D

C:\projects\sanj21-001 san juan baut\sch\sanj21-001-e004 2022.08.17 7:42:01 PM

CONDUIT AND CONDUCTOR SCHEDULE

PLAN DWG	CONDUIT	FROM	TO	CONDUIT			POWER WIRE			CONTROL WIRE			SIGNAL	GROUND	COMMENTS
E101	A1041	CONTROL PANEL CP 100	INFLUENT SAMPLER SMP 1041	1	1"	PVC-40	-	-	-	-	1	#16TSPR	#12	PACING SIGNAL
E100	A1071	CONTROL PANEL CP 100	FLOW METER FE 1071	2	1"	PVC-40	-	-	-	-	2	MSC	#12	MANUFACTURER CABLE
E100	A1072	CONTROL PANEL CP 100	FLOW METER FE 1072	2	1"	PVC-40	-	-	-	-	2	MSC	#12	MANUFACTURER CABLE
E024	A1111	MCC 100	DRV 1111	1	1"	PVC-40	-	-	-	-	2	#16TSPR	#12	
E024	A1112	MCC 100	DRV 1112	1	1"	PVC-40	-	-	-	-	2	#16TSPR	#12	
E024	A1113	MCC 100	DRV 1113	1	1"	PVC-40	-	-	-	-	2	#16TSPR	#12	
E100	A1150	CONTROL PANEL CP 100	PNL 1150	1	1"	PVC-40	-	-	2	#14	1	#16TSPR	#12	LEVEL DEVICES (IS)
E100	A1151	PNL 1150	PNL 1150	1	2"	PVC-80	-	-	-	-	3	MSC	-	LEVEL DEVICES (IS)
E100	A1271	CONTROL PANEL CP 100	FLOW METER FE 1271	2	1"	PVC-40	-	-	-	-	2	MSC	#12	MANUFACTURER CABLE
E022	A1341	CONTROL PANEL CP 100	MOV 1341	1	1"	PVC-40	-	-	-	-	2	#16TSPR	#12	POSITION COMMAND AND FEEDBACK
E022	A1351	CONTROL PANEL CP 100	FLUSH/EQ TANK LEVEL SENSOR	1	1"	PVC-40	-	-	-	-	1	#16TSPR	#12	LOOP POWERED LEVEL TRANSMITTER
E105	A1400	CHEMICAL SYSTEM CONTROL PANEL PNL 1400	CHEMICAL FILL STATION	1	1"	PVC-40	-	-	2	#14	1	#16TSPR	#12	LEVEL SIGNAL TO FILL STATION
E023	C0102	MSB/ATS 100	CONTROL PANEL CP 100	1	1"	PVC-40	-	-	20	#14	-	-	#12	GENERATOR STATUS, ATS POSITION, MSB STATUS, ZS+SPARES
E101	C1000	CONTROL PANEL CP 100	HEADWORKS SCREEN PANEL PNL 1000	1	1"	PVC-40	-	-	8	#14	-	-	#12	
E101	C1001	HEADWORKS SCREEN PANEL PNL 1000	SOLINOID VALVE	1	3/4"	GRS-PVC	-	-	2	#14	1		#12	WASH WATER SV-FINAL CONNECTION FLEX
E101	C1002	HEADWORKS SCREEN PANEL PNL 1000	LE/LSHH1051	1	3/4"	GRS-PVC	-	-	2	#14	1	#16TSPR	#12	ROTARY SCREEN LEVEL TRANSMITTER/HIGH LEVEL SWITCH
E101	C1021	MCC 100	DISC/FCS 1021	1	1"	PVC-40	-	-	4	#14	-	-	#12	LOS, OVERTEMP
E101	C1022	MCC 100	DISC/FCS 1022	1	1"	PVC-40	-	-	4	#14	-	-	#12	LOS, OVERTEMP
E024	C1111A	MCC 100	DRV 1111	1	1"	PVC-40	-	-	12	#14	-	-	#12	
E024	C1111B	DRV 1111	DISC/FCS 1111	1	1"	PVC-40	-	-	4	#14	-	-	#12	
E024	C1111C	MCC 100	DRV 1111	1	1"	PVC-40	-	-	2	#14	-	-	#12	
E024	C1112A	MCC 100	DRV 1112	1	1"	PVC-40	-	-	12	#14	-	-	#12	
E024	C1112B	DRV 1112	DISC/FCS 1112	1	1"	PVC-40	-	-	4	#14	-	-	#12	
E024	C1112C	MCC 100	DRV 1112	1	1"	PVC-40	-	-	2	#14	-	-	#12	
E024	C1113A	MCC 100	DRV 1113	1	1"	PVC-40	-	-	12	#14	-	-	#12	
E024	C1113B	DRV 1113	DISC/FCS 1113	1	1"	PVC-40	-	-	4	#14	-	-	#12	
E024	C1113C	MCC 100	DRV 1113	1	1"	PVC-40	-	-	2	#14	-	-	#12	
E022	C1341	CONTROL PANEL CP 100	MOV 1341	1	1"	PVC-40	-	-	4	#14	-	-	#12	MOV STATUS
E105	C1400	CHEMICAL SYSTEM CONTROL PANEL PNL 1400	CP 100	1	1"	PVC-40	-	-	6	#14	-	-	#12	ALARMS
E020	C1511	MCC 100	DISC/FCS 1511	1	1"	PVC-40			6	#14	-	-	#12	LOS
E020	C1521	MCC 100	PPB 102	1	1"	PVC-40	-	-	-	-	-	-	-	PULL ROPE (FUTURE PUMP)
E200	C1989	MSB/ATS 100	GENERATOR GEN 1989	1	1"	PVC-40	-	-	8	#14	-	-	#12	GEN START, GEN RUN, FAIL AND LOW FUEL STATUS
E101	D1000	CONTROL PANEL CP 100	HEADWORKS SCREEN PANEL PNL 1000	1	1"	PVC-40	-	-	-	-	1	CAT 6	#12	ETHERNET COMMUNICATION
E200	D1001	TELCO BOARD	SCADA SERVER	1	1"	GRS	-	-	-	-	2	CAT 6	#12	ETHERNET COMMUNICATION
E200	D1002	CP-100	SCADA SERVER	1	1"	PVC-40	-	-	-	-	2	CAT 6	#12	ETHERNET COMMUNICATION
E105	D1400	CONTROL PANEL CP 100	CHEMICAL SYSTEM PANEL PNL 1400	1	1"	PVC-40	-	-	-	-	1	CAT 6	#12	ETHERNET COMMUNICATION
E023	L1001	LP 100	MBS	1	1"	PVC-40	4	#10	-	-	-	-	#12	MSB RECEPT & ENVIRO
E105	L1002	LP 100	CHEMICAL SYSTEM PANEL PNL 1400	1	1"	PVC-40	2	#10	-	-	-	-	#12	
E101	L1004	LP 100	INFLUENT SAMPLER SMP 1041	1	1"	PVC-40	2	#12	-	-	-	-	#12	
E200	L1006	LP 100	GENERATOR GEN 1989	1	1"	PVC-40	4	#10	-	-	-	-	#12	BLOCK HEATER AND BATTERY CHARGER
E024	L1009A	LP 100	AREA LIGHT	1	1"	PVC-40	4	#10	-	-	-	-	#12	AREA LIGHTING & RECEPT
E023	L1009B	LP 100	AREA LIGHT	1	1"	PVC-40	4	#10	-	-	-	-	#12	AREA LIGHTING & RECEPT
E020	L1012	LP 100	CHEMICAL FILL STATION	1	1"	PVC-40	2	#12	-	-	-	-	#12	CHEMICAL FILL STATION
E021	L1014	LP 100	IRRIGATION CONTROLLER	1	1"	PVC-40	2	#12	-	-	-	-	#12	VIA PULL BOX PPB 98
E101	M1021	MCC 100	DISC/FCS 1021	1	1"	PVC-40			-	-	1	#16TSPR	#12	TEMP/MSH SENSOR
E101	M1022	MCC 100	DISC/FCS 1021	1	1"	PVC-40			-	-	1	#16TSPR	#12	TEMP/MSH SENSOR
E100	M1111	DRV 1111	DISC/FCS 1111	1	1"	PVC-40			-	-	1	#16TSPR	#12	TEMP/MSH SENSOR
E100	M1112	DRV 1112	DISC/FCS 1112	1	1"	PVC-40			-	-	1	#16TSPR	#12	TEMP/MSH SENSOR
E100	M1113	DRV 1113	DISC/FCS 1113	1	1"	PVC-40			-	-	1	#16TSPR	#12	TEMP/MSH SENSOR
E023	P0100	UTILITY POLE	UTILITY XFMR	1	4"	PVC-40	-	-	-	-	-	-	-	PER PG&E REQUIRMENTS
E023	P0101	UTILITY XFMR	MSB/ATS 100	2	5"	PVC-40	-	-	-	-	-	-	-	PER PG&E REQUIRMENTS
E023	P0102	MSB/ATS 100	MCC 100	2	4"	PVC-40	3	#350	-	-	-	-	#2/0	
E200	P0103	MCC 100	EXISTING OPS BUILDING	1	2"	PVC-40	4	#4/0	-	-	-	-	#4	
E101	P1000	MCC 100	HEADWORKS SCREEN PANEL PNL 1000	1	1"	PVC-40	3	#8	-	-	-	-	#10	
E101	P1011	HEADWORKS SCREEN PANEL PNL 1000	SCREEN DRIVE SCR 1011	1	1"	GRS-PVC	3	#12	2	#14	-	-	#12	FINAL CONNECTION FLEX
E101	P1021A	MCC 100	DISC/FCS 1021	1	1"	PVC-40	3	#12	-	-	-	-	#12	3 CONDUCTOR W/GROUND VFD RATED CABLE
E101	P1021B	DISC 1021	WETWELL	1	2"	PVC-80	-	-	-	-	1	MSC	-	W/BELL ENDS-MANUFACTURER SUBMERSIBLE CABLE
E101	P1022A	MCC 100	DISC/FCS 1022	1	1"	PVC-40	3	#12	-	-	-	-	#12	3 CONDUCTOR W/GROUND VFD RATED CABLE
E101	P1022B	DISC 1021	WETWELL	1	2"	PVC-80	-	-	-	-	1	MSC	-	W/BELL ENDS-MANUFACTURER SUBMERSIBLE CABLE
E024	P1111A	MCC 100	DRV 1111	1	2"	PVC-40	3	#2/0	-	-	-	-	#4	
E024	P1111B	DRV 1111	DISC/FCS 1111	1	1-1/2"	PVC-40	3	#1	-	-	-	-	#1	3 CONDUCTOR W/GROUND VFD RATED CABLE
E024	P1111C	DISC 1111	WETWELL	1	2"	PVC-80	-	-	-	-	1	MSC	-	W/BELL ENDS-MANUFACTURER SUBMERSIBLE CABLE
E024	P1112A	MCC 100	DRV 1112	1	2"	PVC-40	3	#2/0	-	-	-	-	#4	
E024	P1112B	DRV 1112	DISC/FCS 1112	1	1-1/2"	PVC-40	3	#1	-	-	-	-	#1	3 CONDUCTOR W/GROUND VFD RATED CABLE
E024	P1112C	DISC 1112	WETWELL	1	2"	PVC-80	-	-	-	-	1	MSC	-	W/BELL ENDS-MANUFACTURER SUBMERSIBLE CABLE
E024	P1113A	MCC 100	DRV 1113	1	2"	PVC-40	3	#2/0	-	-	-	-	#4	
E024	P1113B	DRV 1113	DISC/FCS 1113	1	1-1/2"	PVC-40	3	#1	-	-	-	-	#1	3 CONDUCTOR W/GROUND VFD RATED CABLE
E024	P1113C	DISC 1113	WETWELL	1	2"	PVC-80	-	-	-	-	1	MSC	-	W/BELL ENDS-MANUFACTURER SUBMERSIBLE CABLE
E022	P1341	MCC 100	DISC 1341	1	1"	PVC-40	3	#10	-	-	-	-	#12	
E022	P1511A	MCC 100	DISC/FCS 1511	1	1"	PVC-40	3	#6	-	-	-	-	-	
E022	P1511B	DISC 1511	EMERGENY POND SUB PUMP	1	2"	PVC-80	-	-	-	-	1	MSC	-	W/BELL ENDS-MANUFACTURER SUBMERSIBLE CABLE
E020	P1521A	MCC 100	PPB 102	1	1"	PVC-40	-	-	-	-	-	-	-	PULL ROPE (FUTURE PUMP)
E200	P1989	MSB/ATS 100	GENERATOR GEN 1989	2	4"	PVC-40	4	#350	-	-	-	-	#2/0	
E200	T0100	UTILITY POLE	PHONE BOARD	1	2"	PVC-40	-	-	-	-	-	-	-	PULL ROPE PER TELCO REQUIRMENTS
E024	X0010	MCC100	PPB100	2	1"	PVC-40	-	-	-	-	-	-	-	PULL ROPE
E024	X0011	MCC100	PPB99	2	1"	PVC-40	-	-	-	-	-	-	-	PULL ROPE
E024	X0012	MCC100	PPB101	2	1"	PVC-40	-	-	-	-	-	-	-	PULL ROPE

G / E014 (TYP FOR ALL CONDUITS)

Revision	By	Appd	YYYY.MM.DD

Issued	By	Appd	YYYY.MM.DD
BID SET	MGB	JP	2022.09.01

Permit/Seal

REGISTERED PROFESSIONAL ENGINEER — JEREMY J. POLLET — NO.017557 — Exp.6-30-2023 — ELECTRICAL — STATE OF CALIFORNIA

Consultant

ControlPoint Engineering, Inc.
3941 Park Drive, Unit 20
El Dorado Hills, CA 95762

T 916.817.1376
F 916.760.1378

Stantec

Stantec Consulting Services Inc.
3875 Atherton Road
Rocklin CA 95765-3716
Tel: (916) 773-8100
www.stantec.com

Copyright Reserved
The Contractor shall verify and be responsible for all dimensions. DO NOT scale the drawing - any errors or omissions shall be reported to Stantec without delay. The Copyrights to all designs and drawings are the property of Stantec. Reproduction or use for any purpose other than that authorized by Stantec is forbidden.

Client/Project Logo

Client/Project
City of San Juan Bautista
SANITARY SEWER FORCE MAIN
San Juan Bautista, California

File Name: SANJ21-001-E005 | KB Dwn. | MSB Dsgn. | JP Chkd. | 2022.04.01 YYYY.MM.DD

Title
CONDUIT AND CONDUCTOR SCHEDULE

Project No. 184031441 | Scale NTS
Revision | Sheet 100 of 128 | Drawing No. E005

ORIGINAL SHEET - ANSI D
C:\projects\sanj21-001\san juan bautista\civil\sanj21-001-e005 2022.08.31 7:43:17 PM

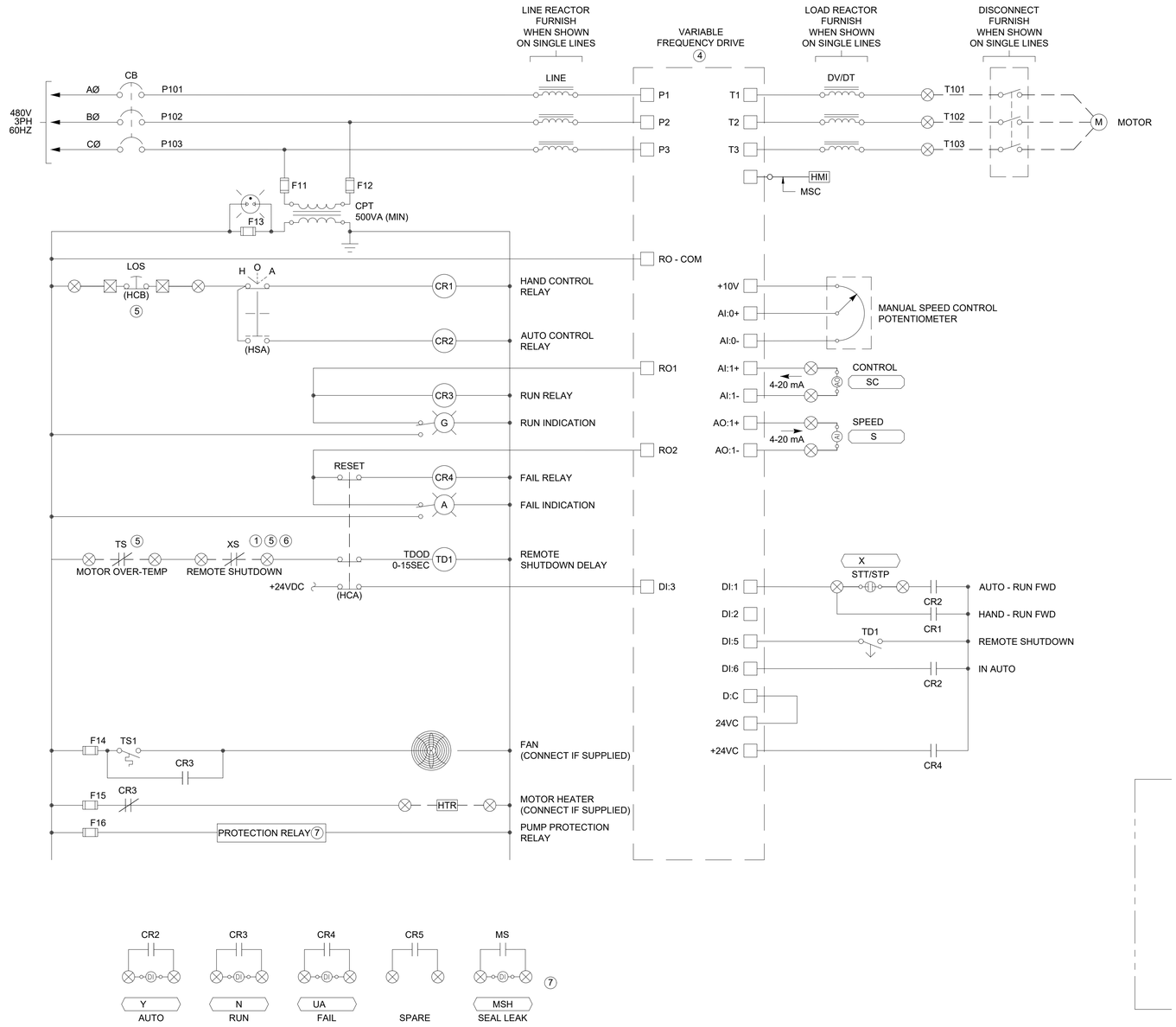

DETAIL 1 - VFD MOTOR CONTROL DIAGRAM (CONTROLLED FROM MCC)
SCALE: NONE

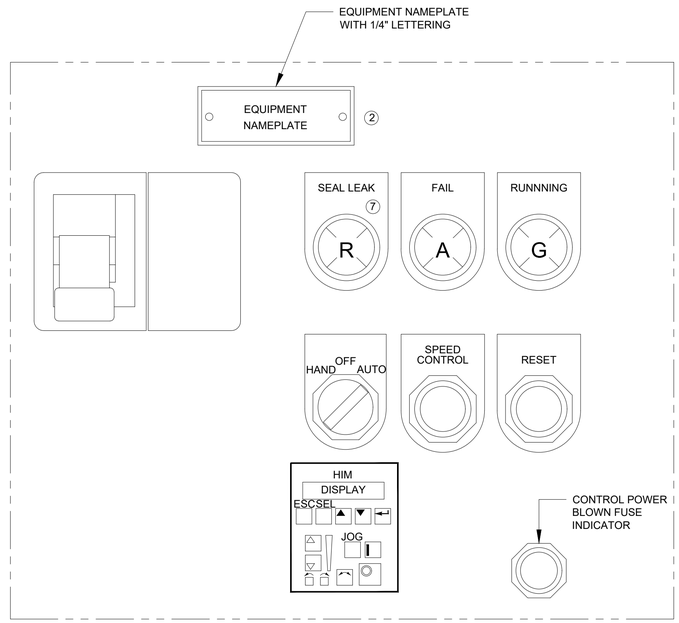

DETAIL 2 - MCC CUBICAL ELEVATION
SCALE: NONE

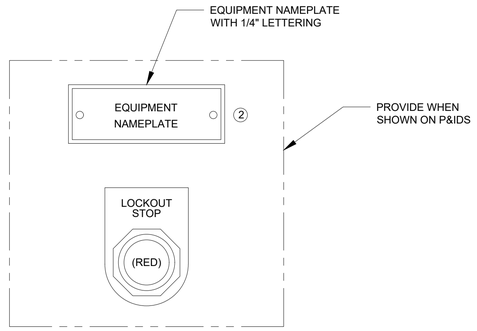

DETAIL 3 - FIELD CONTROL STATION ELEVATION
SCALE: NONE

GENERAL NOTES

A. THESE DRAWINGS SHOW GENERAL CONTROL PHILOSOPHY AND DEVICES. NOT ALL REQUIRED CONTROL COMPONENTS AND DEVICES ARE SHOWN. CONTRACTOR IS RESPONSIBLE TO PROVIDE COMPLETE AND FUNCTIONAL SYSTEM.

SHEET NOTES

1. REMOTE SHUTDOWN XS => LSLL, ZSHH, PSHH, ETC., PER P&ID, JUMPER IF NOT USED. THESE ARE TO BE CONTACTS OFF OF AUXILIARY RELAY CONTACTS LOCATED IN MCC CONTROL PANEL DRIVEN FROM FIELD DEVICE.
2. EQUIPMENT NAMEPLATE TO CONTAIN EQUIPMENT DESCRIPTION AND EQUIPMENT NUMBER PER ELEVATION DIAGRAM. MOUNT ON OR ABOVE DEVICE BOX ON FCS.
3. ILLUMINATED PUSH BUTTON RESET, TRIP CAUSE LED STATUS.
4. ELECTRONIC OVERLOAD WITH PHASE LOSS PROTECTION, DIGITAL CURRENT SETTING, GROUND FAULT TRIP, AND SELECTABLE TRIP CLASS.DRIVE TYPE AS SHOWN ON ONE LINE DIAGRAM.
5. JUMPER DEVICE IF NOT REQUIRED.
6. PROVIDE QUANTITY OF LOCKOUT RELAY CONTACTS AS REQUIRED BY P&IDS.
7. PUMP PROTECTION RELAY PROVIDED BY PUMP SUPPLIER INSTALLED BY MCC SUPPLIER WHEN SHOWN ON P&ID'S.

Revision	By	Appd	YYYY.MM.DD
BID SET	MGB	JP	2022.09.01
Issued	By	Appd	YYYY.MM.DD

Permit/Seal

REGISTERED PROFESSIONAL ENGINEER — JEREMY J. POLLET — NO.017557 — Exp.6-30-2023 — ELECTRICAL — STATE OF CALIFORNIA

Consultant

ControlPoint Engineering, Inc.
3941 Park Drive, Unit 20
El Dorado Hills, CA 95762

T 916.817.1376
F 916.760.1378

Stantec

Stantec Consulting Services Inc.
3875 Atherton Road
Rocklin CA 95765-3716
Tel: (916) 773-8100
www.stantec.com

Copyright Reserved
The Contractor shall verify and be responsible for all dimensions. DO NOT scale the drawing - any errors or omissions shall be reported to Stantec without delay. The Copyrights to all designs and drawings are the property of Stantec. Reproduction or use for any purpose other than that authorized by Stantec is forbidden.

Client/Project Logo

Client/Project
City of San Juan Bautista
SANITARY SEWER FORCE MAIN
San Juan Bautista, California

File Name: SANJ21-001-E006 | KB Dwn. | MSB Dsgn. | JP Chkd. | 2022.04.01 YYYY.MM.DD

Title
VFD ELEMENTARY DIAGRAM (CONTROLLED FROM MCC)

Project No. 184031441
Scale NTS
Revision
Sheet 101 of 128
Drawing No. E006

ORIGINAL SHEET - ANSI D
C:\projects\sanj21-001\cad\sanj21-001-e006.dwg 2022.08.17 2:43:10 PM

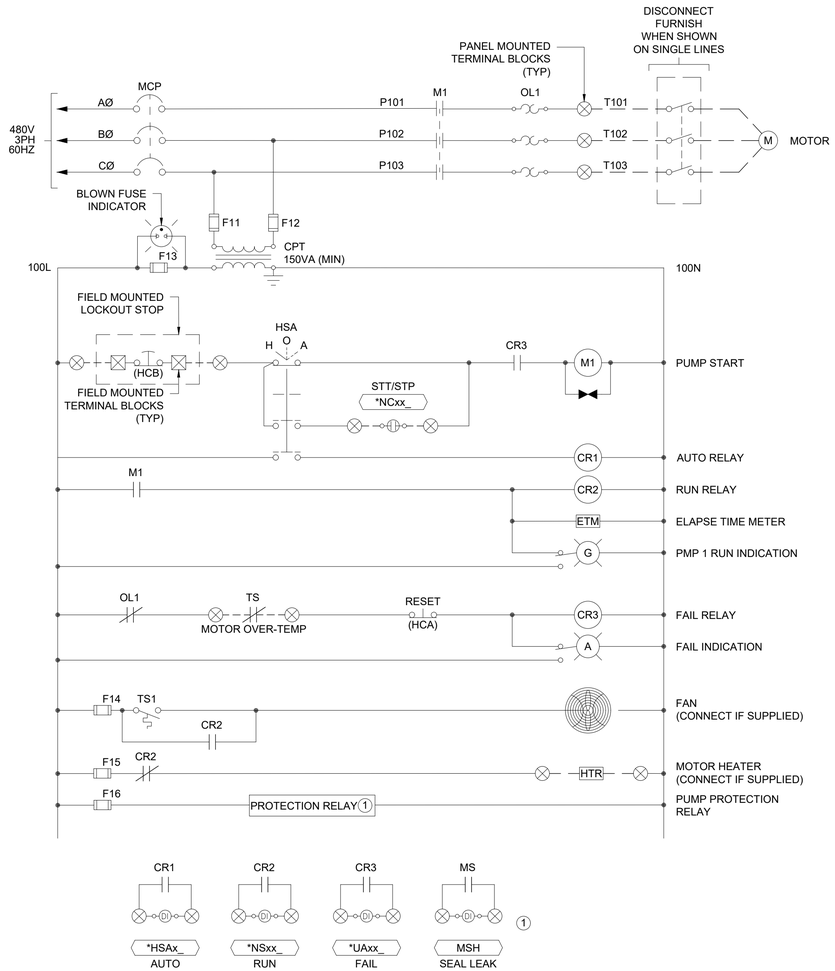

DETAIL 1 - FVNR MOTOR CONTROL DIAGRAM (CONTROLLED FROM MCC)
SCALE: NONE

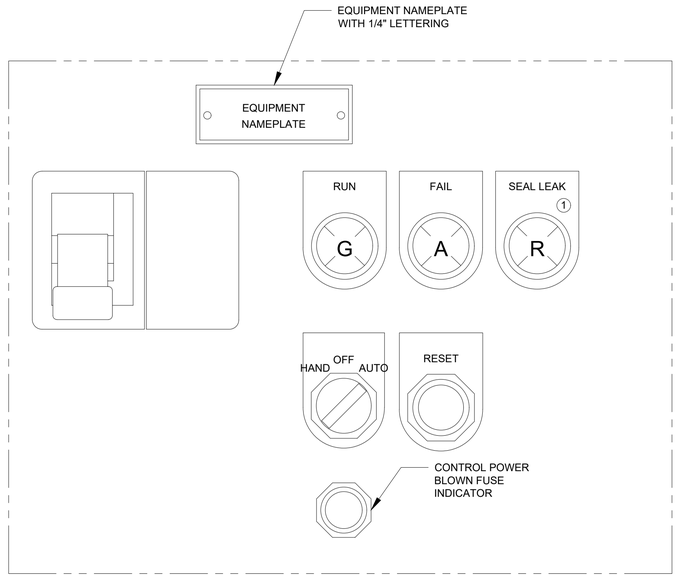

DETAIL 2 - MCC CUBICAL ELEVATION
SCALE: NONE

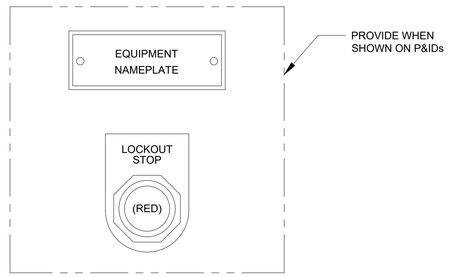

DETAIL 3 - FIELD CONTROL STATION ELEVATION
SCALE: NONE

GENERAL NOTES

A. THESE DRAWINGS SHOW GENERAL CONTROL PHILOSOPHY AND DEVICES. NOT ALL REQUIRED CONTROL COMPONENTS AND DEVICES ARE SHOWN. CONTRACTOR IS RESPONSIBLE TO PROVIDE COMPLETE AND FUNCTIONAL SYSTEM.

SHEET NOTES

1. PUMP PROTECTION RELAY PROVIDED BY PUMP SUPPLIER INSTALLED BY MCC SUPPLIER WHEN SHOWN ON P&ID'S.

Revision	By	Appd	YYYY.MM.DD

BID SET / Issued	MGB By	JP Appd	2022.09.01 YYYY.MM.DD

Permit/Seal

REGISTERED PROFESSIONAL ENGINEER — JEREMY J. POLLET — NO.017557 — Exp.6-30-2023 — ELECTRICAL — STATE OF CALIFORNIA

Consultant

ControlPoint Engineering, Inc.
3941 Park Drive, Unit 20
El Dorado Hills, CA 95762

T 916.817.1376
F 916.760.1378

Stantec

Stantec Consulting Services Inc.
3875 Atherton Road
Rocklin CA 95765-3716
Tel: (916) 773-8100
www.stantec.com

Copyright Reserved

The Contractor shall verify and be responsible for all dimensions. DO NOT scale the drawing - any errors or omissions shall be reported to Stantec without delay. The Copyrights to all designs and drawings are the property of Stantec. Reproduction or use for any purpose other than that authorized by Stantec is forbidden.

Client/Project Logo

Client/Project

City of San Juan Bautista

SANITARY SEWER FORCE MAIN

San Juan Bautista, California

File Name: SANJ21-001-E007 — KB Dwn. — MSB Dsgn. — JP Chkd. — 2022.04.01 YYYY.MM.DD

Title

FVNR DIAGRAM (CONTROLLED FROM MCC)

Project No. 184031441 — Scale NTS

Revision — Sheet 102 of 128 — Drawing No. E007

ORIGINAL SHEET - ANSI D

C:\Users\chris.vaz\DOT-001 san juan baps\dwt\vaz\P21-001-e007 2022.08.17 4:43 PM

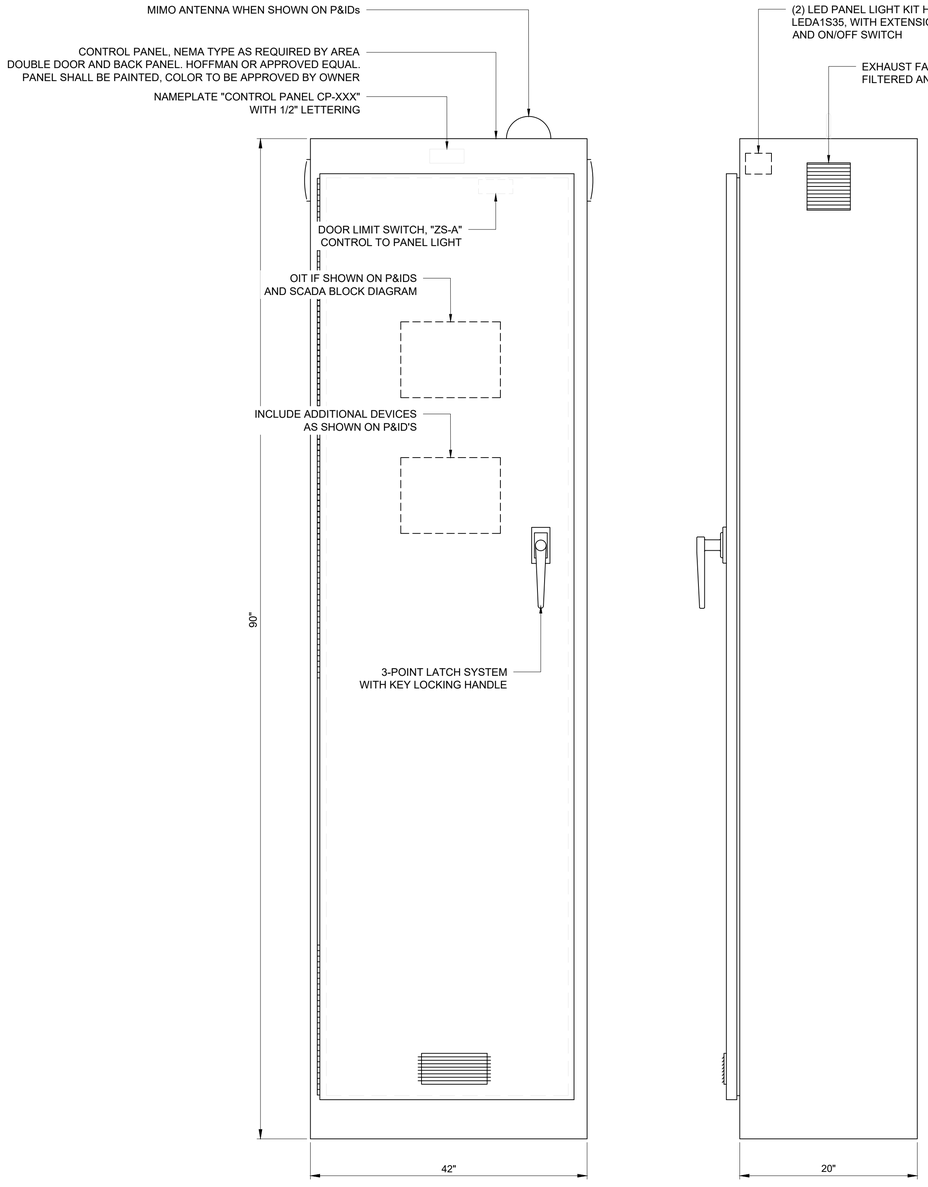

DETAIL A - CONTROL PANEL ELEVATION
SCALE: NONE

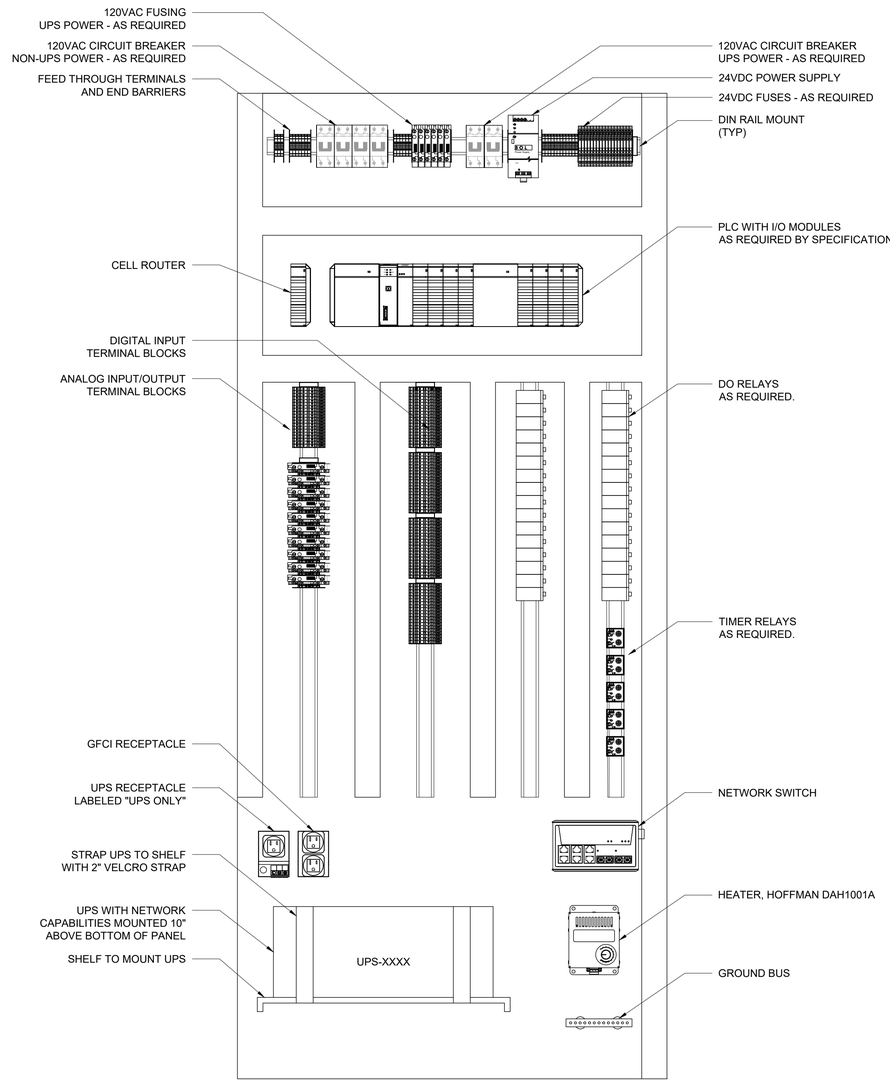

DETAIL B - BACK PANEL ELEVATION
SCALE: NONE

GENERAL NOTES

A. ALL DEVICES MOUNTED ON CONTROL PANEL PANEL AND BACK PANEL SHALL HAVE NAME PLATES.

B. THIS DRAWING REPRESENTS A TYPICAL PANEL SIZE AND A GENERAL LAYOUT OF COMPONENTS AND DEVICES. THE ACTUAL ARRANGEMENT OF COMPONENTS AND DEVICES IS THE RESPONSIBILITY OF THE CONTRACTOR THE ALLOWABLE SIZE FOR THE PANEL IS SHOWN ON THE "E" SERIES DRAWINGS.

C. CONTROL PANEL NEMA RATING PER ELECTRICAL DRAWING REQUIREMENTS.

SHEET NOTES

1. WIRE ALL I/O FROM PLC TO TERMINAL BLOCKS.
2. PROVIDE 6" OF EXTRA DIN RAIL ON EACH DIN RAIL FOR FUTURE TERMINAL BLOCKS AND RELAYS.

Revision	By	Appd	YYYY.MM.DD

Issued	By	Appd	YYYY.MM.DD
BID SET	MGB	JP	2022.09.01

Permit/Seal

REGISTERED PROFESSIONAL ENGINEER
JEREMY J. POLLETT
NO.017557
Exp.6-30-2023
ELECTRICAL
STATE OF CALIFORNIA

Consultant

ControlPoint Engineering, Inc.
3941 Park Drive, Unit 20
El Dorado Hills, CA 95762

T 916.817.1376
F 916.760.1378

Stantec

Stantec Consulting Services Inc.
3875 Atherton Road
Rocklin CA 95765-3716
Tel:(916) 773-8100
www.stantec.com

Copyright Reserved

The Contractor shall verify and be responsible for all dimensions. DO NOT scale the drawing - any errors or omissions shall be reported to Stantec without delay. The Copyrights to all designs and drawings are the property of Stantec. Reproduction or use for any purpose other than that authorized by Stantec is forbidden.

Client/Project Logo

Client/Project

City of San Juan Bautista

SANITARY SEWER FORCE MAIN

San Juan Bautista, California

File Name: SANJ21-001-E008	KB	MSB	JP	2022.04.01
	Dwn.	Dsgn.	Chkd.	YYYY.MM.DD

Title

TYPICAL CONTROL PANEL ELEVATION

Project No. 184031441

Scale NTS

Revision

Sheet 103 of 128

Drawing No. E008

ORIGINAL SHEET - ANSI D

c:\projects\sanj21-001 san juan bap\act\sanj21-001-e008
2022.08.31 7:43:26 PM

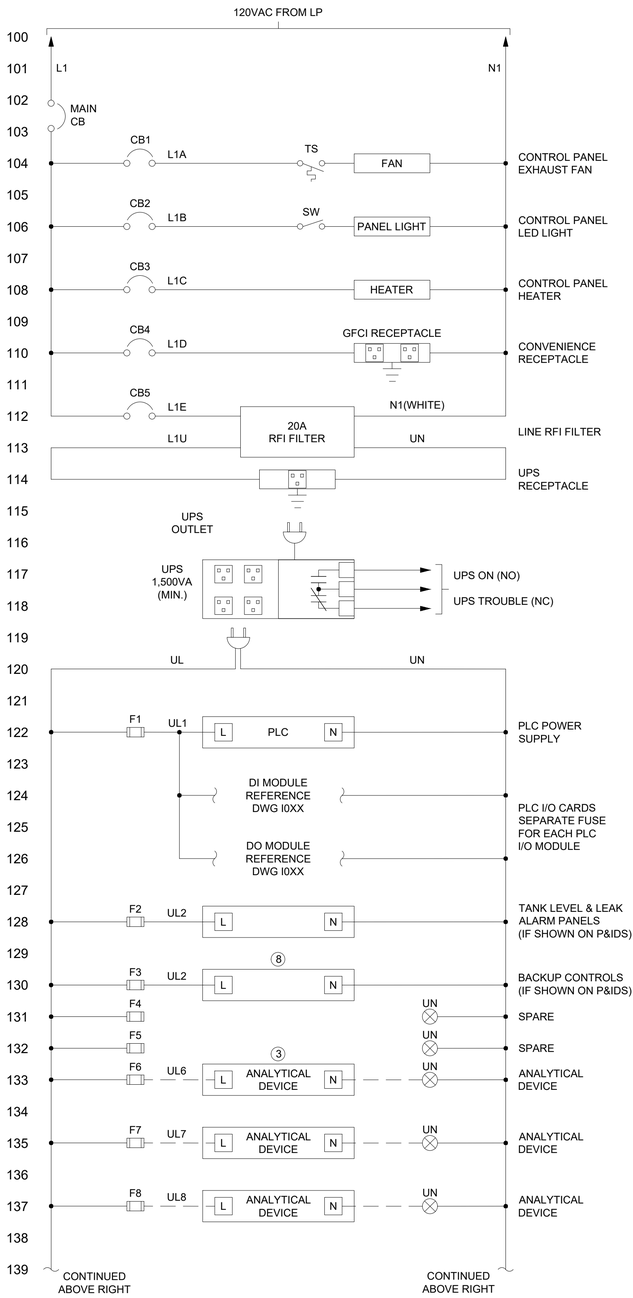

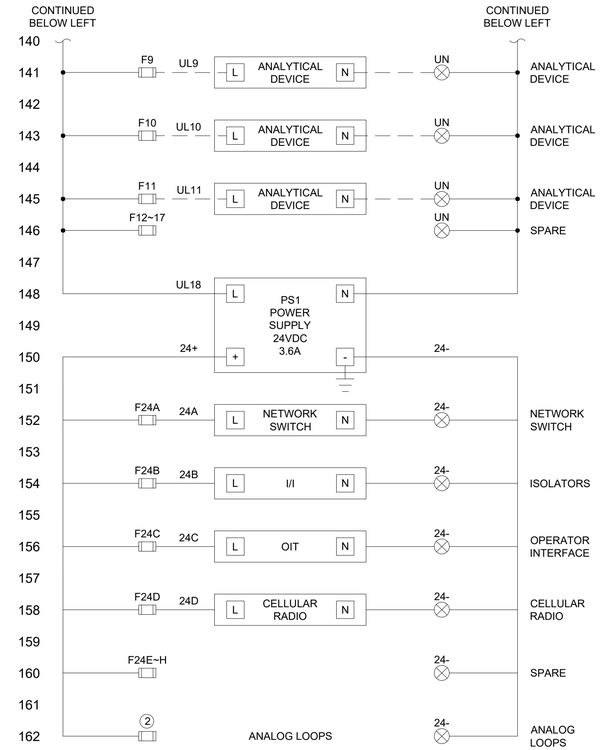

DETAIL 1 - TYPICAL CONTROL PANEL ELEMENTARY DIAGRAM

SCALE: NONE

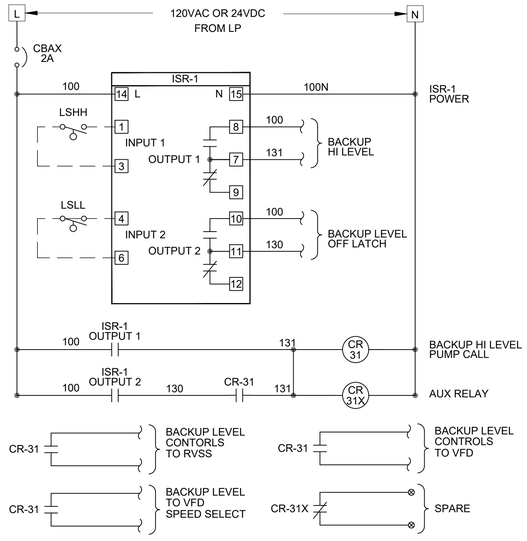

DETAIL 2 - TYPICAL BACKUP CONTROLS ELEMENTARY DIAGRAM

SCALE: NONE

GENERAL NOTES

A. THESE DRAWINGS SHOW GENERAL CONTROL PHILOSOPHY AND DEVICES. NOT ALL REQUIRED CONTROL COMPONENTS AND DEVICES ARE SHOWN. CONTRACTOR IS RESPONSIBLE TO PROVIDE COMPLETE AND FUNCTIONAL SYSTEM.

SHEET NOTES

1. ADD EXTERNAL RELAYS IF REQUIRED FOR 120VAC INTERFACE.
2. FUSES LABELED PER PLC MODULE I/O WIRING DIAGRAMS.
3. PROVIDE AS MANY TRANSMITTER AND ANALYZER FUSES AS NEEDED FOR PROJECT PLUS 5 SPARES.
4. INSTALL RACK TO LEAVE SPACE FOR FUTURE EXPANSION.
5. PROVIDE PRE-WIRED FUSED ANALOG INPUT AND OUTPUT MODULES AND FUSED RELAY MODULE FOR DISCRETE OUTPUTS.
6. PROVIDE AS MANY MODULES OF EACH TYPE TO ACCOMMODATE PROJECT I/O PLUS 25% OF SPARE I/O OF EACH TYPE.
7. LINE UP MODULES OF EACH TYPE NEXT TO EACH OTHER.
8. PROVIDE AS MANY BACKUP CONTROL CIRCUITS AND FUSES AS REQUIRED AND SHOWN ON THE P&IDS.

Revision	By	Appd	YYYY.MM.DD

BID SET	MGB	JP	2022.09.01
Issued	By	Appd	YYYY.MM.DD

Permit/Seal

REGISTERED PROFESSIONAL ENGINEER
JEREMY J. POLLET
NO.017557
Exp.6-30-2023
ELECTRICAL
STATE OF CALIFORNIA

Consultant

ControlPoint Engineering, Inc.
3941 Park Drive, Unit 20
El Dorado Hills, CA 95762
T 916.817.1376
F 916.760.1378

Stantec

Stantec Consulting Services Inc.
3875 Atherton Road
Rocklin CA 95765-3716
Tel:(916) 773-8100
www.stantec.com

Copyright Reserved
The Contractor shall verify and be responsible for all dimensions. DO NOT scale the drawing - any errors or omissions shall be reported to Stantec without delay.
The Copyrights to all designs and drawings are the property of Stantec. Reproduction or use for any purpose other than that authorized by Stantec is forbidden.

Client/Project Logo

Client/Project

City of San Juan Bautista

SANITARY SEWER FORCE MAIN

San Juan Bautista, California

File Name: SANJ21-001-E009	KB	MSB	JP	2022.04.01
	Dwn.	Dsgn.	Chkd.	YYYY.MM.DD

Title

TYPICAL CONTROL PANEL ELEMENTARY DIAGRAMS

Project No.	Scale
184031441	NTS

Revision | Sheet | Drawing No.

104 of 128

E009

ORIGINAL SHEET - ANSI D

C:\projects\sanj21-001 san juan baut\out\sanj21-001-e009 2022.08.31 7:44:22 PM

GENERAL NOTES

A. THIS IS AN EXAMPLE OF A TYPICAL DIGITAL INTERFACE MODULE AND NOT AN ACTUAL REPRESENTATION FOR THIS PROJECT. REFERENCE DIV 17 (40) FOR PLC EQUIPMENT AND IO REQUIREMENTS.

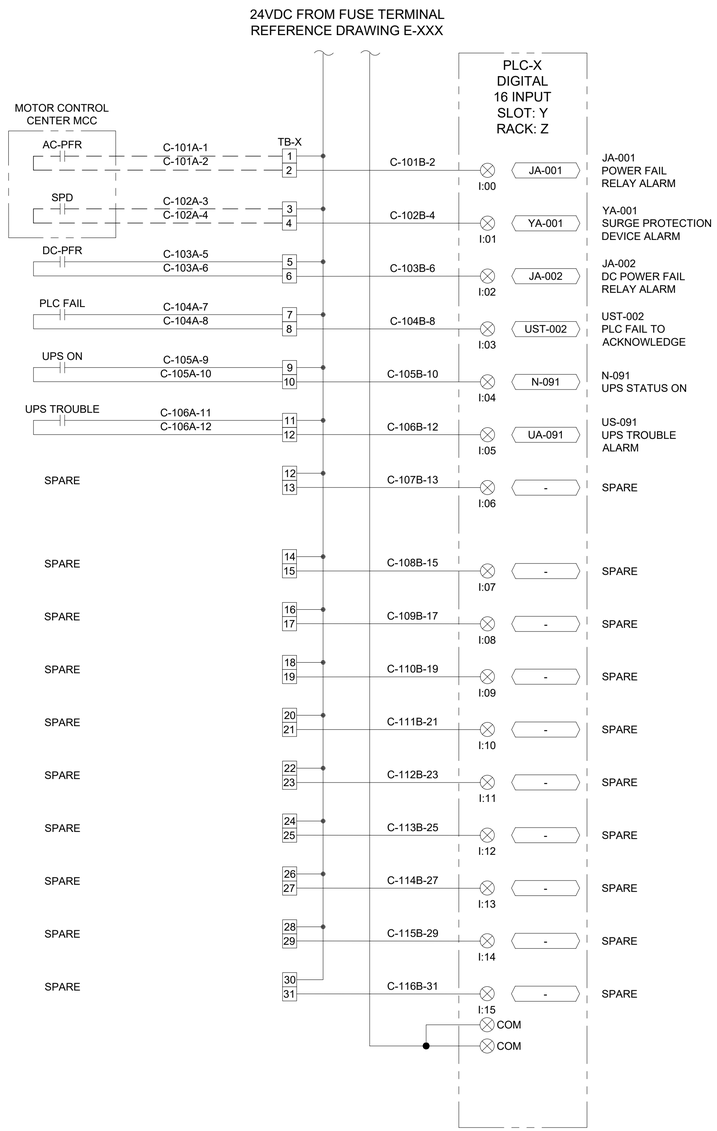

EXAMPLE DI WIRING DIAGRAM

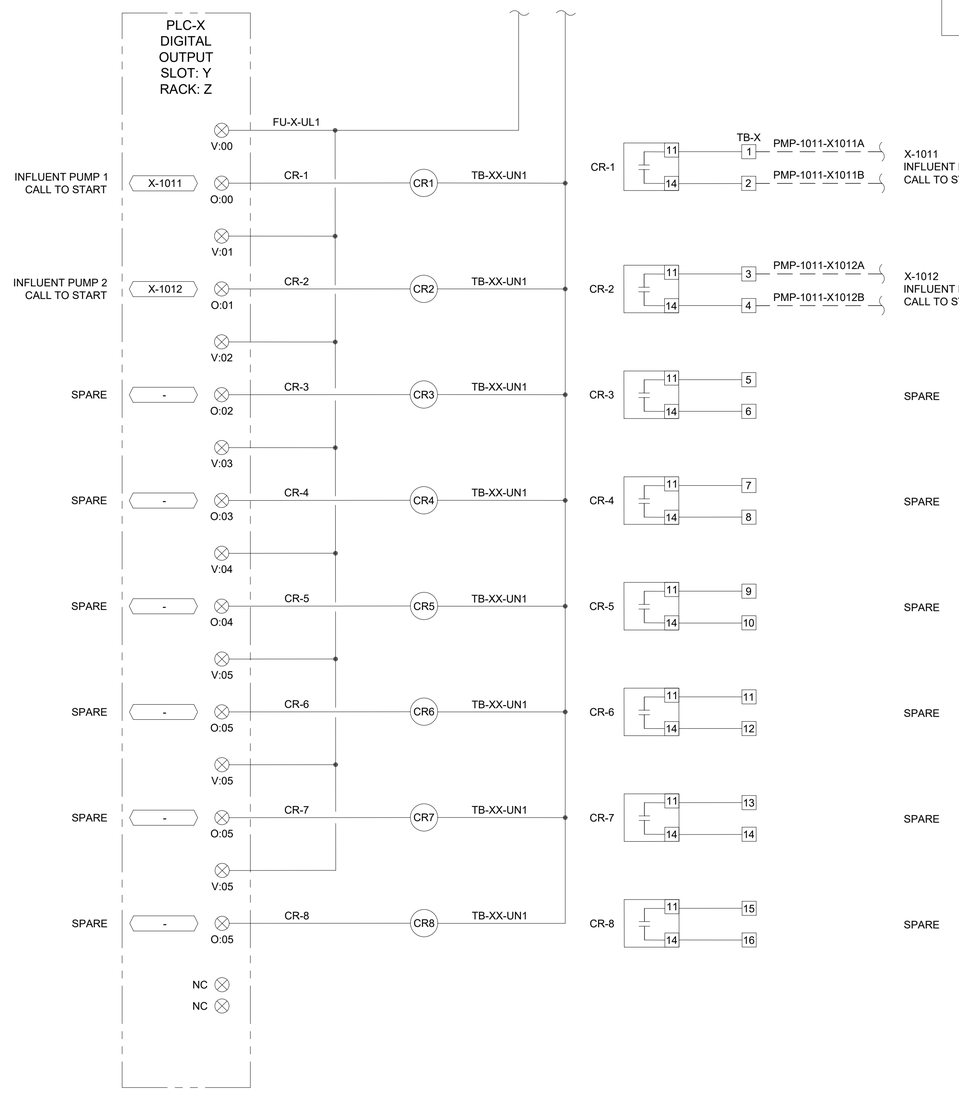

EXAMPLE DO WIRING DIAGRAM

Revision	By	Appd	YYYY.MM.DD

BID SET	MGB	JP	2022.09.01
Issued	By	Appd	YYYY.MM.DD

Permit/Seal

REGISTERED PROFESSIONAL ENGINEER
JEREMY J. POLLETT
NO.017557
Exp.6-30-2023
ELECTRICAL
STATE OF CALIFORNIA

Consultant

ControlPoint Engineering, Inc.
3941 Park Drive, Unit 20
El Dorado Hills, CA 95762

T 916.817.1376
F 916.760.1378

Stantec

Stantec Consulting Services Inc.
3875 Atherton Road
Rocklin CA 95765-3716
Tel:(916) 773-8100
www.stantec.com

Copyright Reserved

The Contractor shall verify and be responsible for all dimensions. DO NOT scale the drawing - any errors or omissions shall be reported to Stantec without delay. The Copyrights to all designs and drawings are the property of Stantec. Reproduction or use for any purpose other than that authorized by Stantec is forbidden.

Client/Project Logo

Client/Project

City of San Juan Bautista

SANITARY SEWER FORCE MAIN

San Juan Bautista, California

File Name: SANJ21-001-E010	KB	MGB	JP	2022.04.01
	Dwn.	Dsgn.	Chkd.	YYYY.MM.DD

Title

EXAMPLE PLC IO WIRING DIAGRAM 1

Project No.	Scale
184031441	NTS

Revision	Sheet	Drawing No.
	105 of 128	E010

ORIGINAL SHEET - ANSI D

c:\projects\sanj21-001 san juan bap\act\sanj21-001-e010
2022.08.31 7:42:49 PM

GENERAL NOTES

A. THIS IS AN EXAMPLE OF A TYPICAL ANALOG INTERFACE MODULE AND NOT AN ACTUAL REPRESENTATION FOR THIS PROJECT. REFERENCE DIV 17 (40) FOR PLC EQUIPMENT AND IO REQUIREMENTS.

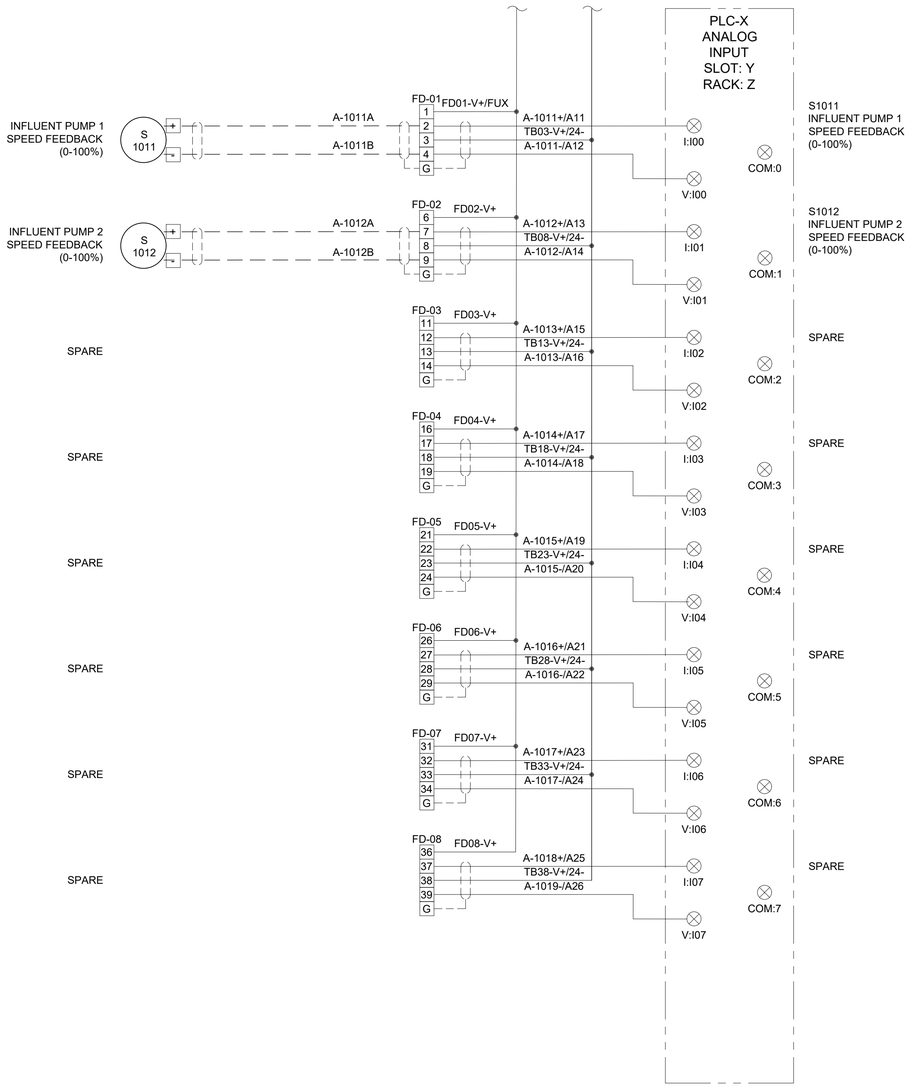

EXAMPLE AI WIRING DIAGRAM

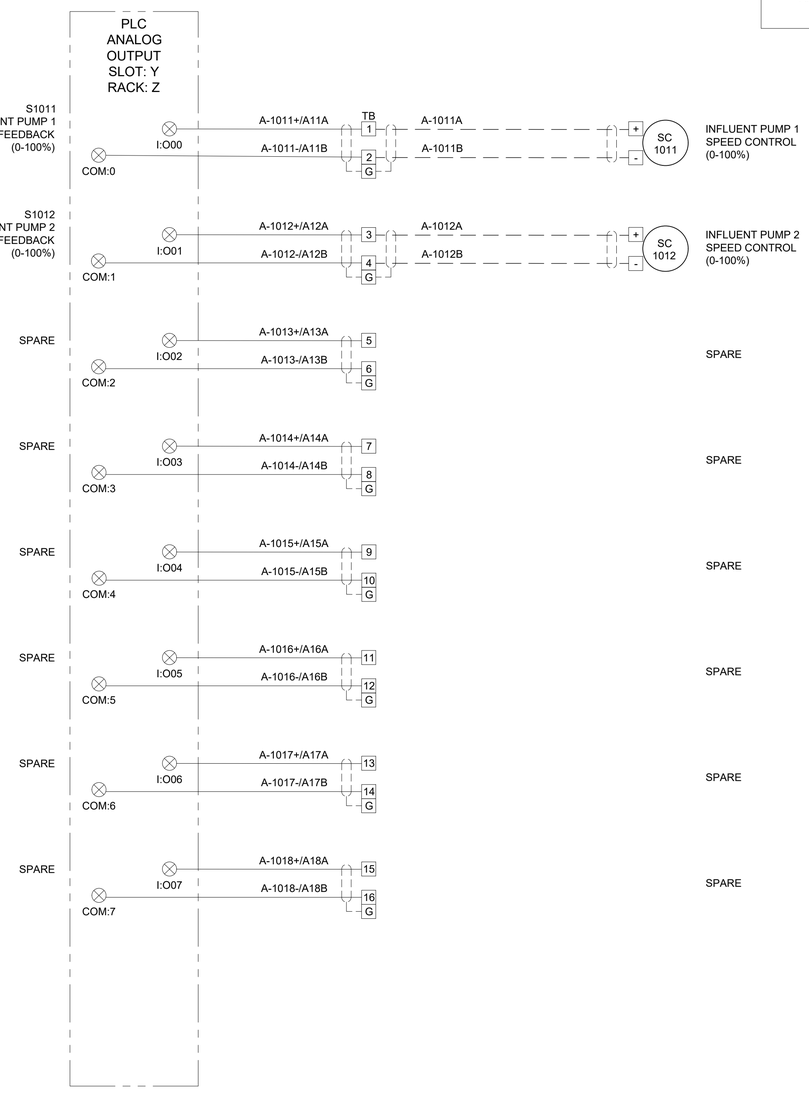

EXAMPLE AO WIRING DIAGRAM

ORIGINAL SHEET - ANSI D

c:\projects\sanj21-001\san juan baut\sch\sanj21-001-e011
2022.08.17 7:43:31 PM

Revision	By	Appd	YYYY.MM.DD
BID SET	MGB	JP	2022.09.01
Issued	By	Appd	YYYY.MM.DD

Permit/Seal

REGISTERED PROFESSIONAL ENGINEER
JEREMY J. POLLET
NO.017557
Exp.6-30-2023
ELECTRICAL
STATE OF CALIFORNIA

Consultant

ControlPoint Engineering, Inc.
3941 Park Drive, Unit 20
El Dorado Hills, CA 95762

T 916.817.1376
F 916.760.1378

Stantec

Stantec Consulting Services Inc.
3875 Atherton Road
Rocklin CA 95765-3716
Tel:(916) 773-8100
www.stantec.com

Copyright Reserved

The Contractor shall verify and be responsible for all dimensions. DO NOT scale the drawing - any errors or omissions shall be reported to Stantec without delay. The Copyrights to all designs and drawings are the property of Stantec. Reproduction or use for any purpose other than that authorized by Stantec is forbidden.

Client/Project Logo

Client/Project

City of San Juan Bautista

SANITARY SEWER FORCE MAIN

San Juan Bautista, California

File Name: SANJ21-001-E011	KB	MSB	JP	2022.04.01
	Dwn.	Dsgn.	Chkd.	YYYY.MM.DD

Title

EXAMPLE PLC IO WIRING DIAGRAM 2

Project No.	Scale
184031441	NTS

Revision | Sheet | Drawing No.

106 of 128

E011

SHEET NOTES

1. CONDUIT SIZE AND TYPE; WIRE FILL FOR CONDUITS TO BE DESIGNATED NEXT TO CONDUIT NUMBER.
2. THESE ARE THE CONTRACTORS DESIGNATED DRAWING NUMBERS.
3. NOT MORE THAN TWO WIRES PER TERMINAL BLOCKS.
4. ALL TERMINAL BLOCKS TO BE PLACED IN NUMERICAL ORDER.
5. ALL NEUTRALS SHALL BE WHITE WIRE COLOR.
6. #12GND TO DEVICE SHALL BE BONDED TO #8 GROUND LUG.

REFERENCE DOCUMENTS

DRAWING #	DESCRIPTION	MANUFACTURER
P712	P&ID DIAGRAM	DESIGN
E717	ELECTRICAL SITE PLAN	DESIGN
PAGE 32, 36	CONDUIT AND CABLE SCHEDULE	DESIGN
② 1354-11	LOOP DIAGRAM	CONTRACTOR
② 1354-68	ELEMENTARY DIAGRAM	CONTRACTOR

TYPICAL CONDUIT MARKING SYSTEM

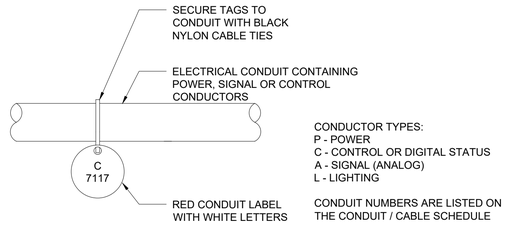

TYPICAL WIRE LABEL

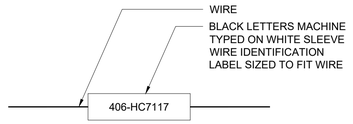

EQUIPMENT

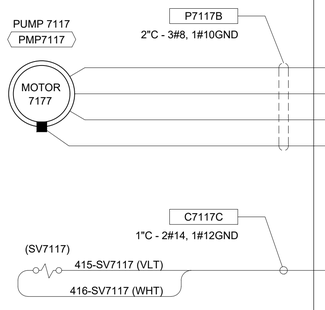

FIELD

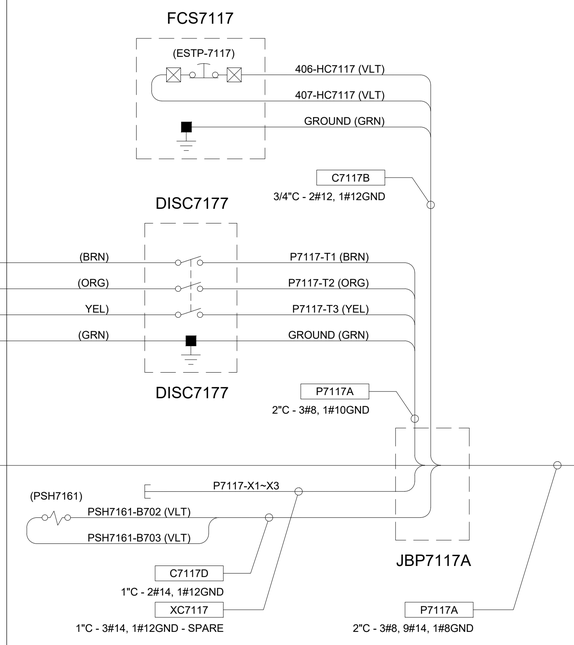

MCC100 SECTION-1 CUBICLE-A~E

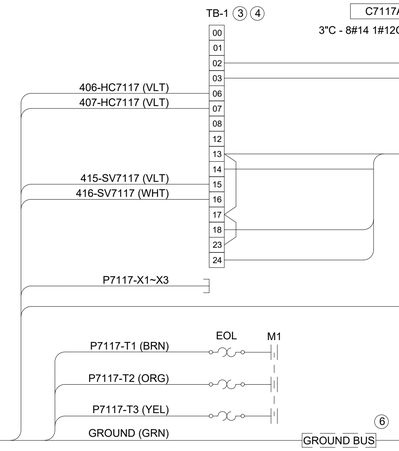

CONTROL PANEL CP100

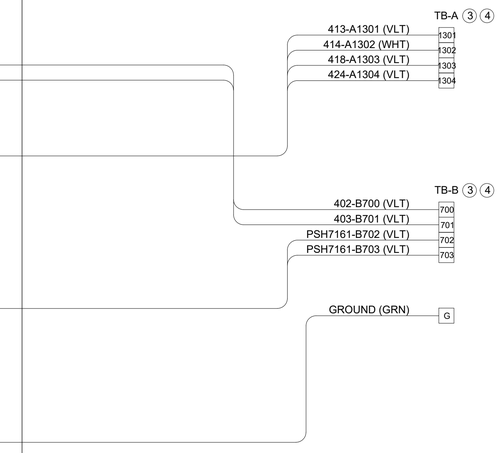

LIGHTING PANEL LP100

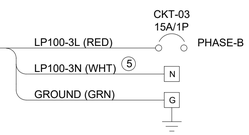

Revision	By	Appd	YYYY.MM.DD
BID SET	MGB	JP	2022.09.01
Issued	By	Appd	YYYY.MM.DD

Permit/Seal

REGISTERED PROFESSIONAL ENGINEER
JEREMY J. POLLETT
NO.017557
Exp.6-30-2023
ELECTRICAL
STATE OF CALIFORNIA

Consultant

ControlPoint Engineering, Inc.
3941 Park Drive, Unit 20
El Dorado Hills, CA 95762

T 916.817.1376
F 916.760.1378

Stantec

Stantec Consulting Services Inc.
3875 Atherton Road
Rocklin CA 95765-3716
Tel: (916) 773-8100
www.stantec.com

Copyright Reserved

The Contractor shall verify and be responsible for all dimensions. DO NOT scale the drawing - any errors or omissions shall be reported to Stantec without delay. The Copyrights to all designs and drawings are the property of Stantec. Reproduction or use for any purpose other than that authorized by Stantec is forbidden.

Client/Project Logo

Client/Project

City of San Juan Bautista

SANITARY SEWER FORCE MAIN

San Juan Bautista, California

File Name: SANJ21-001-E012	KB	MSB	JP	2022.04.01
	Dwn.	Dsgn.	Chkd.	YYYY.MM.DD

Title

EXAMPLE INTERCONNECT DIAGRAM

Project No.	Scale
184031441	NTS

Revision | Sheet: 107 of 128 | Drawing No.: E012

ORIGINAL SHEET - ANSI D

C:\projects\sanj21-001\san juan bsp\dwt\sanj21-001-e012
2022.08.31 7:42:44 PM

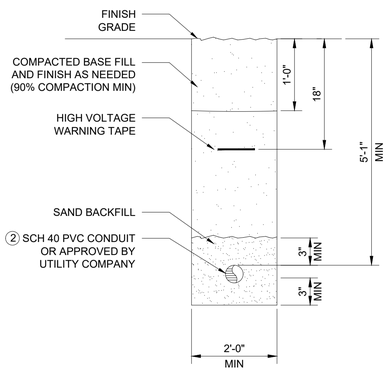

○ DETAIL NOTES

1. REFER TO UTILITY COMPANY ENGINEERED DRAWINGS.
2. REFER TO SITE PLAN AND CONDUIT AND CONDUCTOR SCHEDULE FOR QUANTITY.

PRIMARY SERVICE TRENCH DETAIL

SCALE: NONE

A TYP

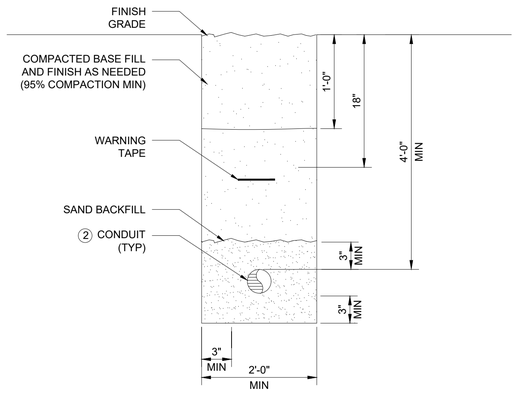

○ DETAIL NOTES

1. REFER TO UTILITY COMPANY ENGINEERED DRAWINGS.
2. REFER TO SITE PLAN AND CONDUIT AND CONDUCTOR SCHEDULE FOR QUANTITY.

SECONDARY SERVICE TRENCH DETAIL

SCALE: NONE

B TYP

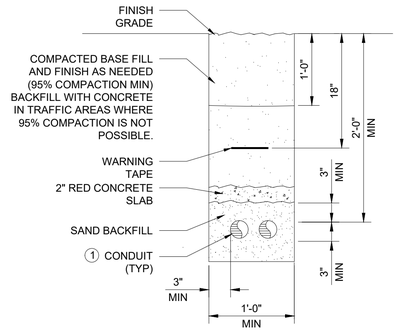

○ DETAIL NOTES

1. PROVIDE 3" MIN. SEPARATION BETWEEN CONDUIT TO CONDUIT EDGE FOR BOTH HORIZONTAL AND VERTICALLY STAGGERED CONDUITS.

CONDUIT TRENCH DETAIL

SCALE: NONE

C TYP

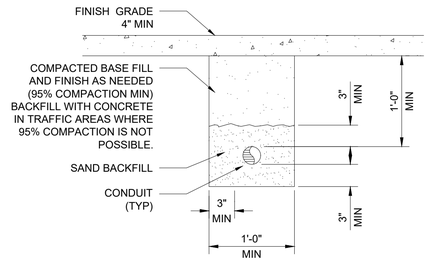

UNDER SLAB CONDUIT TRENCH DETAIL

SCALE: NONE

D TYP

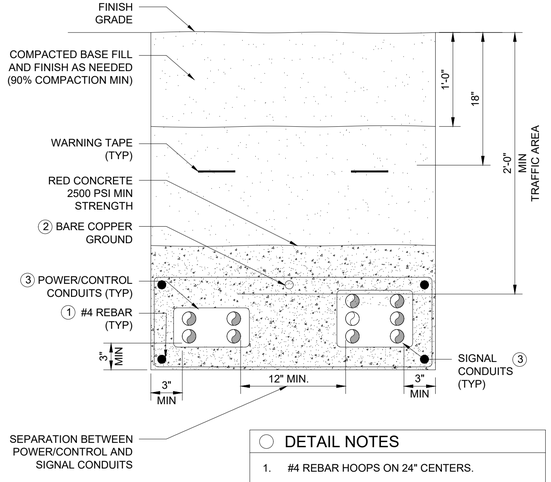

○ DETAIL NOTES

1. #4 REBAR HOOPS ON 24" CENTERS.
2. DUCT BANK GROUND SHALL BE CARRIED TO REMOTE SITES AND TIED BACK TO MAIN GROUND LOOP AND GROUND ROD AT PULLBOX/VAULT. GROUND WIRE SIZE SHALL BE MIN #2/0.
3. REFER TO SITE PLAN AND CONDUIT AND CONDUCTOR SCHEDULE FOR QUANTITY.

TYPICAL DUCT BANK INSTALLATION DETAIL

SCALE: NONE

E TYP

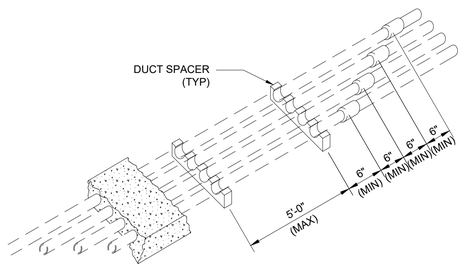

TYPICAL DUCT BANK JOINT SUPPORTS AND SPACERS

SCALE: NONE

F TYP

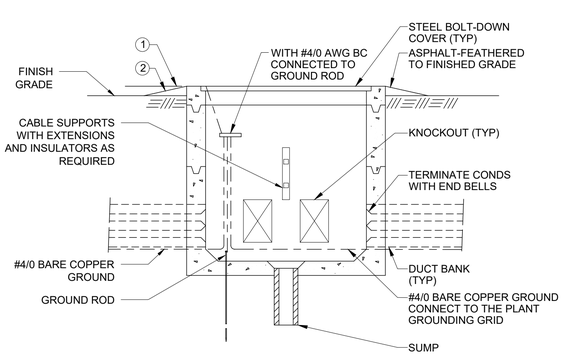

○ DETAIL NOTES

1. ELEVATION AT PAVED AREAS.
2. ELEVATION AT UNPAVED AREAS.
3. PULL BOX INSTALLATION TO BE WATERTIGHT AFTER CONDUITS HAVE BEEN INSTALLED BY USING DUCT SEALING.
4. FOR PULL BOX NOT SHOWN WITH DRAINAGE PIPING ON CIVIL DRAWINGS, PROVIDE A MINIMUM 4" DIAMETER PVC PIPE TO A 3'x3'x3' DRAIN ROCK PIT.

TYPICAL VAULT DETAIL

SCALE: NONE

G TYP

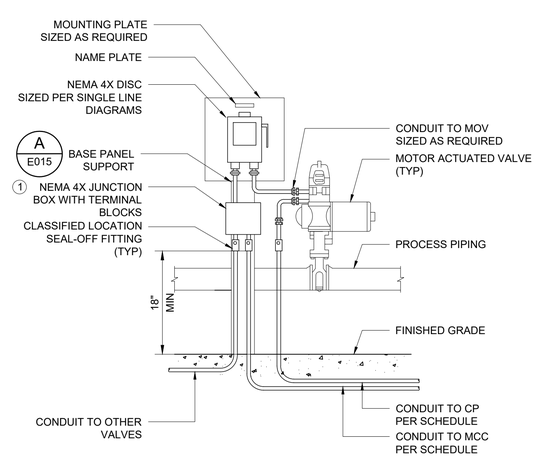

○ SHEET NOTES

1. PROVIDE TERMINAL BLOCKS RATED FOR EQUIPMENT REQUIREMENTS.

CONTROL VALVE INSTALLATION

SCALE: NONE

H TYP

Revision	By	Appd	YYYY.MM.DD

Issued	By	Appd	YYYY.MM.DD
BID SET	MGB	JP	2022.09.01

Permit/Seal

REGISTERED PROFESSIONAL ENGINEER
JEREMY J. POLLET
NO. 017557
Exp. 6-30-2023
ELECTRICAL
STATE OF CALIFORNIA

Consultant

ControlPoint Engineering, Inc.
3941 Park Drive, Unit 20
El Dorado Hills, CA 95762

T 916.817.1376
F 916.760.1378

Stantec

Stantec Consulting Services Inc.
3875 Atherton Road
Rocklin CA 95765-3716
Tel:(916) 773-8100
www.stantec.com

Copyright Reserved
The Contractor shall verify and be responsible for all dimensions. DO NOT scale the drawing - any errors or omissions shall be reported to Stantec without delay. The Copyrights to all designs and drawings are the property of Stantec. Reproduction or use for any purpose other than that authorized by Stantec is forbidden.

Client/Project Logo

Client/Project

City of San Juan Bautista

SANITARY SEWER FORCE MAIN

San Juan Bautista, California

File Name: SANJ21-001-E013 | KB Dwn. | MSB Dsgn. | JP Chkd. | 2022.04.01 YYYY.MM.DD

Title

TYPICAL ELECTRICAL DETAILS 1

Project No. 184031441 | Scale NTS

Revision | Sheet 108 of 128 | Drawing No. E013

ORIGINAL SHEET - ANSI D

C:\projects\sanj21-001 san juan baut\civil\sanj21-001-e013 2022.09.01 7:42:54 PM

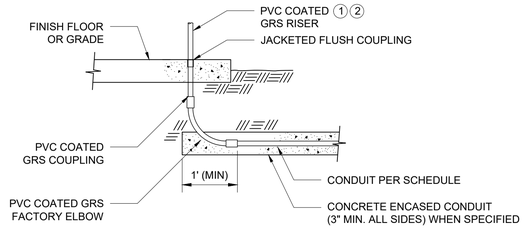

DETAIL NOTES

1. COORDINATE COUPLING LOCATION TO MATCH LOCATION OF FUTURE EQUIPMENT WHERE REQUIRED.
2. PROVIDE CONDUIT CAP AND PLUG FOR FUTURE EQUIPMENT CONDUIT INSTALLATIONS.

RISER FROM NON-METALLIC DUCT

SCALE: NONE

A / TYP

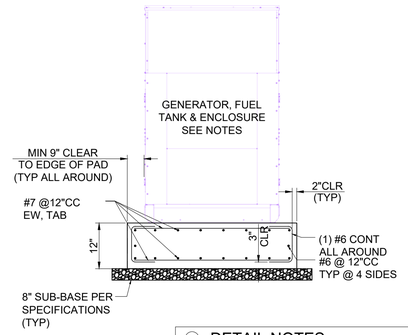

DETAIL NOTES

1. PAD SHOWN IS FOR BIDDING PURPOSES ONLY. CONTRACTOR SHALL SUBMIT FOR APPROVAL, PAD DESIGN BASED ON THE REQUIREMENTS OF THE APPROVED GENERATOR.
2. REFERENCE E002 FOR GENERAL ELECTRICAL NOTES FOR EQUIPMENT PAD DESIGN REQUIREMENT.

GENERATOR PAD DETAIL

SCALE: NONE

B / TYP

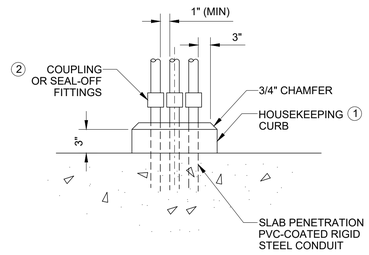

DETAIL NOTES

1. HOUSEKEEPING CURB REQUIRED AT ALL LOCATIONS FOR SINGLE AND MULTIPLE RISERS.
2. FURNISH AND INSTALL SEAL-OFF FITTING AS REQUIRED WHEN EXITING/ENTERING HAZARDOUS LOCATION.

CONCRETE HOUSEKEEPING CURB

SCALE: NONE

C / TYP

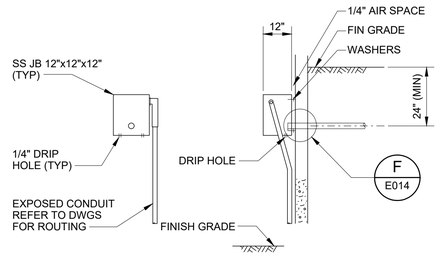

FRONT SIDE

CONDUIT ENTRANCE BELOW GRADE

SCALE: NONE

D / TYP

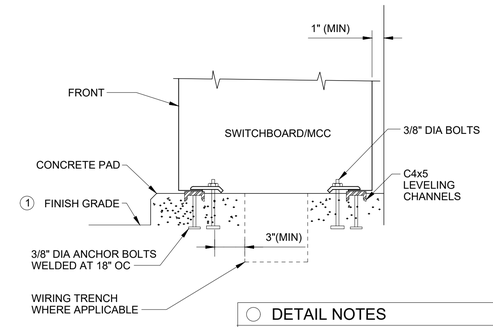

DETAIL NOTES

1. REFERENCE E002 FOR GENERAL ELECTRICAL NOTES FOR EQUIPMENT PAD DESIGN REQUIREMENT.

SWITCHBOARD/MCC MOUNTING

SCALE: NONE

E / TYP

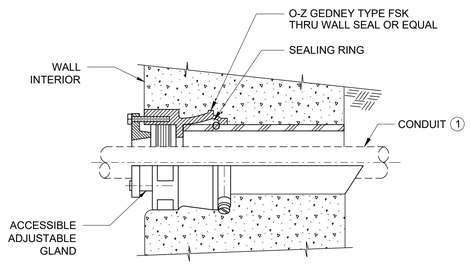

DETAIL NOTES

1. USE WATERTIGHT CONDUIT SEAL WHERE CONDUIT PENETRATIONS OF EXTERIOR WALLS ARE BELOW GRADE.

WATERTIGHT CONDUIT SEAL BELOW GRADE EXTERIOR WALLS

SCALE: NONE

F / TYP

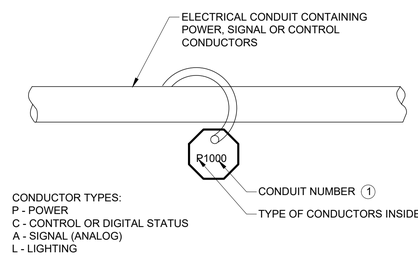

CONDUCTOR TYPES:
P - POWER
C - CONTROL OR DIGITAL STATUS
A - SIGNAL (ANALOG)
L - LIGHTING

CONDUIT NUMBERS ARE LISTED ON THE CONDUIT / CABLE SCHEDULE

DETAIL NOTES

1. CONDUIT TAGS SHALL BE AFFIXED TO CONDUITS:

   AFTER ALL WORKING DRAWINGS ARE APPROVED AND ALL FIELD MODIFICATIONS HAVE BEEN MADE.

   BEFORE FINAL ACCEPTANCE TESTING HAS STARED.

CONDUIT IDENTIFICATION TAG

SCALE: NONE

G / TYP

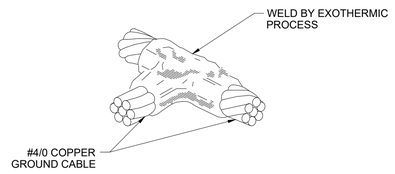

GROUND CONNECTION DETAIL

SCALE: NONE

H / TYP

Revision	By	Appd	YYYY.MM.DD
BID SET	MGB	JP	2022.09.01
Issued	By	Appd	YYYY.MM.DD

Permit/Seal

REGISTERED PROFESSIONAL ENGINEER
JEREMY J. POLLET
NO.017557
Exp.6-30-2023
ELECTRICAL
STATE OF CALIFORNIA

Consultant

ControlPoint Engineering, Inc.
3941 Park Drive, Unit 20
El Dorado Hills, CA 95762

T 916.817.1376
F 916.760.1378

Stantec

Stantec Consulting Services Inc.
3875 Atherton Road
Rocklin CA 95765-3716
Tel:(916) 773-8100
www.stantec.com

Copyright Reserved

The Contractor shall verify and be responsible for all dimensions. DO NOT scale the drawing - any errors or omissions shall be reported to Stantec without delay. The Copyrights to all designs and drawings are the property of Stantec. Reproduction or use for any purpose other than that authorized by Stantec is forbidden.

Client/Project Logo

Client/Project

City of San Juan Bautista

SANITARY SEWER FORCE MAIN

San Juan Bautista, California

File Name: SANJ21-001-E014 | KB Dwn. | MSB Dsgn. | JP Chkd. | 2022.04.01 YYYY.MM.DD

Title

TYPICAL ELECTRICAL DETAILS 2

Project No. 184031441

Scale NTS

Revision

Sheet 109 of 128

Drawing No. E014

ORIGINAL SHEET - ANSI D

c:\projects\sanj21-001 san juan bsp\act\sanj21-001-e014 2022.09.01 1:44:12 PM

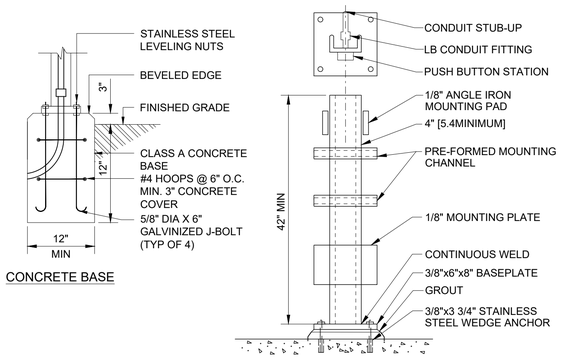

CONCRETE BASE

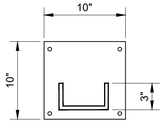

BASE PLATE

DETAIL NOTES

1. FURNISH AND INSTALL ALL ACCESSORIES REQUIRED TO PROPERLY MOUNT EQUIPMENT TO SUPPORTS.
2. PROVIDE CONCRETE BASE FOR STAND WHERE THERE IS NO CONCRETE SLAB TO ANCHOR PANEL SUPPORT.

PANEL SUPPORT DETAIL

SCALE: NONE

A TYP

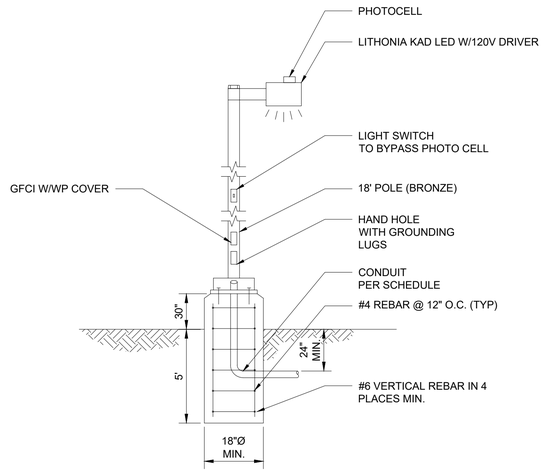

POLE MOUNTED LIGHT FIXTURE

SCALE: NONE

B TYP

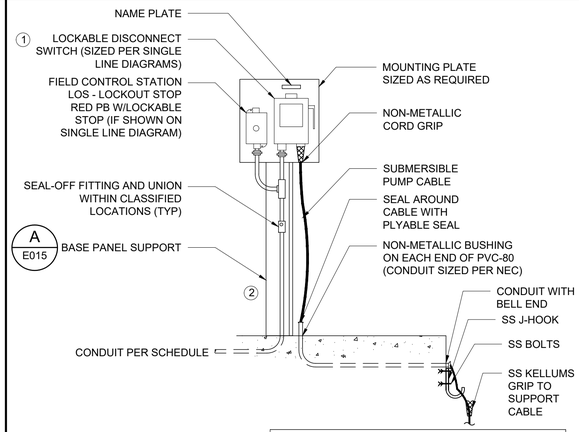

DETAIL NOTES

1. LOS AND DISCONNECT IN NEMA 4X AREAS SHALL BE STAINLESS STEEL. NEMA 12 AREA CAN BE PAINTED STEEL.
2. INSTALL CONDUIT SUPPORT UNISTRUTS AS REQUIRED.

PUMP CABLE ISOLATION DETAIL

SCALE: NONE

C TYP

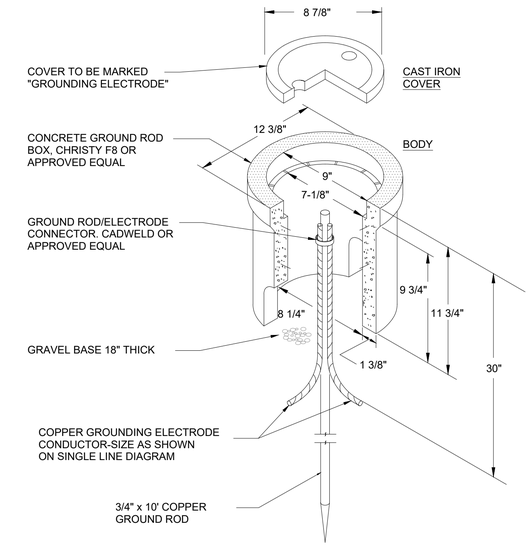

CONCRETE GROUND ROD BOX DETAIL

SCALE: NONE

D TYP

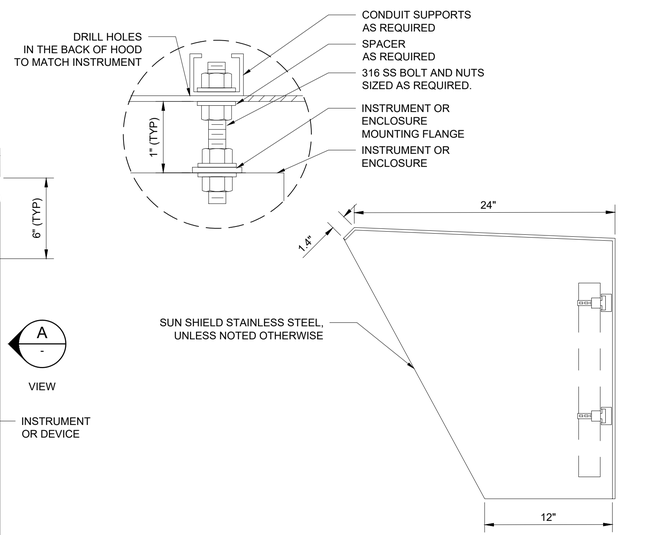

SUN SHIELD SECTION

SCALE: NONE

A -

INSTRUMENTATION WEATHER SHIELD

SCALE: NONE

E TYP

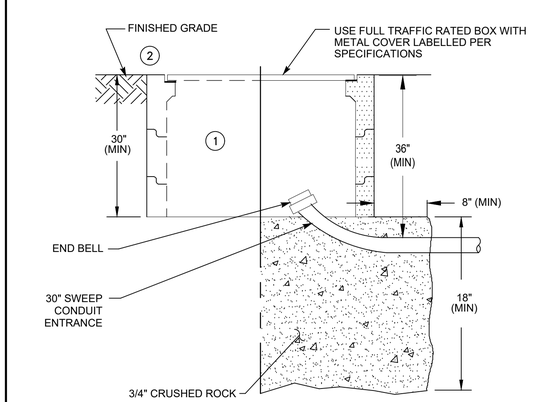

DETAIL NOTES

1. FULL TRAFFIC RATED CHRISTY B BOX OR EQUAL.
2. ADD EXTENSIONS WHERE NECESSARY TO RAISE COVER TO FINISHED GRADE.

PULL BOX DETAIL

SCALE: NONE

F TYP

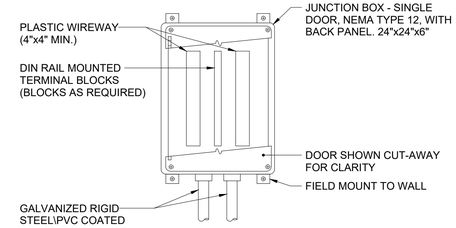

JUNCTION BOX DETAIL

SCALE: NONE

G TYP

Revision	By	Appd	YYYY.MM.DD
BID SET	MGB	JP	2022.09.01
Issued	By	Appd	YYYY.MM.DD

Permit/Seal

REGISTERED PROFESSIONAL ENGINEER — JEREMY J. POLLET — NO.017557 — Exp.6-30-2023 — ELECTRICAL — STATE OF CALIFORNIA

Consultant

ControlPoint Engineering, Inc.
3941 Park Drive, Unit 20
El Dorado Hills, CA 95762

T 916.817.1376
F 916.760.1378

Stantec

Stantec Consulting Services Inc.
3875 Atherton Road
Rocklin CA 95765-3716
Tel:(916) 773-8100
www.stantec.com

Copyright Reserved

The Contractor shall verify and be responsible for all dimensions. DO NOT scale the drawing - any errors or omissions shall be reported to Stantec without delay. The Copyrights to all designs and drawings are the property of Stantec. Reproduction or use for any purpose other than that authorized by Stantec is forbidden.

Client/Project Logo

Client/Project

City of San Juan Bautista

SANITARY SEWER FORCE MAIN

San Juan Bautista, California

File Name: SANJ21-001-E015 | KB Dwn. | MGB Dsgn. | JP Chkd. | 2022.04.01 YYYY.MM.DD

Title

TYPICAL ELECTRICAL DETAILS 3

Project No. 184031441

Scale NTS

Revision

Sheet 110 of 128

Drawing No. E015

ORIGINAL SHEET - ANSI D

C:\Projects\SJ\sanj21-001 san juan bsp\civil\dgn\sanj21-001-e015 2022.09.17 9:43:36 PM

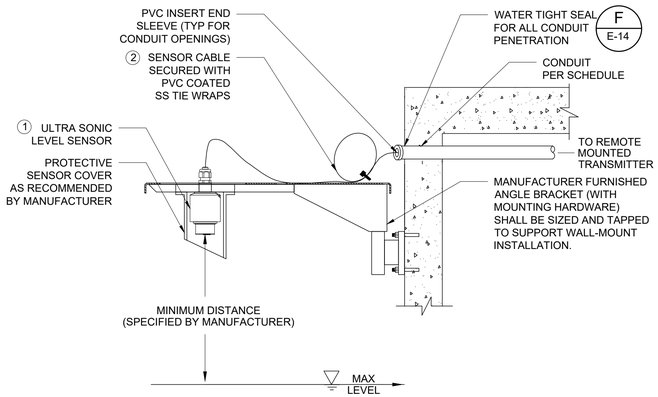

BRACKET INSTALLED - WALL MOUNT WITH REMOTE DISPLAY

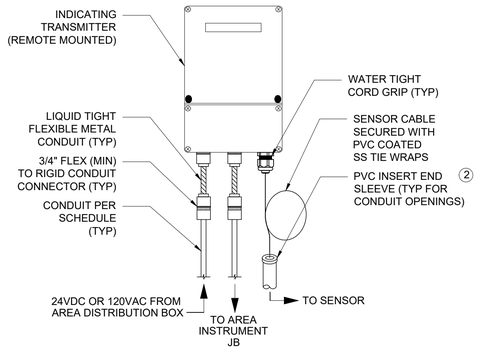

REMOTE DISPLAY / TRANSMITTER

DETAIL NOTES

1. INSTALL SENSOR SUCH THAT THE BEAM ANGLE DOES NOT INTERFERE WITH OTHER PHYSICAL EQUIPMENT OR FLOW STREAM.
2. MAINTENANCE LOOP SHALL INCLUDE 2FT LENGTH OF CABLE SECURED WITH PVC-COATED SS TIE WRAPS, BEND RADIUS NO LESS THAN 8".

ULTRA SONIC LEVEL DEVICE
WITH WALL MOUNTED REMOTE DISPLAY — A TYP

SCALE: NONE

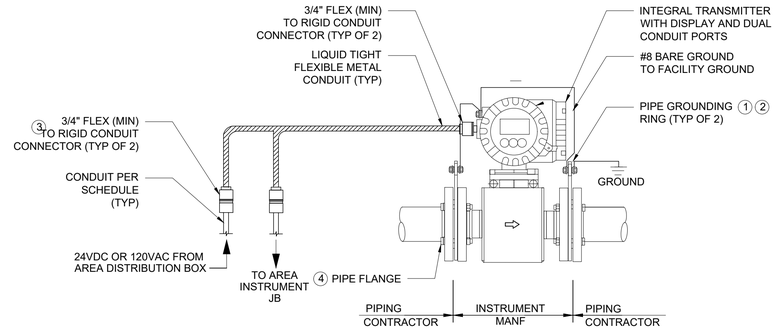

DETAIL NOTES

1. GROUND RINGS ARE REQUIRED FOR METALLIC AND NON-METALLIC PIPE INSTALLATION.
2. GROUND RING MATERIAL SHALL MATCH MEASURING ELECTRODE MATERIAL.
3. FURNISH AND INSTALL CONDUIT SUPPORTS FOR ALL CONDUITS AS REQUIRED.
4. MECHANICAL PIPE SHALL BE SIZED IN ACCORDANCE WITH MECHANICAL/CIVIL DRAWINGS.

MAGNETIC FLOW METER
WITH INTEGRAL TRANSMITTER — B TYP

SCALE: NONE

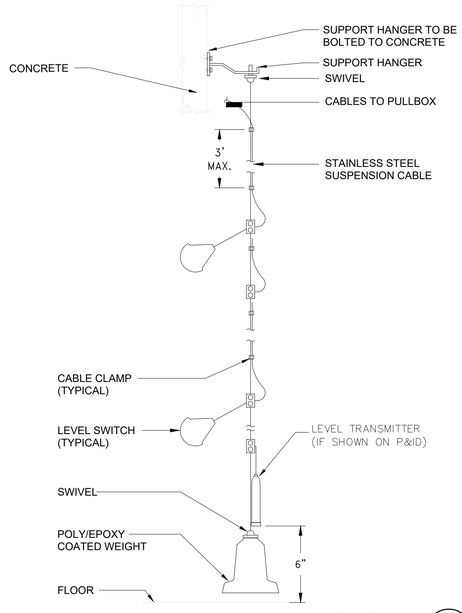

DETAIL NOTES

1. ALL HARDWARE, CLAMPS & HANGER SHALL BE STAINLESS STEEL.
2. SUPPORT HANGER SHALL BE LOCATED AT THE TOP OF THE BASIN.
3. SUPPORT HANGER SHALL SUSPEND CABLE TO PROVIDE CLEARANCE FOR PROPER LEVEL SWITCH OPERATION.
4. LEVEL SWITCHES SHALL BE POSITIONED AND ROTATED ON SUSPENSION CABLE IN ORDER THAT THE LEVEL SWITCHES DO NOT INTERFERE WITH EACH OTHER.
5. LEVEL SWITCH CLAMPS SHALL HAVE FLEX BUSHINGS TO PREVENT DAMAGE TO THE CABLE.

SUBMERSIBLE LEVEL TRANSMISSITER & FLOAT DETAIL — C TYP

SCALE: NONE

Revision	By	Appd	YYYY.MM.DD
BID SET	MGB	JP	2022.09.01
Issued	By	Appd	YYYY.MM.DD

Permit/Seal

REGISTERED PROFESSIONAL ENGINEER — JEREMY J. POLLET — NO.017557 — Exp.6-30-2023 — ELECTRICAL — STATE OF CALIFORNIA

Consultant

ControlPoint Engineering, Inc.
3941 Park Drive, Unit 20
El Dorado Hills, CA 95762

T 916.817.1376
F 916.760.1378

Stantec

Stantec Consulting Services Inc.
3875 Atherton Road
Rocklin CA 95765-3716
Tel: (916) 773-8100
www.stantec.com

Copyright Reserved
The Contractor shall verify and be responsible for all dimensions. DO NOT scale the drawing - any errors or omissions shall be reported to Stantec without delay.
The Copyrights to all designs and drawings are the property of Stantec. Reproduction or use for any purpose other than that authorized by Stantec is forbidden.

Client/Project Logo

Client/Project
City of San Juan Bautista

SANITARY SEWER FORCE MAIN

San Juan Bautista, California

File Name: SANJ21-001-E016	KB	MSB	JP	2022.04.01
	Dwn.	Dsgn.	Chkd.	YYYY.MM.DD

Title
TYPICAL ELECTRICAL DETAILS 4

Project No. 184031441
Scale NTS
Revision
Sheet 111 of 128
Drawing No. E016

ORIGINAL SHEET - ANSI D

C:\Users\kevin.kaye\DOCUMENTS\San Juan Bautista\Revit\SJB21-001-eE016 2022.08.31 7:43:15 PM

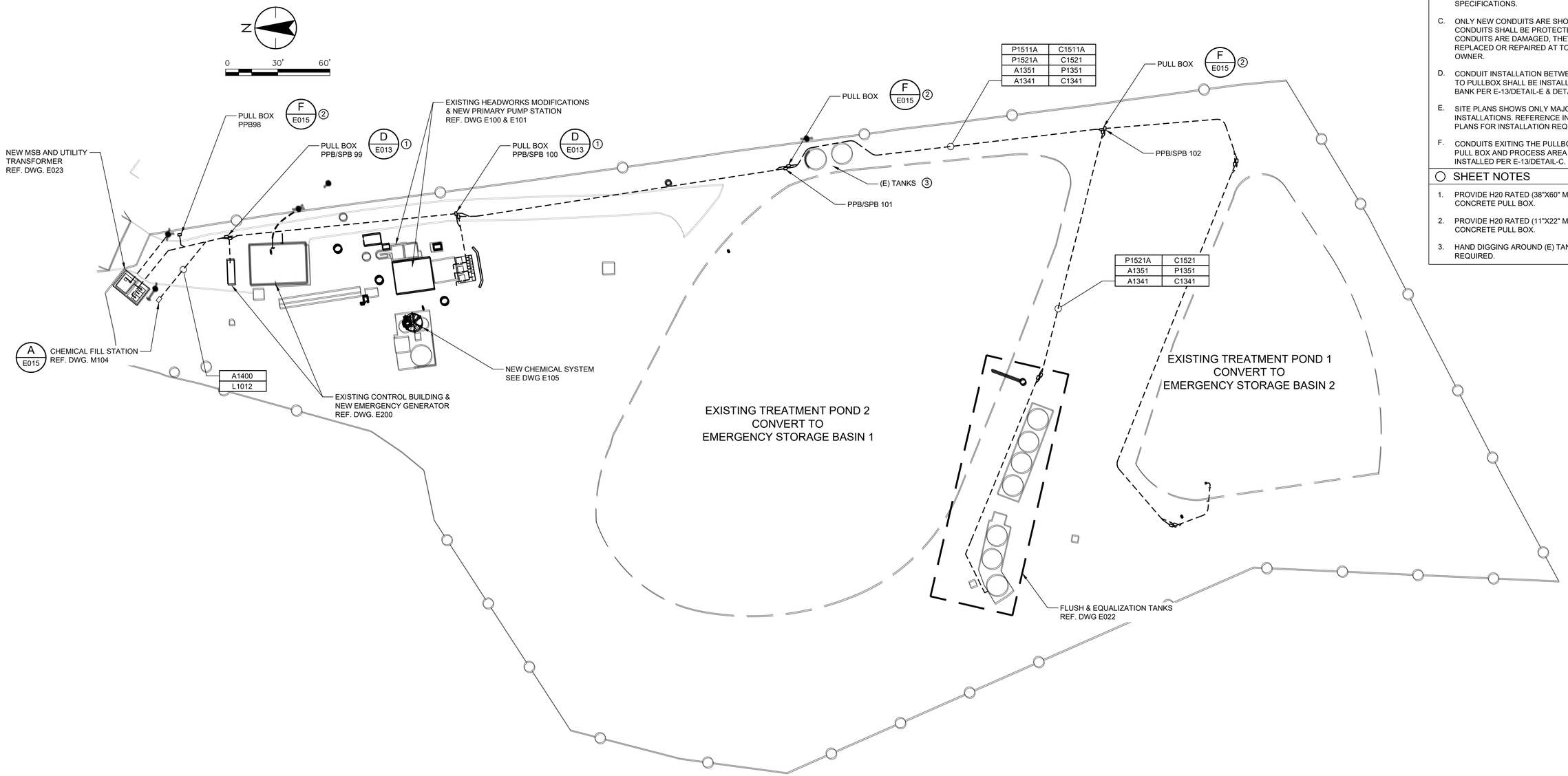

GENERAL NOTES

A. REFERENCE E002 FOR ADDITIONAL ELECTRICAL GENERAL NOTES.

B. AREA CLASSIFICATION SHALL APPLY UNLESS OTHERWISE NOTED ON THE PLANS AND SPECIFICATIONS.

C. ONLY NEW CONDUITS ARE SHOWN. EXISTING CONDUITS SHALL BE PROTECTED. IF EXISTING CONDUITS ARE DAMAGED, THEY SHALL BE REPLACED OR REPAIRED AT TO COST TO THE OWNER.

D. CONDUIT INSTALLATION BETWEEN PULLBOX TO PULLBOX SHALL BE INSTALLED IN DUCT BANK PER E-13/DETAIL-E & DETAIL-F.

E. SITE PLANS SHOWS ONLY MAJOR DUCTBANK INSTALLATIONS. REFERENCE INDIVIDUAL SITE PLANS FOR INSTALLATION REQUIREMENTS.

F. CONDUITS EXITING THE PULLBOX BETWEEN PULL BOX AND PROCESS AREA SHALL BE INSTALLED PER E-13/DETAIL-C.

SHEET NOTES

1. PROVIDE H20 RATED (38"X60" MIN.) PRE-CAST CONCRETE PULL BOX.
2. PROVIDE H20 RATED (11"X22" MIN.) PRE-CAST CONCRETE PULL BOX.
3. HAND DIGGING AROUND (E) TANKS IS REQUIRED.

Revision	By	Appd.	YYYY.MM.DD

Issued	By	Appd	YYYY.MM.DD
BID SET	MGB	JP	2022.09.01

Permit/Seal

REGISTERED PROFESSIONAL ENGINEER
JEREMY J. POLLETT
NO.017557
Exp.6-30-2023
ELECTRICAL
STATE OF CALIFORNIA

Consultant

ControlPoint Engineering, Inc.
3941 Park Drive, Unit 20
El Dorado Hills, CA 95762

T 916.817.1376
F 916.760.1378

Stantec

Stantec Consulting Services Inc.
3875 Atherton Road
Rocklin CA 95765-3716
Tel:(916) 773-8100
www.stantec.com

Copyright Reserved

The Contractor shall verify and be responsible for all dimensions. DO NOT scale the drawing - any errors or omissions shall be reported to Stantec without delay. The Copyrights to all designs and drawings are the property of Stantec. Reproduction or use for any purpose other than that authorized by Stantec is forbidden.

Client/Project Logo

Client/Project

City of San Juan Bautista

SANITARY SEWER FORCE MAIN

San Juan Bautista, California

File Name: SANJ21-001-E020	KB	MGB	JP	2022.04.01
	Dwn.	Dsgn.	Chkd.	YYYY.MM.DD

Title

OVERALL ELECTRICAL SITE PLAN

Project No. 184031441

Scale 1" = 30'

Revision

Sheet 112 of 128

Drawing No. E020

ORIGINAL SHEET - ANSI D

c:\projects\sanj21-001 san juan bap\act\sanj21-001-e020 2022.08.31 7:42:21 PM

AREA CLASSIFICATION

NEMA 3R

ALL AREAS

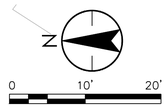

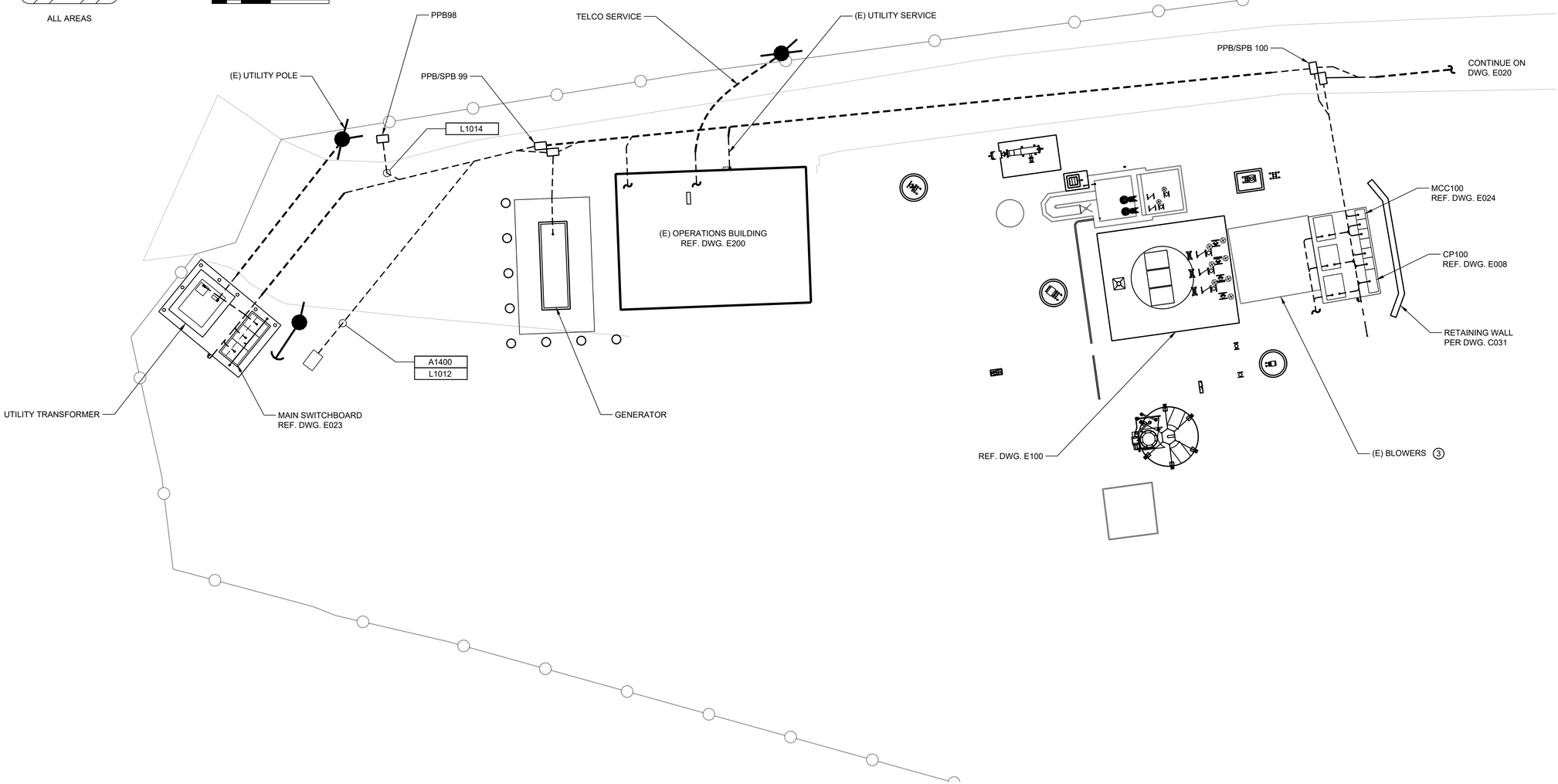

GENERAL NOTES

A. REFERENCE E002 FOR ADDITIONAL ELECTRICAL GENERAL NOTES.

B. AREA CLASSIFICATION SHALL APPLY UNLESS OTHERWISE NOTED ON THE PLANS AND SPECIFICATIONS.

C. ONLY NEW CONDUITS ARE SHOWN. EXISTING CONDUITS SHALL BE PROTECTED. IF EXISTING CONDUITS ARE DAMAGED, THEY SHALL BE REPLACED OR REPAIRED AT TO COST TO THE OWNER.

D. CONDUIT INSTALLATION BETWEEN PULLBOX TO PULLBOX SHALL BE INSTALLED IN DUCT BANK PER E-13/DETAIL-E & DETAIL-F.

E. SITE PLANS SHOWS ONLY MAJOR DUCTBANK INSTALLATIONS. REFERENCE INDIVIDUAL SITE PLANS FOR INSTALLATION REQUIREMENTS.

F. CONDUITS EXITING THE PULLBOX BETWEEN PULL BOX AND PROCESS AREA SHALL BE INSTALLED PER E-13/DETAIL-C.

○ SHEET NOTES

1. PROVIDE H20 RATED (38"X60" MIN.) PRE-CAST CONCRETE PULL BOX.
2. PROVIDE H20 RATED (11"X22" MIN.) PRE-CAST CONCRETE PULL BOX.
3. EXISTING BLOWERS TO REMAIN IN OPERATION UNTIL NEW PUMP STATION IS ON LINE.
4. NEW GENERATOR PAD TO BE DESIGNED AND INSTALLED BY CONTRACTOR. DESIGN BASED ON APPROVED GENERATOR AND SEISMIC DESIGN CRITERIA PER SPECIFICATIONS.

Revision	By	Appd.	YY.MM.DD
BID SET	MGB	JP	2022.09.01
Issued	By	Appd	YYYY.MM.DD

Permit/Seal

REGISTERED PROFESSIONAL ENGINEER — JEREMY J. POLLET — NO.017557 — Exp.6-30-2023 — ELECTRICAL — STATE OF CALIFORNIA

Consultant

ControlPoint Engineering, Inc.
3941 Park Drive, Unit 20
El Dorado Hills, CA 95762

T 916.817.1376
F 916.760.1378

Stantec

Stantec Consulting Services Inc.
3875 Atherton Road
Rocklin CA 95765-3716
Tel:(916) 773-8100
www.stantec.com

Copyright Reserved

The Contractor shall verify and be responsible for all dimensions. DO NOT scale the drawing - any errors or omissions shall be reported to Stantec without delay. The Copyrights to all designs and drawings are the property of Stantec. Reproduction or use for any purpose other than that authorized by Stantec is forbidden.

Client/Project Logo

Client/Project

City of San Juan Bautista

SANITARY SEWER FORCE MAIN

San Juan Bautista, California

File Name: SANJ21-001-E021.E023.E024	KB	MGB	JP	2022.04.01
	Dwn.	Dsgn.	Chkd.	YYYY.MM.DD

Title

CONTROL BUILDING AND HEADWORKS ELECTRICAL PLAN

Project No.	Scale
184031441	1" = 10'

Revision — Sheet 113 of 128 — Drawing No. E021

C:\Projects\sanj21-001 san juan bapt\act\sanj21-001-e021-e023.dgn
2022.08.31 7:42:40 PM
ORIGINAL SHEET - ANSI D

AREA CLASSIFICATION

NEMA 3R

ENTIRE AREA

N

0 2' 4' 6'

GENERAL NOTES

A. REFERENCE E-02 FOR ADDITIONAL ELECTRICAL GENERAL NOTES.

B. AREA CLASSIFICATION SHALL APPLY UNLESS OTHERWISE NOTED ON THE PLANS AND SPECIFICATIONS.

C. ONLY NEW CONDUITS ARE SHOWN. EXISTING CONDUITS SHALL BE PROTECTED. IF EXISTING CONDUITS ARE DAMAGED, THEY SHALL BE REPLACED OR REPAIRED AT TO COST TO THE OWNER.

SHEET NOTES

1. PROVIDE ADJUSTABLE BULKHEAD FITTING FOR LEVEL ELEMENT INSTALLATION.

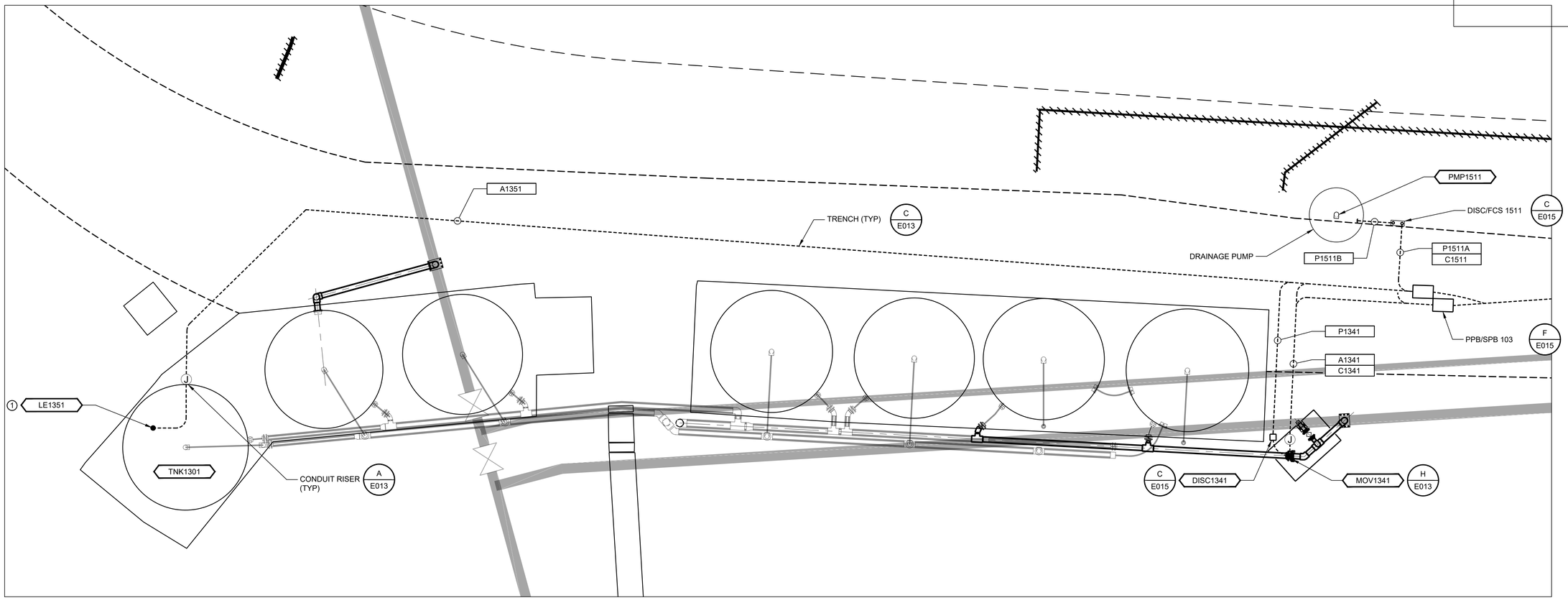

PLAN

SCALE: 3/16" = 1'-0"

Revision	By	Appd.	YYYY.MM.DD

Issued	By	Appd	YYYY.MM.DD
BID SET	MGB	JP	2022.09.01

Permit/Seal

REGISTERED PROFESSIONAL ENGINEER
JEREMY J. POLLET
NO.017557
Exp.6-30-2023
ELECTRICAL
STATE OF CALIFORNIA

Consultant

ControlPoint Engineering, Inc.
3941 Park Drive, Unit 20
El Dorado Hills, CA 95762

T 916.817.1376
F 916.760.1378

Stantec

Stantec Consulting Services Inc.
3875 Atherton Road
Rocklin CA 95765-3716
Tel:(916) 773-8100
www.stantec.com

Copyright Reserved

The Contractor shall verify and be responsible for all dimensions. DO NOT scale the drawing - any errors or omissions shall be reported to Stantec without delay. The Copyrights to all designs and drawings are the property of Stantec. Reproduction or use for any purpose other than that authorized by Stantec is forbidden.

Client/Project Logo

Client/Project

City of San Juan Bautista

SANITARY SEWER FORCE MAIN

San Juan Bautista, California

File Name: SANJ21-001-E022	KB	MGB	JP	2022.04.01
	Dwn.	Dsgn.	Chkd.	YYYY.MM.DD

Title

FLUSH & EQUALIZATION ELECTRICAL PLAN

Project No.	Scale
184031441	AS SHOWN

Revision	Sheet	Drawing No.
	114 of 128	E022

ORIGINAL SHEET - ANSI D

c:\projects\sanj21-001 san juan bap\act\sanj21-001-e022
2022.08.31 7:44:33 PM

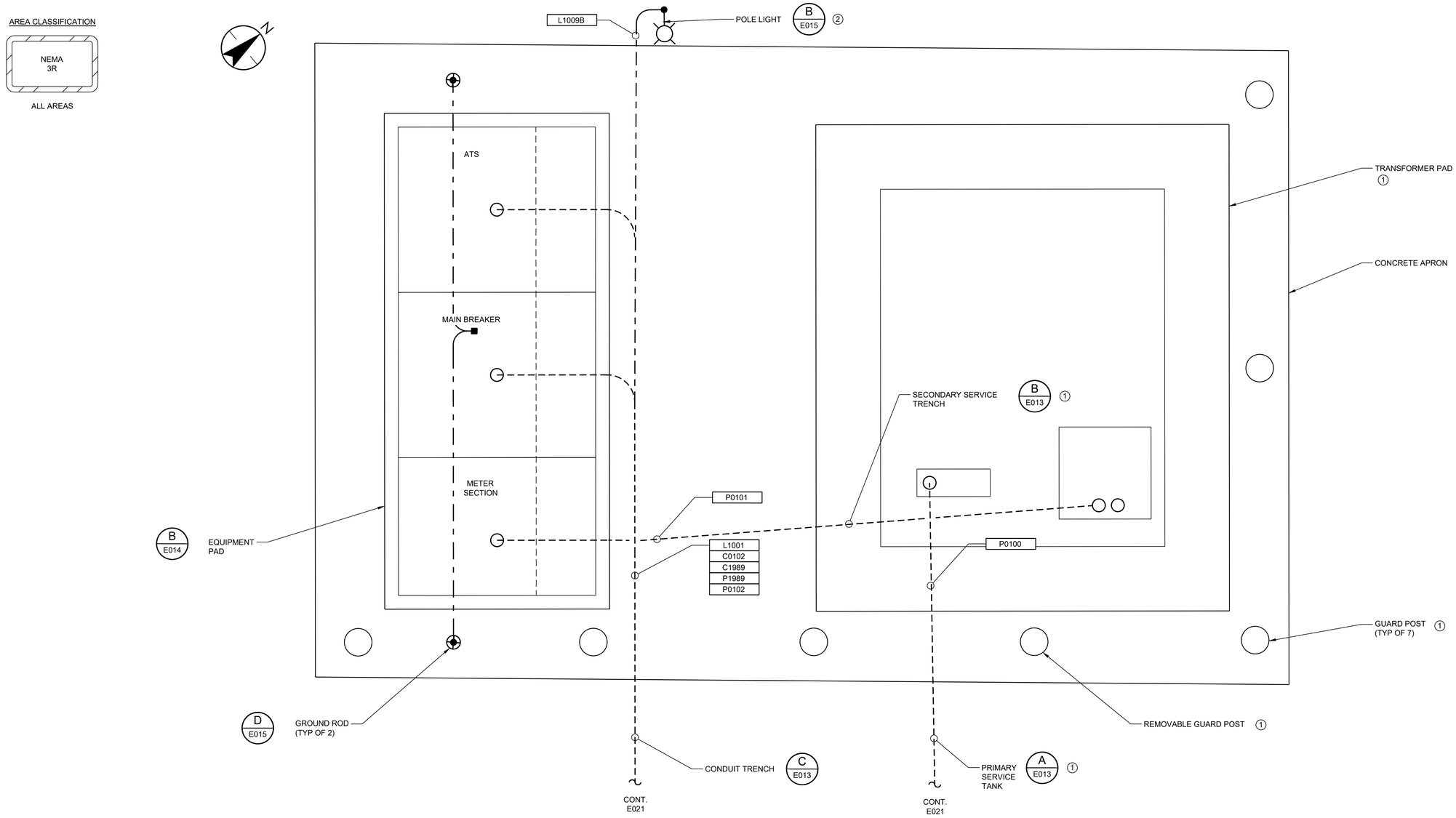

GENERAL NOTES

A. REFERENCE E002 FOR ADDITIONAL ELECTRICAL NOTES.

B. AREA CLASSIFICATION SHALL APPLY UNLESS OTHERWISE NOTED ON THE PLANS AND SPECIFICATIONS.

C. ONLY NEW CONDUITS ARE SHOWN. EXISTING CONDUITS SHALL BE PROTECTED. IF EXISTING CONDUITS ARE DAMAGED, THEY SHALL BE REPLACED OR REPAIRED AT TO COST TO THE OWNER.

SHEET NOTES

1. FURNISH AND INSTALL NEW TRANSFORMER PAD, GUARD POSTS, PRIMARY AND SECONDARY CONDUITS PER PG&E REQUIREMENTS.
2. 12' LIGHT POLE WITH SWITCH TO BYPASS PHOTO CELL. FIXTURE TO BE LITHONIA LIGHTING KAD-LED-1-638530/30K-SR3 OR APPROVED EQUAL.

Revision	By	Appd.	YYYY.MM.DD

Issued	By	Appd	YYYY.MM.DD
BID SET	MGB	JP	2022.09.01

Permit/Seal

REGISTERED PROFESSIONAL ENGINEER
JEREMY J. POLLETT
NO.017557
Exp.6-30-2023
ELECTRICAL
STATE OF CALIFORNIA

Consultant

ControlPoint Engineering, Inc.
3941 Park Drive, Unit 20
El Dorado Hills, CA 95762

T 916.817.1376
F 916.760.1378

Stantec

Stantec Consulting Services Inc.
3875 Atherton Road
Rocklin CA 95765-3716
Tel: (916) 773-8100
www.stantec.com

Copyright Reserved

The Contractor shall verify and be responsible for all dimensions. DO NOT scale the drawing - any errors or omissions shall be reported to Stantec without delay. The Copyrights to all designs and drawings are the property of Stantec. Reproduction or use for any purpose other than that authorized by Stantec is forbidden.

Client/Project Logo

Client/Project

City of San Juan Bautista

SANITARY SEWER FORCE MAIN

San Juan Bautista, California

File Name: SANJ21-001-E021.E023.E024

Dwn.	Dsgn.	Chkd.	YYYY.MM.DD
KB	MGB	JP	2022.04.01

Title

MSB-100 ELECTRICAL PLAN

Project No. 184031441

Scale 1" = 2'

Revision

Sheet 115 of 128

Drawing No. E023

AREA CLASSIFICATION

NEMA 3R

ALL AREAS

N

GENERAL NOTES

A. REFERENCE E002 FOR ADDITIONAL ELECTRICAL NOTES.

B. AREA CLASSIFICATION SHALL APPLY UNLESS OTHERWISE NOTED ON THE PLANS AND SPECIFICATIONS.

C. ONLY NEW CONDUITS ARE SHOWN. EXISTING CONDUITS SHALL BE PROTECTED. IF EXISTING CONDUITS ARE DAMAGED, THEY SHALL BE REPLACED OR REPAIRED AT TO COST TO THE OWNER.

SHEET NOTES

1. 12' LIGHT POLE WITH SWITCH TO BYPASS PHOTO CELL. FIXTURE TO BE LITHONIA LIGHTING KAD-LED-1-638530/30K-SR3 OR APPROVED EQUAL.

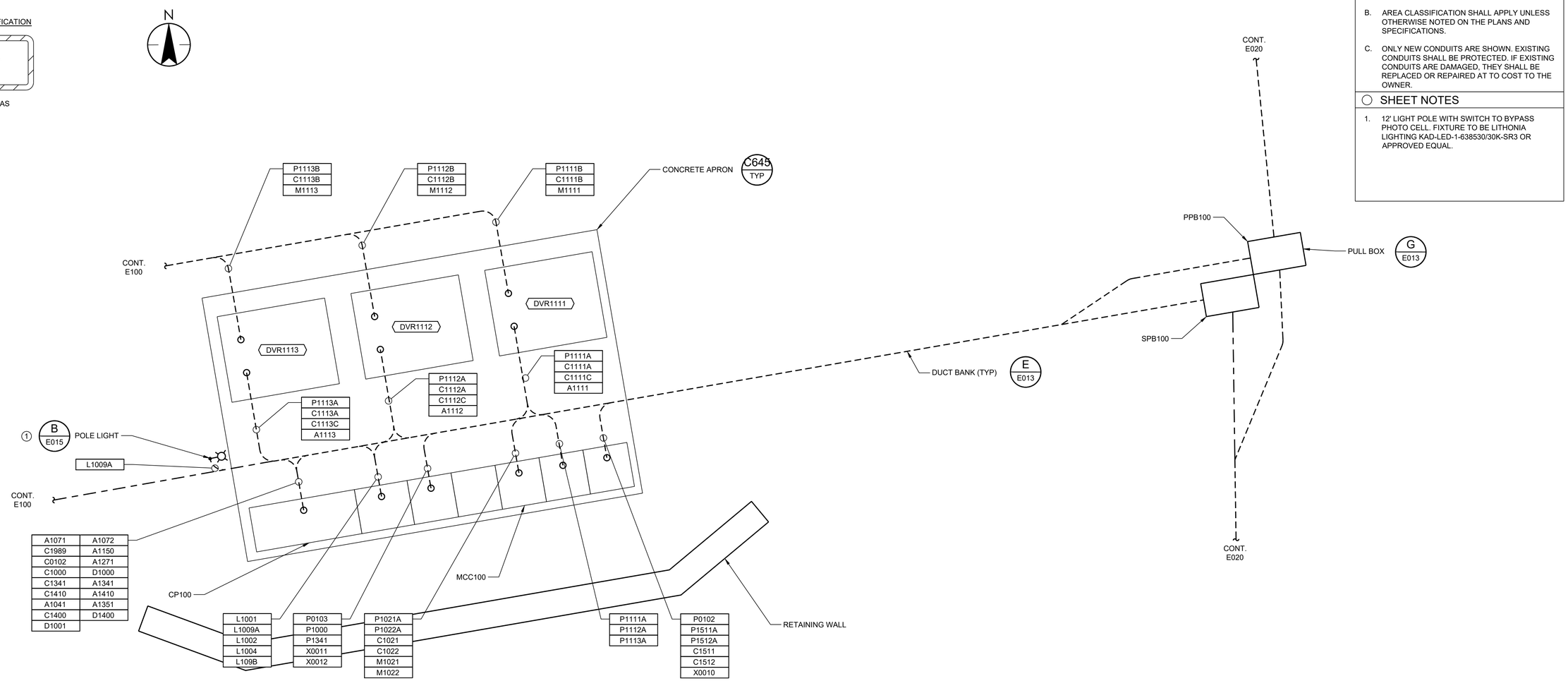

Revision	By	Appd.	YY.MM.DD
BID SET	MGB	JP	2022.09.01
Issued	By	Appd	YYYY.MM.DD

Permit/Seal

REGISTERED PROFESSIONAL ENGINEER
JEREMY J. POLLEY
NO.017557
Exp.6-30-2023
ELECTRICAL
STATE OF CALIFORNIA

Consultant

ControlPoint Engineering, Inc.
3941 Park Drive, Unit 20
El Dorado Hills, CA 95762

T 916.817.1376
F 916.760.1378

Stantec

Stantec Consulting Services Inc.
3875 Atherton Road
Rocklin CA 95765-3716
Tel:(916) 773-8100
www.stantec.com

Copyright Reserved

The Contractor shall verify and be responsible for all dimensions. DO NOT scale the drawing - any errors or omissions shall be reported to Stantec without delay. The Copyrights to all designs and drawings are the property of Stantec. Reproduction or use for any purpose other than that authorized by Stantec is forbidden.

Client/Project Logo

Client/Project

City of San Juan Bautista

SANITARY SEWER FORCE MAIN

San Juan Bautista, California

File Name: SANJ21-001-E021.E023.E024	KB	MGB	JP	2022.04.01
	Dwn.	Dsgn.	Chkd.	YYYY.MM.DD

Title

MCC-100 ELECTRICAL PLAN

Project No.	Scale
184031441	1" = 2'

Revision | Sheet: 116 of 128 | Drawing No.: E024

C:\Projects\San21-001 san juan baut\act\san21-001-e021-e023.dgn
2022.08.31 7:41:56 PM
ORIGINAL SHEET - ANSI D

AREA CLASSIFICATION

CLASS 1
DIV 1

INSIDE WET WELL AND INFLUENT CHANNEL

CLASS 1
DIV 2

18" ABOVE WET WELL AND HEADWORKS CHANNEL 10' HORIZONTALLY

NEMA
3R

WITHIN BOUNDARY OF MCC APRON

NEMA
4X

ALL OTHER AREAS

N

0 2' 4' 8'

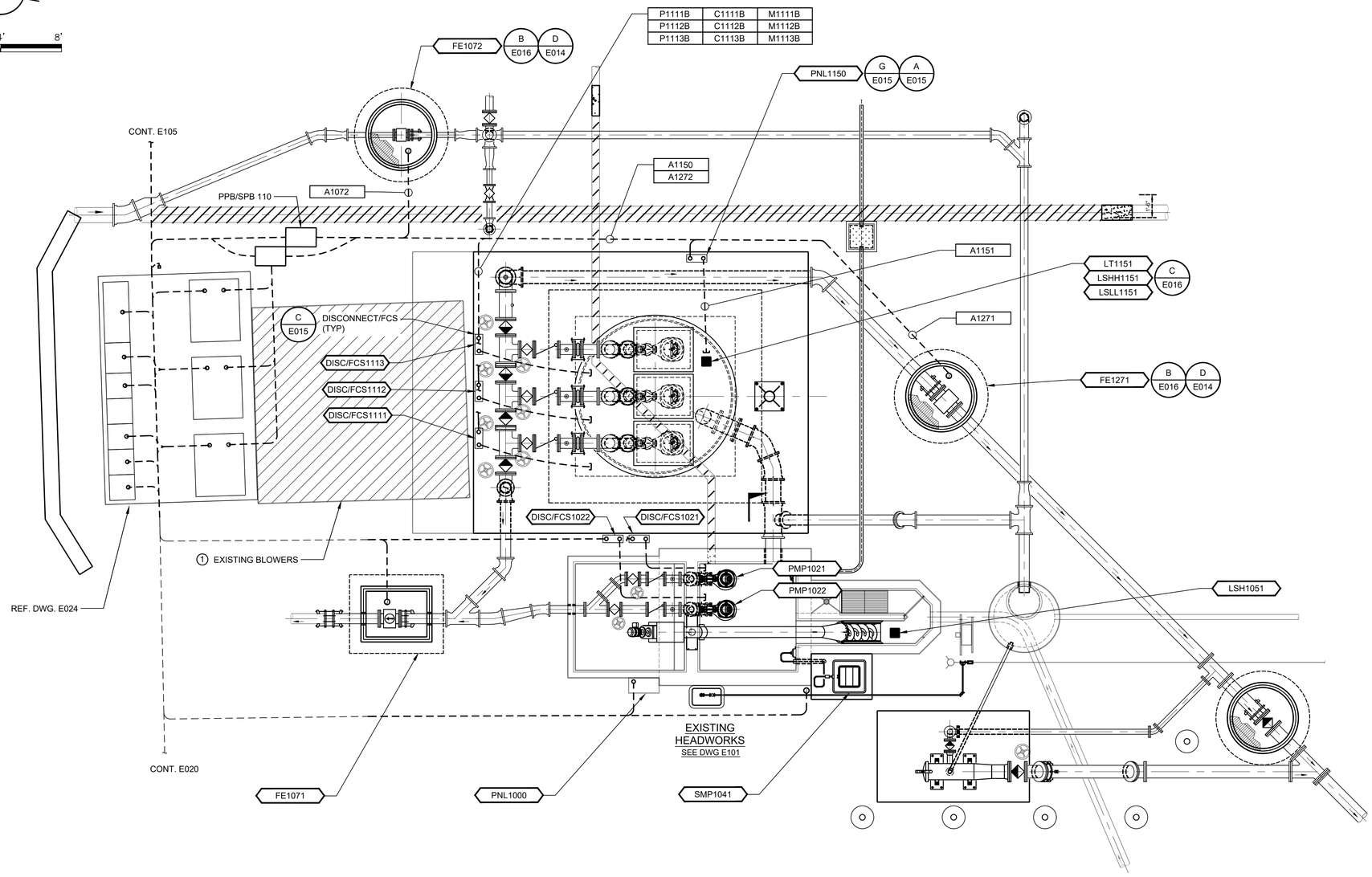

PLAN

SCALE: 1/4"=1'-0"

GENERAL NOTES

A. REFERENCE E002 FOR ADDITIONAL ELECTRICAL NOTES.

B. AREA CLASSIFICATION SHALL APPLY UNLESS OTHERWISE NOTED ON THE PLANS AND SPECIFICATIONS.

C. ONLY NEW CONDUITS ARE SHOWN. EXISTING CONDUITS SHALL BE PROTECTED. IF EXISTING CONDUITS ARE DAMAGED, THEY SHALL BE REPLACED OR REPAIRED AT TO COST TO THE OWNER.

SHEET NOTES

1. EXISTING BLOWERS TO REMAIN IN OPERATION UNTIL PUMP STATION IS ON LINE.

Revision	By	Appd.	YYYY.MM.DD
BID SET	MGB	JP	2022.09.01
Issued	By	Appd	YYYY.MM.DD

Permit/Seal

REGISTERED PROFESSIONAL ENGINEER
JEREMY J. POLLEY
NO.017557
Exp.6-30-2023
ELECTRICAL
STATE OF CALIFORNIA

Consultant

ControlPoint Engineering, Inc.
3941 Park Drive, Unit 20
El Dorado Hills, CA 95762

T 916.817.1376
F 916.760.1378

Stantec

Stantec Consulting Services Inc.
3875 Atherton Road
Rocklin CA 95765-3716
Tel:(916) 773-8100
www.stantec.com

Copyright Reserved

The Contractor shall verify and be responsible for all dimensions. DO NOT scale the drawing - any errors or omissions shall be reported to Stantec without delay. The Copyrights to all designs and drawings are the property of Stantec. Reproduction or use for any purpose other than that authorized by Stantec is forbidden.

Client/Project Logo

Client/Project

City of San Juan Bautista

SANITARY SEWER FORCE MAIN

San Juan Bautista, California

File Name: SANJ21-001-E100

KB	MGB	JP	2022.04.01
Dwn.	Dsgn.	Chkd.	YYYY.MM.DD

Title

HEADWORKS OVERALL AREA ELECTRICAL PLAN

Project No. 184031441

Scale 1/4" = 1'-0"

Revision

Sheet 117 of 128

Drawing No. E100

ORIGINAL SHEET - ANSI D

c:\projects\sanj21-001 san juan bapt\act\sanj21-001-e100 2022.08.31 7:42:27 PM

AREA CLASSIFICATION

CLASS 1
DIV 1

INSIDE INFLUENT CHANNEL

CLASS 1
DIV 2

18" ABOVE INFLUENT CHANNEL WALLS EXTENDING 10' HORIZONTALLY

NEMA
4X

ALL OTHER AREAS

N

0 2' 4' 6'

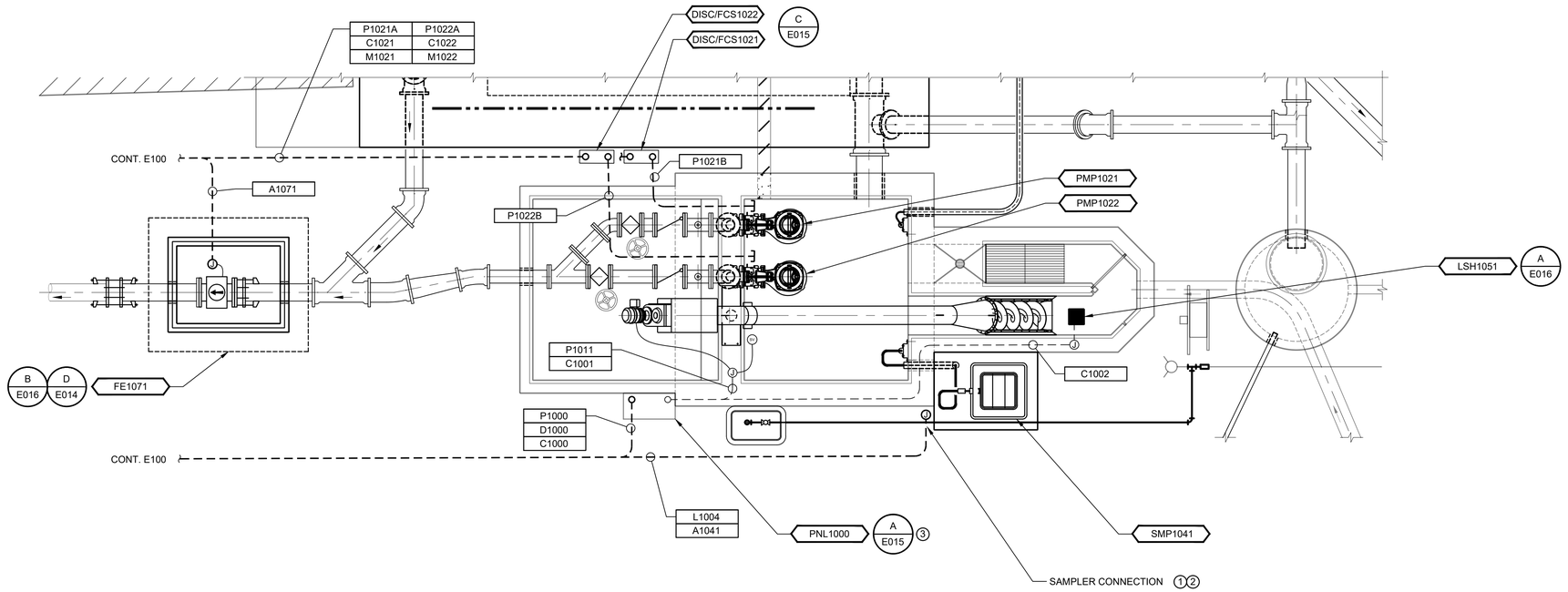

HEADWORKS PARTIAL PLAN

SCALE: 3/8"=1'-0"

GENERAL NOTES

A. REFERENCE E002 FOR ADDITIONAL ELECTRICAL NOTES.

B. AREA CLASSIFICATION SHALL APPLY UNLESS OTHERWISE NOTED ON THE PLANS AND SPECIFICATIONS.

C. ONLY NEW CONDUITS ARE SHOWN. EXISTING CONDUITS SHALL BE PROTECTED. IF EXISTING CONDUITS ARE DAMAGED, THEY SHALL BE REPLACED OR REPAIRED AT TO COST TO THE OWNER.

○ SHEET NOTES

1. PROVIDE AND INSTALL WP/GFCI W/METAL IN USE COVER FOR SAMPLER 120VAC CONNECTOR.
2. PROVIDE AND INSTALL WP JUNCTION BOX FOR PLACING SIGNAL CABLE CONNECTION TO SAMPLER. USE NON-METALLIC CORD GRIP FOR SIGNAL CABLE CONNECTION TO JB.
3. INSTALL NEW SCREEN CONTROL PANEL IN PACE OF EXISTING. TWO (2) PANEL SUPPORTS ARE REQUIRED FOR PNL1000.

Revision	By	Appd.	YY.MM.DD
BID SET	MGB	JP	2022.09.01
Issued	By	Appd	YYYY.MM.DD

Permit/Seal

REGISTERED PROFESSIONAL ENGINEER
JEREMY J. POLLEY
NO.017557
Exp.6-30-2023
ELECTRICAL
STATE OF CALIFORNIA

Consultant

ControlPoint Engineering, Inc.
3941 Park Drive, Unit 20
El Dorado Hills, CA 95762

T 916.817.1376
F 916.760.1378

Stantec

Stantec Consulting Services Inc.
3875 Atherton Road
Rocklin CA 95765-3716
Tel:(916) 773-8100
www.stantec.com

Copyright Reserved
The Contractor shall verify and be responsible for all dimensions. DO NOT scale the drawing - any errors or omissions shall be reported to Stantec without delay.
The Copyrights to all designs and drawings are the property of Stantec. Reproduction or use for any purpose other than that authorized by Stantec is forbidden.

Client/Project Logo

Client/Project

City of San Juan Bautista

SANITARY SEWER FORCE MAIN

San Juan Bautista, California

File Name: SANJ21-001-E100	KB	MGB	JP	2022.04.01
	Dwn.	Dsgn.	Chkd.	YYYY.MM.DD

Title

HEADWORKS ELECTRICAL PLAN

Project No.	Scale
184031441	AS SHOWN

Revision	Sheet	Drawing No.
	118 of 128	E101

ORIGINAL SHEET - ANSI D

C:\projects\sanj21-001 san juan bap\civil\sanj21-001-e100 2022.08.31 7:44:17 PM

AREA CLASSIFICATION

NEMA 4X

ENTIRE AREA

0 2' 4' 6'

N

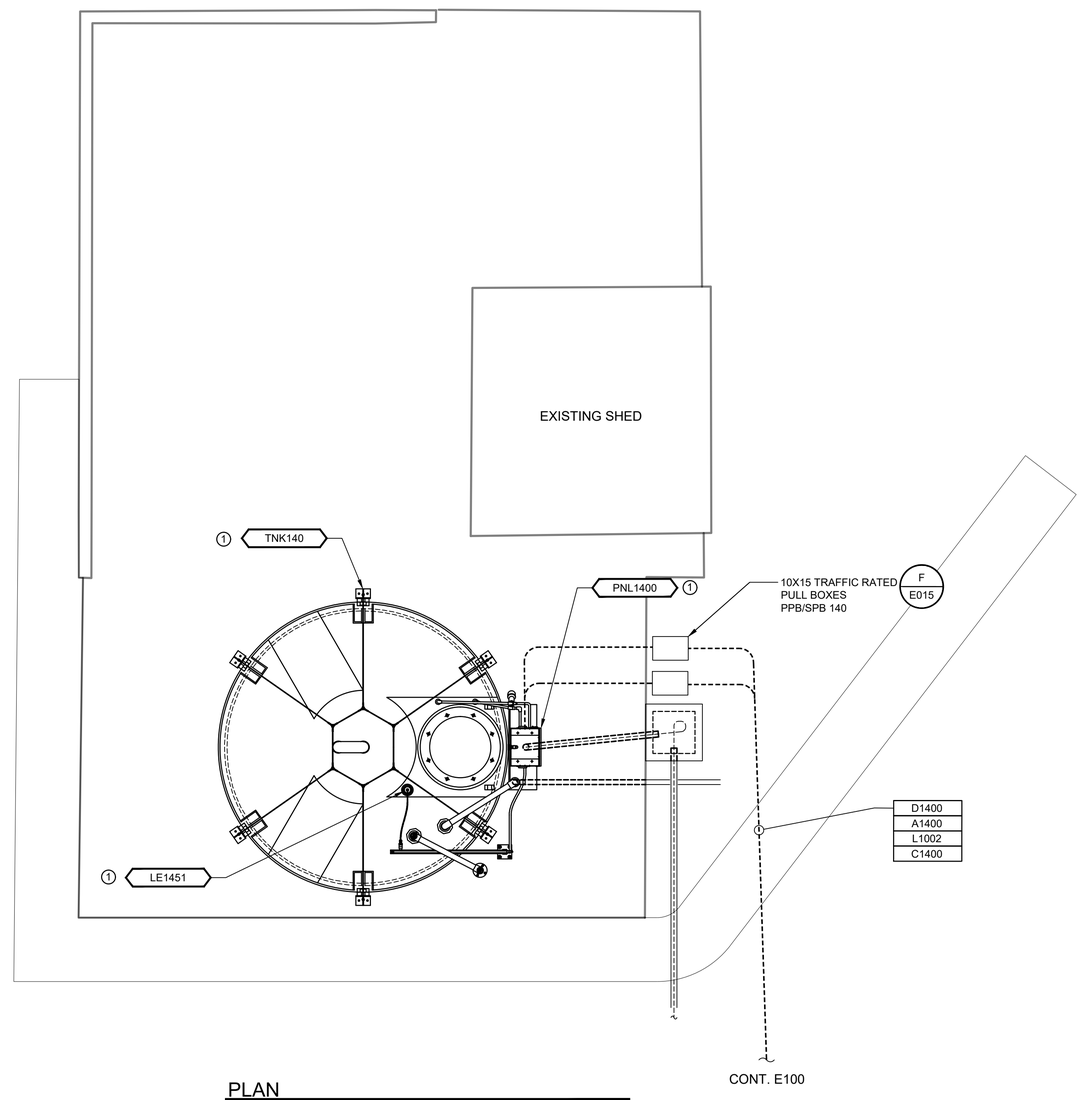

PLAN

SCALE: 3/8" = 1'-0"

GENERAL NOTES

A. REFERENCE E002 FOR ADDITIONAL ELECTRICAL NOTES.

B. AREA CLASSIFICATION SHALL APPLY UNLESS OTHERWISE NOTED ON THE PLANS AND SPECIFICATIONS.

C. ONLY NEW CONDUITS ARE SHOWN. EXISTING CONDUITS SHALL BE PROTECTED. IF EXISTING CONDUITS ARE DAMAGED, THEY SHALL BE REPLACED OR REPAIRED AT TO COST TO THE OWNER.

○ SHEET NOTES

1. VENDOR PROVIDED AND CONTRACTOR INSTALLED.

Revision	By	Appd.	YYYY.MM.DD
BID SET	MGB	JP	2022.09.01
Issued	By	Appd	YYYY.MM.DD

Permit/Seal

REGISTERED PROFESSIONAL ENGINEER
JEREMY J. POLLEY
NO.017557
Exp.6-30-2023
ELECTRICAL
STATE OF CALIFORNIA

Consultant

ControlPoint Engineering, Inc.
3941 Park Drive, Unit 20
El Dorado Hills, CA 95762

T 916.817.1376
F 916.760.1378

Stantec

Stantec Consulting Services Inc.
3875 Atherton Road
Rocklin CA 95765-3716
Tel:(916) 773-8100
www.stantec.com

Copyright Reserved

The Contractor shall verify and be responsible for all dimensions. DO NOT scale the drawing - any errors or omissions shall be reported to Stantec without delay. The Copyrights to all designs and drawings are the property of Stantec. Reproduction or use for any purpose other than that authorized by Stantec is forbidden.

Client/Project Logo

Client/Project

City of San Juan Bautista

SANITARY SEWER FORCE MAIN

San Juan Bautista, California

File Name: SANJ21-001-E105	KB	MGB	JP	2022.04.01
	Dwn.	Dsgn.	Chkd.	YYYY.MM.DD

Title

CHEMICAL SYSTEM ELECTRICAL PLAN

Project No. 184031441

Scale AS SHOWN

Revision

Sheet 119 of 128

Drawing No. E105

ORIGINAL SHEET - ANSI D

C:\projects\sanj21-001 san juan bap\dwt\sanj21-001-e105 2022.08.31 7:41:41 PM

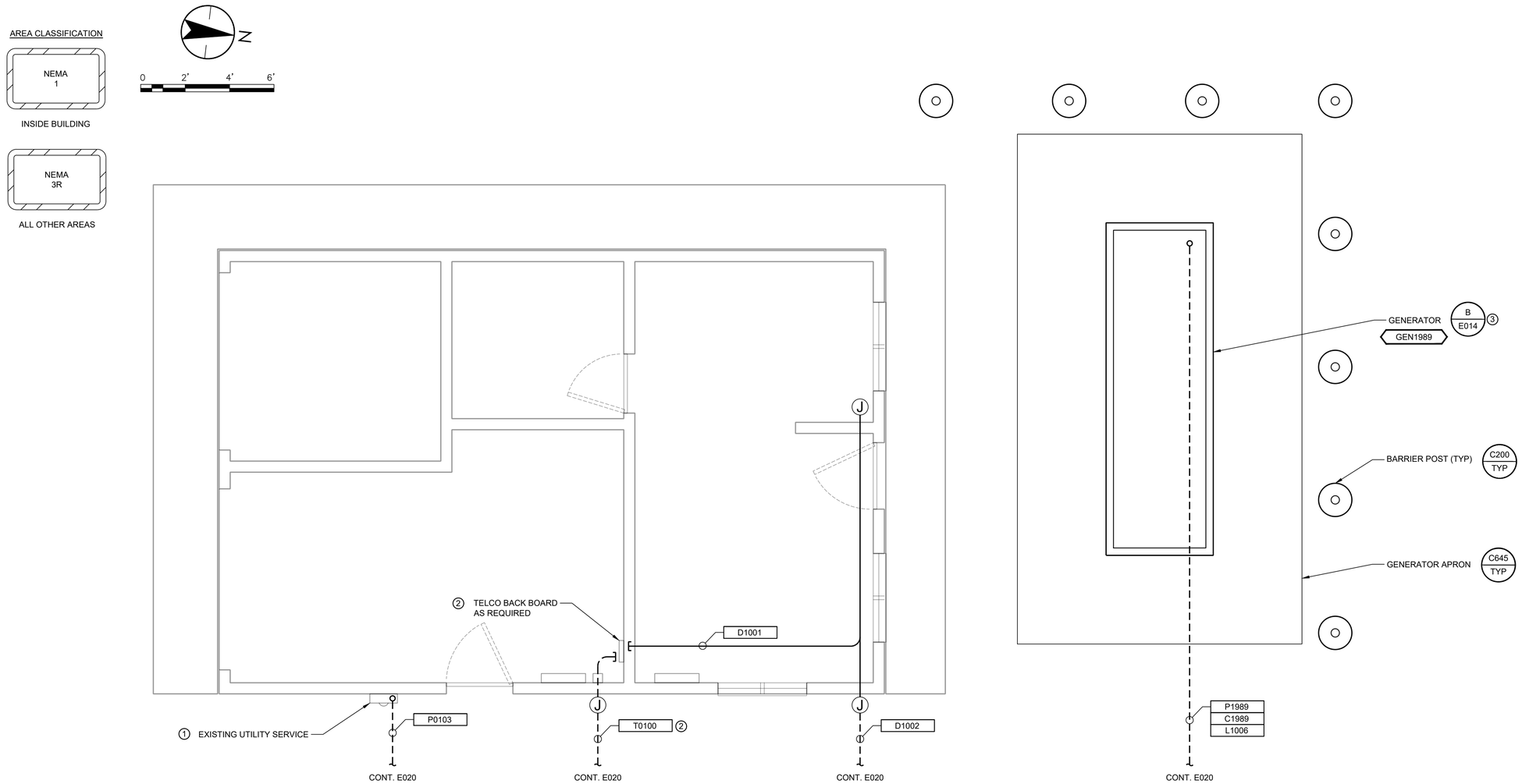

GENERAL NOTES

A. REFERENCE E002 FOR ADDITIONAL ELECTRICAL NOTES.

B. AREA CLASSIFICATION SHALL APPLY UNLESS OTHERWISE NOTED ON THE PLANS AND SPECIFICATIONS.

C. ONLY NEW CONDUITS ARE SHOWN. EXISTING CONDUITS SHALL BE PROTECTED. IF EXISTING CONDUITS ARE DAMAGED, THEY SHALL BE REPLACED OR REPAIRED AT TO COST TO THE OWNER.

SHEET NOTES

1. REPLACE EXISTING UTILITY SERVICE WITH 200A 3POLE DISCONNECT AND FEED FROM MCC100. COORDINATE THE DISCONNECTION OF EXISTING SERVICE WITH PG&E.
2. REPLACE EXISTING OVERHEAD TELCO SERVICE WITH NEW UNDERGROUND SERVICE. COORDINATE SERVICE CHANGE WITH TELCO AND PROVIDE REQUIRED UPGRADES AS REQUIRED INCLUDING TELCO BACKBOARD IN EXISTING STORAGE ROOM.
3. NEW GENERATOR PAD TO BE DESIGNED AND INSTALLED BY CONTRACTOR. DESIGN BASED ON APPROVED GENERATOR AND SEISMIC DESIGN CRITERIA PER SPECIFICATIONS.

EXISTING CONTROL BUILDING & NEW EMERGENCY GENERATOR PLAN

SCALE: 1/2"=1'-0"

Revision	By	Appd.	YYYY.MM.DD

Issued	By	Appd	YYYY.MM.DD
BID SET	MGB	JP	2022.09.01

Permit/Seal

REGISTERED PROFESSIONAL ENGINEER
JEREMY J. POLLETT
NO.017557
Exp.6-30-2023
ELECTRICAL
STATE OF CALIFORNIA

Consultant

ControlPoint Engineering, Inc.
3941 Park Drive, Unit 20
El Dorado Hills, CA 95762

T 916.817.1376
F 916.760.1378

Stantec

Stantec Consulting Services Inc.
3875 Atherton Road
Rocklin CA 95765-3716
Tel:(916) 773-8100
www.stantec.com

Copyright Reserved

The Contractor shall verify and be responsible for all dimensions. DO NOT scale the drawing - any errors or omissions shall be reported to Stantec without delay. The Copyrights to all designs and drawings are the property of Stantec. Reproduction or use for any purpose other than that authorized by Stantec is forbidden.

Client/Project Logo

Client/Project

City of San Juan Bautista

SANITARY SEWER FORCE MAIN

San Juan Bautista, California

File Name: SANJ21-001-E200

Dwn.	Dsgn.	Chkd.	YYYY.MM.DD
KB	MGB	JP	2022.04.01

Title

EXISTING OPERATIONS BUILDING ELECTRICAL PLAN

Project No. 184031441

Scale 3/8" = 1'-0"

Revision

Sheet 120 of 128

Drawing No. E200

ORIGINAL SHEET - ANSI D

c:\projects\sanj21-001 san juan bap\act\sanj21-001-e200
2022.08.31 7:42:58 PM

INSTRUMENT SYMBOLS

SYMBOL	DESCRIPTION
XXX / XXX	FIELD MOUNTED INSTRUMENT
XXX / XXX	FACE MOUNTED INSTRUMENT ON LOCAL PANEL, OPERATOR ACCESSIBLE
XXX / XXX	INSTRUMENT MOUNTED IN LOCAL PANEL, OPERATOR INACCESSIBLE
XXX / XXX	FACE MOUNTED INSTRUMENT ON FIELD PANEL, OPERATOR ACCESSIBLE
XXX / XXX	INSTRUMENT MOUNTED IN FIELD PANEL, OPERATOR INACCESSIBLE
I DWG#	OPERATION PERFORMED WITH LOGIC OR HARDWIRED DEVICES - REFERENCE ELEMENTARY DWG. #
X	LAMP INDICATION (STATUS OR ALARM)
R#-C#	ANNUNCIATOR WINDOW R - ROW # C - COLUMN #
XX / X	COMMUNICATIONS POINT
XXXXX	DISCRETE INPUT
	DISCRETE OUTPUT
	ANALOG INPUT
	ANALOG OUTPUT
FY *	INSTRUMENT PANEL MOUNTED WITH COMPUTING, CONVERTING FUNCTION

CONVERT */*

E - VOLTAGE	H - HYDRAULIC
I - CURRENT	O - ELECTROMAGNETIC, SONIC
P - PNEUMATIC	R - RESISTANCE (ELECT.)
A - ANALOG	D - DIGITAL
B - BINARY	

COMPUTE *

SUMMING	Σ	AVERAGING	Σ/n
SUBTRACTOR	−	RATIO	I1
MULTIPLYING	X	DIFFERENCE	Δ
DIVIDING	÷	HIGH SELECTING	>
ROOT EXTRACTION	n√	LOW SELECTING	<
PROPORTIONAL	P	INTEGRAL	I
DERIVITIVE	D	INTERLOCK	

XXXXX	VALVE/GATE NUMBER
XXXXX	EQUIPMENT NUMBER
XXX / XXX	PLC OR COMPUTER FUNCTION PERFORMING OPERATION WITH VISUAL INDICATION
XXX / XXX	PLC OR COMPUTER FUNCTION PERFORMING OPERATION WITH VISUAL ALARM INDICATION
XXX / XXX	PLC OR COMPUTER PERFORMING INTERNAL OPERATION
1	AUTODIALER PRIORITY # PC BASED SOFTWARE

SYMBOL	DESCRIPTION
	HARDWIRE CONNECTION
	EXISTING ELECTRIC SIGNAL
	ELECTRICAL SIGNAL
	ELECTRIC POWER/CONTROL
	PNEUMATIC SIGNAL
	CAPILLARY TUBING (FILLED SYSTEM)
	HYDRAULIC SIGNAL
ES / AS	SONIC OR ELECTROMAGNETIC SIGNAL
	LOGIC OR DATA SIGNAL
	MAIN PROCESS LINE
	SECONDARY PROCESS LINE
	AUXILIARY PROCESS LINE
	DIRECTION OF FLOW
	MANUFACTURER'S PRE-WIRING
ES / AS	ELECTRIC SUPPLY OR AIR SUPPLY
M	MOTOR
	CENTRIFUGAL PUMP
	BLOWER OR FAN
	COMPRESSOR
	SUBMERSIBLE PUMP
	VERTICAL PUMP
	ROTARY LOBE OR GEAR PUMP
	METERING PUMP
	MIXER
	PROGRESSIVE CAVITY PUMP
SV	SOLENOID VALVE
	AUDIBLE ALARM (BUZZER OR HORN)
D	DRAIN
I2	PAGE THAT LINE IS CONTINUED ON
	REDUCER
	BLIND FLANGED END
	CAPPED END
	TELEPHONE

SYMBOL	DESCRIPTION
	DIAPHRAGM VALVE
	VALVE ACTUATOR
P	VALVE POSITIONER
	GLOBE VALVE
	GATE VALVE OR PINCH VALVE (NORMALLY OPEN)
	GATE VALVE OR PINCH VALVE (NORMALLY CLOSED)
	PLUG VALVE (NORMALLY OPEN)
	PLUG VALVE (NORMALLY CLOSED)
	BALL VALVE (NORMALLY OPEN)
	BALL VALVE (NORMALLY CLOSED)
	BALL CHECK VALVE
	BUTTERFLY VALVE
	CHECK VALVE
	SLUICE GATE (NORMALLY OPEN)
	SLUICE GATE (NORMALLY CLOSED)
	SLIDE GATE (NORMALLY OPEN)
	SLIDE GATE (NORMALLY CLOSED)
	VACUUM RELIEF VALVE
	PRESSURE RELIEF VALVE
	DIAPHRAGM SEAL
	PULSATION DAMPENER
	PRESSURE REDUCING VALVE
	QUICK CONNECT W/CHECK
	ARV
M	MAGNETIC FLOW METER
X" MAG	MAGNETIC FLOW TUBE
	CAM-LOC

ABBREVIATIONS

A	AMPERES, AMBER	mA	MILLIAMPERES
AC	ALTERNATING CURRENT	MIN	MINIMUM
ACU	AIR CONDITIONING UNIT	MOA	MANUAL-OFF-AUTO
ADR	AIR DRYER	MOT	MOTOR OVERTEMP SENSOR
AER	AERATOR	MOV	MOTOR OPERATED VALVE
AGR	AGITATOR	MTU	MODULAR TREATMENT UNIT
AI	ANALOG INPUT	MUX	MULTIPLEXER
AO	ANALOG OUTPUT	MWR	MOTORIZED WEIR
B	BLUE	MXR	MIXER
BLR	BLOWER	N	NEUTRAL
C	CLOSE, CONTROL	NC	NORMALLY CLOSED
CFE	CLEARWELL FILTER EFFLUENT	NO	NORMALLY OPEN
CLR	CLARIFIER	O	OPEN
CMP	COMPRESSOR	OAC	OPEN-AUTO-CLOSE
CR	CONTROL RELAY	OCA	OPEN-CLOSE-AUTO
CTF	CENTRIFUGE	PB	PUSHBUTTON
d	DIFFERENTIAL	pH	HYDROGEN ION CONCENTRATION
DC	DIRECT CURRENT	PID	PROPORTIONAL/INTEGRAL/DERIVATIVE
(DDM)	DIGITAL DISPLAY MODULE	PLC	PROGRAMMABLE LOGIC CONTROLLER
DI	DIGITAL INPUT	PMP	PUMP
DO	DIGITAL OUTPUT	PNL	PANEL
DPDT	DOUBLE POLE DOUBLE THROW	POT	POTENTIOMETER
DRV	DRIVE	POV	PNEUMATIC OPERATED VALVE
(E)	EXISTING	PS	PRESSURE SWITCH
ETM	ELAPSED TIME METER	PRV	PRESSURE RELIEF VALVE
(F)	FUTURE	PTT	PUSH TO TEST
FAN	FAN	PV	PROCESS VARIABLE
FC	FAIL CLOSED	R	RED
FE	FLOW METER ELEMENT	(R)	EXISTING TO BE REMOVED OR RELOCATED
FLC	FLOCCULATOR	REF	REFERENCE
FLP	FAIL LAST POSITION	RVSS	REDUCED VOLTAGE SOLID STATE
FLT	FILTER	S	SWITCH
FO	FAIL OPEN	(SIM)	SIGNAL INPUT MODULE
FS	FLOAT SWITCH	SCR	SILICON CONTROLLED RECTIFIER
FVNR	FULL VOLTAGE NON REVERSING	(SOM)	SIGNAL OUTPUT MODULE
G	GREEN	SMP	TYPICAL
G, GND	GROUND	SP	SET POINT
GNR	MACERATOR/GRINDER	SS	SURGE SUPPRESSOR
HMI	HUMAN MACHINE INTERFACE	TDD, TDE	TIME DELAY RELAY
HP AIR	HIGH PRESSURE AIR	TWP	TWISTED PAIR
HOA	HAND-OFF-AUTO	TWSP	TWISTED SHIELDED PAIR
HOG	HYDRAULIC OPERATED GATE	TYP	TYPICAL
I	INTERLOCK	UVC	ULTRAVIOLET CHANNEL
I/0	INPUT/OUTPUT	V	VOLTS, VOLTAGE
ISR	INTRINSICALLY SAFE RELAY	VFD	VARIABLE FREQUENCY DRIVE
LOR	LOCAL/OFF/REMOTE	VLV	VALVE
LOS	LOCK-OUT STOP		
LP AIR	LOW PRESSURE AIR		

P & I DIAGRAM INSTRUMENT FUNCTIONAL IDENTIFICATION

CODE LETTER	FIRST LETTER(S)		SUCCEEDING LETTER(S)		
	MEASURED OR INITIATING VARIABLE	MODIFIER	READOUT OR PASSIVE FUNCTION	OUTPUT FUNCTION	MODIFIER
A	ANALYSIS		ALARM		AUTO
B	BURNER FLAME				
C	CHLORINE			CONTROL	CLOSE
D	DENSITY	DIFFERENTIAL	DIRECTION		
E	VOLTAGE		ELEMENT, SENSOR		
F	FLOW	RATIO	FUEL		FAILURE
G	GAUGING		VIEWING DEVICE		
H	HAND				HIGH/HAND
I	CURRENT		INDICATE		
J	POWER	SCAN			
K	TIME	TIME RATE OF CHANGE		CONTROL STATION	
L	LEVEL		PILOT LIGHT		LOW/LOCAL
M	MOISTURE/MOTOR	MOMENTARY	MOTOR		MIDDLE/MANUAL
N	STATUS				
O	OPERATOR		ORIFICE		OPEN/OVERLOAD
P	PRESSURE		POINT		
Q	EVENT	TOTALIZE	TOTAL		
R	RESET		RECORD		RUNNING/REMOTE
S	SPEED	SAFETY		SWITCH	STOP/SPEED
T	TEMPERATURE		TEST	TRANSMIT	
U	MULTIVARIABLE		MULTIFUNCTION		
V	VIBRATION/VALVE			VALVE	
W	FORCE, WEIGHT		WELL		
X	TELEMETRY INTERFACE				
Y	COMPUTER INTERFACE			COMPUTE/RELAY/ CONVERTER	
Z	POSITION			ACTUATE	POSITION

ORIGINAL SHEET - ANSI D

C:\Projects\San\21-001 san juan baut\civil\san21-001-I001 2022.08.31 7:44:46 PM

Revision	By	Appd	YYYY.MM.DD

BID SET	MGB	JP	2022.09.01
Issued	By	Appd	YYYY.MM.DD

Permit/Seal

REGISTERED PROFESSIONAL ENGINEER — JEREMY J. POLLET — No. 017557 — Exp. 6-30-2023 — ELECTRICAL — STATE OF CALIFORNIA

Consultant

ControlPoint Engineering, Inc.
3941 Park Drive, Unit 20
El Dorado Hills, CA 95762

T 916.817.1376
F 916.760.1378

Stantec

Stantec Consulting Services Inc.
3875 Atherton Road
Rocklin CA 95765-3716
Tel:(916) 773-8100
www.stantec.com

Copyright Reserved
The Contractor shall verify and be responsible for all dimensions. DO NOT scale the drawing - any errors or omissions shall be reported to Stantec without delay.
The Copyrights to all designs and drawings are the property of Stantec. Reproduction or use for any purpose other than that authorized by Stantec is forbidden.

Client/Project Logo

Client/Project

City of San Juan Bautista

SANITARY SEWER FORCE MAIN

San Juan Bautista, California

File Name: SANJ21-001-I001	KB	MGB	JP	2022.04.01
	Dwn.	Dsgn.	Chkd.	YYYY.MM.DD

Title

INSTRUMENT SYMBOLS & ABBREVIATIONS

Project No.	Scale
184031441	NTS

Revision	Sheet	Drawing No.
	121 of 128	I001

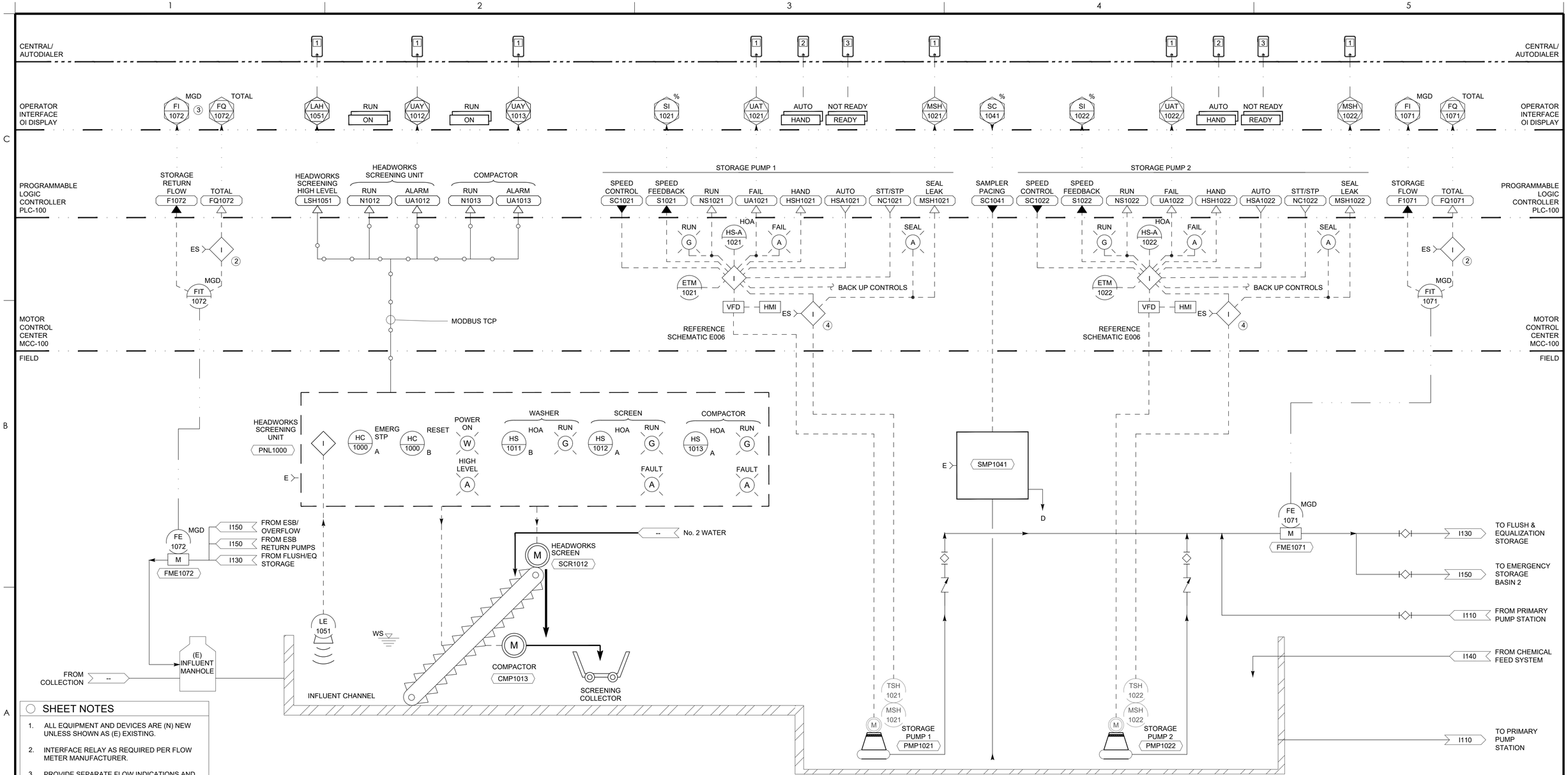

SHEET NOTES

1. ALL EQUIPMENT AND DEVICES ARE (N) NEW UNLESS SHOWN AS (E) EXISTING.
2. INTERFACE RELAY AS REQUIRED PER FLOW METER MANUFACTURER.
3. PROVIDE SEPARATE FLOW INDICATIONS AND TOTALS FOR FLUSHING CYCLES AND EMERGENCY STORAGE RETURN (BASED ON MOV POSITION)
4. PUMP PROTECTION RELAY PROVIDED BY PUMP SUPPLIER INSTALLED BY MCC SUPPLIER.

Revision	By	Appd	YYYY.MM.DD

Issued	By	Appd	YYYY.MM.DD
BID SET	MGB	JP	2022.09.01

Permit/Seal

REGISTERED PROFESSIONAL ENGINEER JEREMY J. POLLETT NO.017557 Exp.6-30-2023 ELECTRICAL STATE OF CALIFORNIA

Consultant

ControlPoint Engineering, Inc.
3941 Park Drive, Unit 20
El Dorado Hills, CA 95762

T 916.817.1376
F 916.760.1378

Stantec

Stantec Consulting Services Inc.
3875 Atherton Road
Rocklin CA 95765-3716
Tel: (916) 773-8100
www.stantec.com

Copyright Reserved
The Contractor shall verify and be responsible for all dimensions. DO NOT scale the drawing - any errors or omissions shall be reported to Stantec without delay. The Copyrights to all designs and drawings are the property of Stantec. Reproduction or use for any purpose other than that authorized by Stantec is forbidden.

Client/Project Logo

Client/Project

City of San Juan Bautista

SANITARY SEWER FORCE MAIN

San Juan Bautista, California

File Name: SANJ21-001-I100

Dwn.	Dsgn.	Chkd.	YYYY.MM.DD
KB	MGB	JP	2022.04.01

Title

HEADWORKDS P&ID

Project No. 184031441

Scale NTS

Revision

Sheet 122 of 128

Drawing No. I100

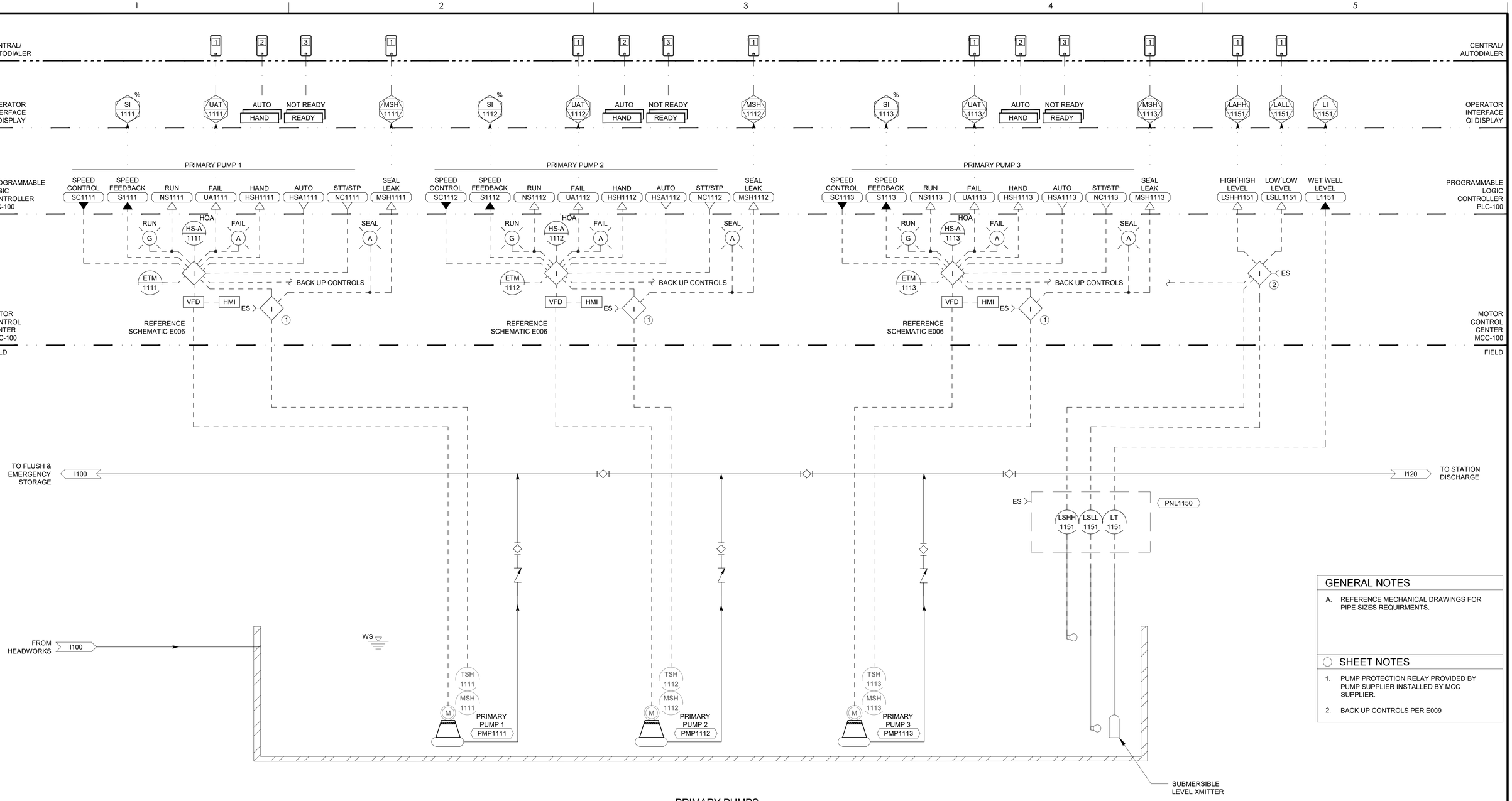

PRIMARY PUMPS

GENERAL NOTES

A. REFERENCE MECHANICAL DRAWINGS FOR PIPE SIZES REQUIRMENTS.

SHEET NOTES

1. PUMP PROTECTION RELAY PROVIDED BY PUMP SUPPLIER INSTALLED BY MCC SUPPLIER.
2. BACK UP CONTROLS PER E009

Revision	By	Appd	YYYY.MM.DD
BID SET	MGB	JP	2022.09.01
Issued	By	Appd	YYYY.MM.DD

Permit/Seal

REGISTERED PROFESSIONAL ENGINEER — JEREMY J. POLLET — NO.017557 — Exp.6-30-2023 — ELECTRICAL — STATE OF CALIFORNIA

Consultant

ControlPoint Engineering, Inc.
3941 Park Drive, Unit 20
El Dorado Hills, CA 95762

T 916.817.1376
F 916.760.1378

Stantec

Stantec Consulting Services Inc.
3875 Atherton Road
Rocklin CA 95765-3716
Tel:(916) 773-8100
www.stantec.com

Copyright Reserved

The Contractor shall verify and be responsible for all dimensions. DO NOT scale the drawing - any errors or omissions shall be reported to Stantec without delay. The Copyrights to all designs and drawings are the property of Stantec. Reproduction or use for any purpose other than that authorized by Stantec is forbidden.

Client/Project Logo

Client/Project

City of San Juan Bautista

SANITARY SEWER FORCE MAIN

San Juan Bautista, California

File Name: SANJ21-001-I110 | KB Dwn. | MGB Dsgn. | JP Chkd. | 2022.04.01 YYYY.MM.DD

Title

PRIMARY PUMP STATION P&ID

Project No. 184031441 | Scale NTS

Revision | Sheet 123 of 128 | Drawing No. I110

ORIGINAL SHEET - ANSI D

c:\projects\sanj21-001 san juan bau\act\sanj21-001-i110 2022.08.31 7:42:59 PM

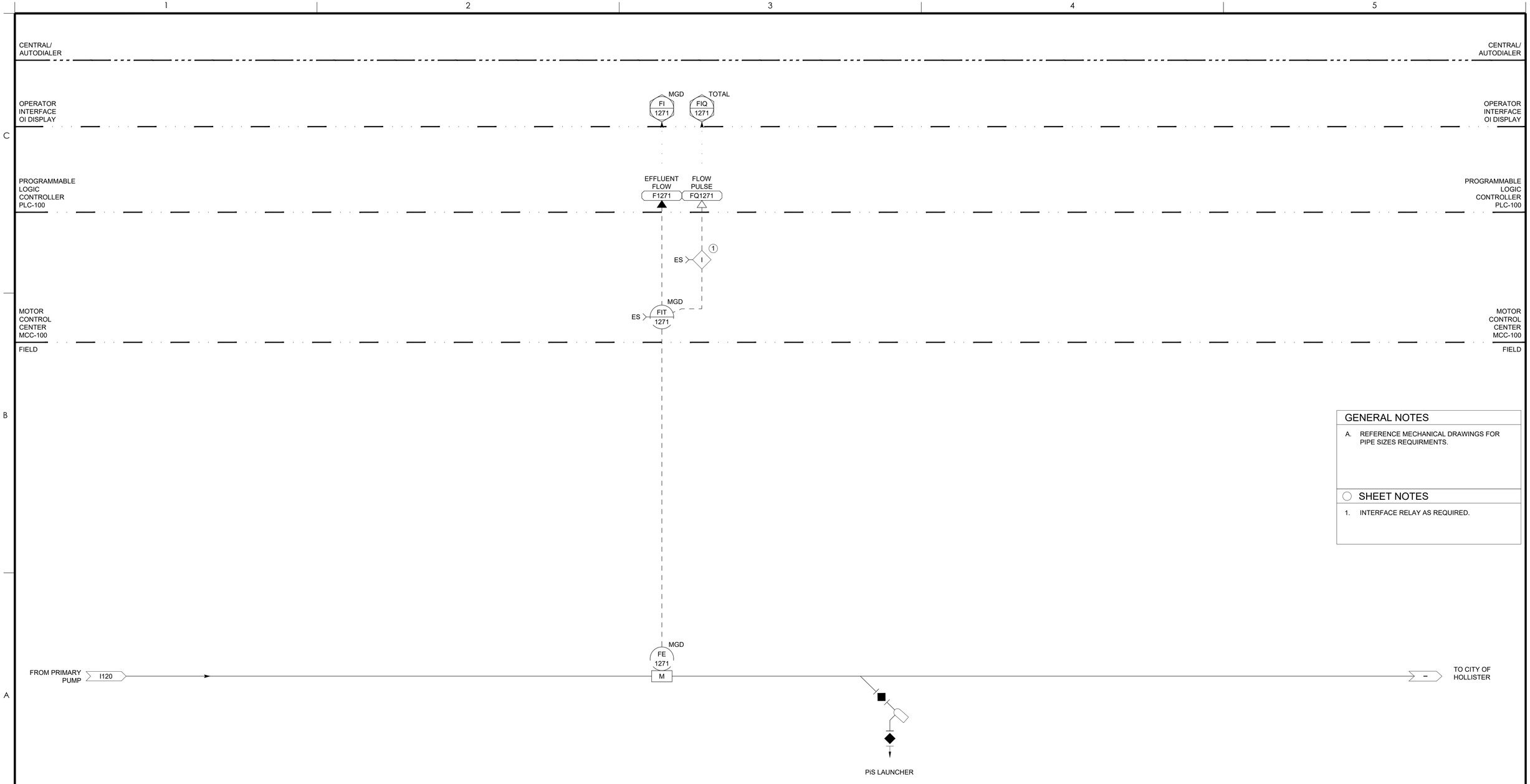

GENERAL NOTES

A. REFERENCE MECHANICAL DRAWINGS FOR PIPE SIZES REQUIRMENTS.

SHEET NOTES

1. INTERFACE RELAY AS REQUIRED.

Revision	By	Appd	YYYY.MM.DD

Issued	By	Appd	YYYY.MM.DD
BID SET	MGB	JP	2022.09.01

Permit/Seal

REGISTERED PROFESSIONAL ENGINEER
JEREMY J. POLLET
NO.017557
Exp.6-30-2023
ELECTRICAL
STATE OF CALIFORNIA

Consultant

ControlPoint Engineering, Inc.
3941 Park Drive, Unit 20
El Dorado Hills, CA 95762

T 916.817.1376
F 916.760.1378

Stantec

Stantec Consulting Services Inc.
3875 Atherton Road
Rocklin CA 95765-3716
Tel: (916) 773-8100
www.stantec.com

Copyright Reserved

The Contractor shall verify and be responsible for all dimensions. DO NOT scale the drawing - any errors or omissions shall be reported to Stantec without delay. The Copyrights to all designs and drawings are the property of Stantec. Reproduction or use for any purpose other than that authorized by Stantec is forbidden.

Client/Project Logo

Client/Project

City of San Juan Bautista

SANITARY SEWER FORCE MAIN

San Juan Bautista, California

File Name: SANJ21-001-I120	KB	MGB	JP	2022.04.01
	Dwn.	Dsgn.	Chkd.	YYYY.MM.DD

Title

STATION DISCHARGE P&ID

Project No.	Scale
184031441	NTS

Revision	Sheet	Drawing No.
	124 of 128	I120

ORIGINAL SHEET - ANSI D

c:\projects\sanj21-001 san juan bap\act\sanj21-001-i120
2022.08.31 7:42:05 PM

CENTRAL/ AUTODIALER

OPERATOR INTERFACE OI DISPLAY

PROGRAMMABLE LOGIC CONTROLLER PLC-100

MOTOR CONTROL CENTER MCC-100

FIELD

ZI 1341 (%)

ZAY 1341 — REMOTE / LOCAL

FLUSH/EQUALIZATION RETURN VALVE

FEEDBACK POSITION S1341 | POSITION CONTROL Z1341 | FAIL UST1341 | LOCAL/ REMOTE Y1341

LSL 1351 | LSH 1351 | LI 1351 (FT)

FLUSH/EQ TANK LEVEL L1351

LI 1351 (FT) ①

LOR | OSC

ZC 1341 | HC 1341 | ZT 1341 | ZC 1341 | R CL | G OP | 480VAC | MO

10 KGAL STORAGE TANK (TYP)

LIT 1351 (FT) ②

TANK 7 TNK1307 | TANK 6 TNK1306 | TANK 5 TNK1305 | TANK 4 TNK1304 | TANK 3 TNK1303 | TANK 2 TNK1302 | TANK 1 TNK1301

TO EMERGENCY STORAGE BASIN 1 — I150

TO INFLUENT MANHOLE — I100

FROM STORAGE PUMP — I100

MOV1341 (FAIL CLOSED)

EQUALIZATION/FLUSH STORAGE TANKS

GENERAL NOTES

A. REFERENCE MECHANICAL DRAWINGS FOR PIPE SIZES REQUIRMENTS.

SHEET NOTES

1. LOCATED IN CONTROL PANEL CP-100
2. PROVIDE AND INSTALL 4" PVC SCH 80 ADJUSTABLE BULKHEAD FITTING FOR LIT INSTALLATION. PROVIDE REDUCER BUSHING AS REQUIRED.

Revision	By	Appd	YYYY.MM.DD
BID SET	MGB	JP	2022.09.01
Issued	By	Appd	YYYY.MM.DD

Permit/Seal

REGISTERED PROFESSIONAL ENGINEER — JEREMY J. POLLET — No. 017557 — Exp. 6-30-2023 — ELECTRICAL — STATE OF CALIFORNIA

Consultant

ControlPoint Engineering, Inc.
3941 Park Drive, Unit 20
El Dorado Hills, CA 95762

T 916.817.1376
F 916.760.1378

Stantec

Stantec Consulting Services Inc.
3875 Atherton Road
Rocklin CA 95765-3716
Tel: (916) 773-8100
www.stantec.com

Copyright Reserved

The Contractor shall verify and be responsible for all dimensions. DO NOT scale the drawing - any errors or omissions shall be reported to Stantec without delay. The Copyrights to all designs and drawings are the property of Stantec. Reproduction or use for any purpose other than that authorized by Stantec is forbidden.

Client/Project Logo

Client/Project

City of San Juan Bautista

SANITARY SEWER FORCE MAIN

San Juan Bautista, California

File Name: SANJ21-001-I130 | KB Dwn. | MGB Dsgn. | JP Chkd. | 2022.04.01 YYYY.MM.DD

Title

FLUSH & EQUALIZATION P&ID

Project No. 184031441 | Scale NTS

Revision | Sheet 125 of 128 | Drawing No. I130

ORIGINAL SHEET - ANSI D

C:\projects\sanj21-001 san juan bost\dwt\sanj21-001-I130 2022.08.31 7:42:31 PM

CENTRAL/ AUTODIALER

OPERATOR INTERFACE OI DISPLAY

PROGRAMMABLE LOGIC CONTROLLER PLC-100

MOTOR CONTROL CENTER MCC-100

FIELD

SI 1411 %

SC 1411 %

UAY 1411 OFF RUN

SI 1412 %

SC 1412 %

UAY 1412 OFF RUN

METERING PUMP 1

SPEED FEEDBACK S1411

SPEED COMMAND SC1411

FAIL UA1411

RUN N1411

METERING PUMP 2

SPEED FEEDBACK S1412

SPEED COMMAND SC1412

FAIL UA1412

RUN N1412

INTERFACE RELAY (TYP)

INTERFACE RELAY (TYP)

ES

LI 1451

TANK LEVEL

VENDOR PROVIDED

R FAULT

Y WARNING

G RUN

MULTIFUNCTION INDICATOR I 1411

SPEED COMMAND SC 1411

PRIME H 1411 A

STT/STP HS 1411 B

MENU HS 1411 C

BACK HS 1411 D

R FAULT

Y WARNING

G RUN

MULTIFUNCTION INDICATOR I 1412

SPEED COMMAND SC 1412

PRIME H 1412 A

STT/STP HS 1412 B

MENU HS 1412 C

BACK HS 1412 D

VENDOR PROVIDED

PI -

PI -

TO INFLUENT WET WELL I100

PULSATION DAMPENER (TYP)

FLOW MONITOR (TYP)

PI -

FS 1411

M

D

PRV

METERING PUMP 1 PMP1411

D

PULSATION DAMPENER (TYP)

FLOW MONITOR (TYP)

PI -

FS 1412

M

D

PRV

METERING PUMP 2 PMP1412

D

LE 1451

VENDOR PROVIDED

4,350 GAL CALCIUM NITRATE STORAGE TANK TNK140

D

D

CHEMICAL FEED SYSTEM

GENERAL NOTES

A. REFERENCE MECHANICAL DRAWINGS FOR PIPE SIZES REQUIRMENTS.

SHEET NOTES

Revision	By	Appd	YYYY.MM.DD
BID SET	MGB	JP	2022.09.01
Issued	By	Appd	YYYY.MM.DD

Permit/Seal

REGISTERED PROFESSIONAL ENGINEER JEREMY J. POLLET NO.017557 Exp.6-30-2023 ELECTRICAL STATE OF CALIFORNIA

Consultant

ControlPoint Engineering, Inc.
3941 Park Drive, Unit 20
El Dorado Hills, CA 95762

T 916.817.1376
F 916.760.1378

Stantec

Stantec Consulting Services Inc.
3875 Atherton Road
Rocklin CA 95765-3716
Tel: (916) 773-8100
www.stantec.com

Copyright Reserved

The Contractor shall verify and be responsible for all dimensions. DO NOT scale the drawing - any errors or omissions shall be reported to Stantec without delay. The Copyrights to all designs and drawings are the property of Stantec. Reproduction or use for any purpose other than that authorized by Stantec is forbidden.

Client/Project Logo

Client/Project

City of San Juan Bautista

SANITARY SEWER FORCE MAIN

San Juan Bautista, California

File Name: SANJ21-001-I140 | KB Dwn. | MGB Dsgn. | JP Chkd. | 2022.04.01 YYYY.MM.DD

Title

CHEMICAL SYSTEM P&ID

Project No. 184031441

Scale NTS

Revision

Sheet 126 of 128

Drawing No. I140

ORIGINAL SHEET - ANSI D

C:\Users\kevin.bush\OneDrive - Stantec\Documents\Projects\SANJ21-001-I140_2022.09.27 P&ID.rvt

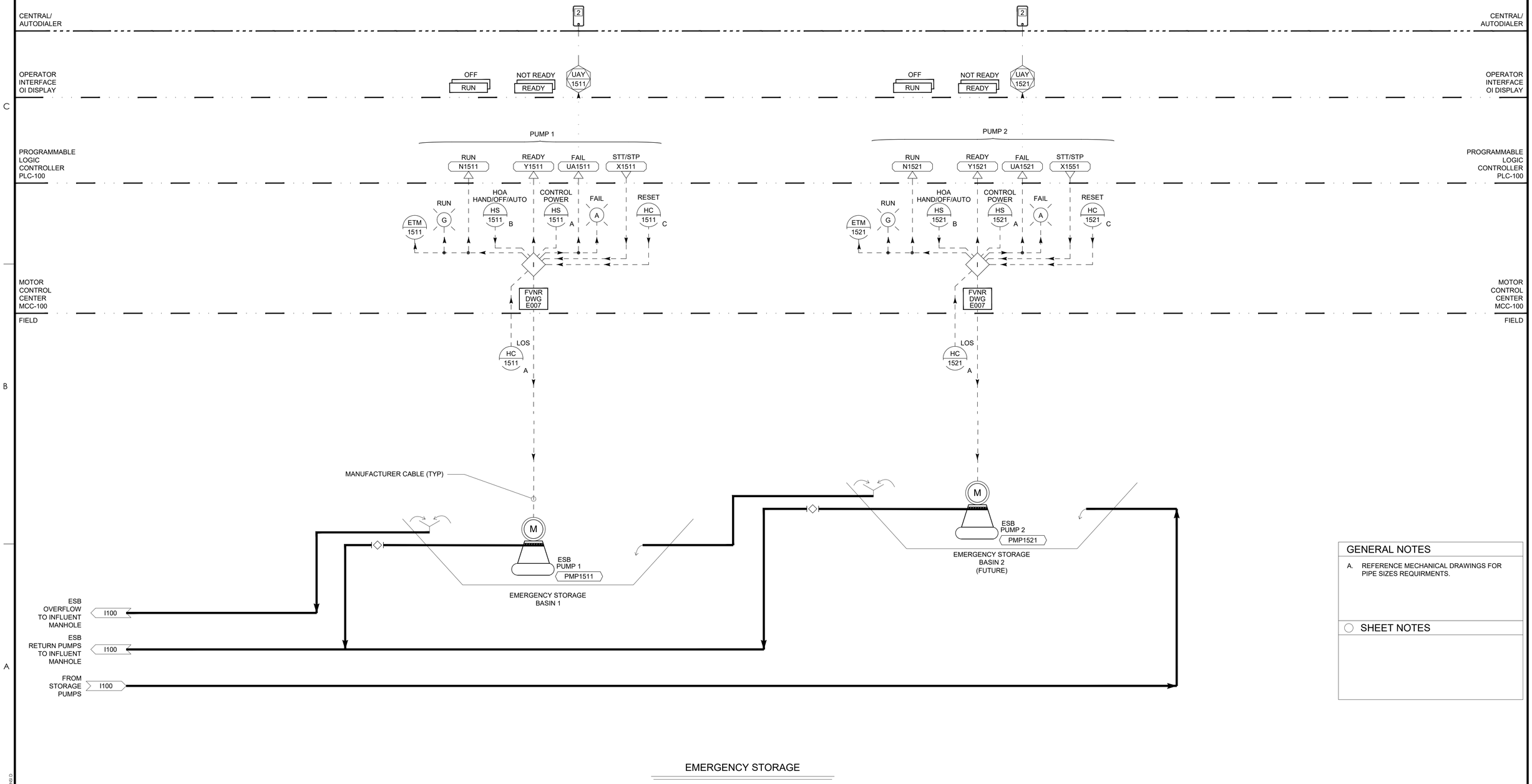

GENERAL NOTES

A. REFERENCE MECHANICAL DRAWINGS FOR PIPE SIZES REQUIRMENTS.

SHEET NOTES

Revision	By	Appd	YYYY.MM.DD
BID SET	MGB	JP	2022.09.01
Issued	By	Appd	YYYY.MM.DD

Permit/Seal

REGISTERED PROFESSIONAL ENGINEER — JEREMY J. POLLET — NO.017557 — Exp.6-30-2023 — ELECTRICAL — STATE OF CALIFORNIA

Consultant

ControlPoint Engineering, Inc.
3941 Park Drive, Unit 20
El Dorado Hills, CA 95762

T 916.817.1376
F 916.760.1378

Stantec

Stantec Consulting Services Inc.
3875 Atherton Road
Rocklin CA 95765-3716
Tel: (916) 773-8100
www.stantec.com

Copyright Reserved

The Contractor shall verify and be responsible for all dimensions. DO NOT scale the drawing - any errors or omissions shall be reported to Stantec without delay. The Copyrights to all designs and drawings are the property of Stantec. Reproduction or use for any purpose other than that authorized by Stantec is forbidden.

Client/Project Logo

Client/Project

City of San Juan Bautista

SANITARY SEWER FORCE MAIN

San Juan Bautista, California

File Name: SANJ21-001-I150

KB	MGB	JP	2022.04.01
Dwn.	Dsgn.	Chkd.	YYYY.MM.DD

Title

EMERGENCY STORAGE P&ID

Project No. 184031441

Scale NTS

Revision

Sheet 127 of 128

Drawing No. I150

ORIGINAL SHEET - ANSI D

C:\projects\sanj21-001 san juan bautista\sanj21-001-i150 2022.08.31 7:44:03 PM

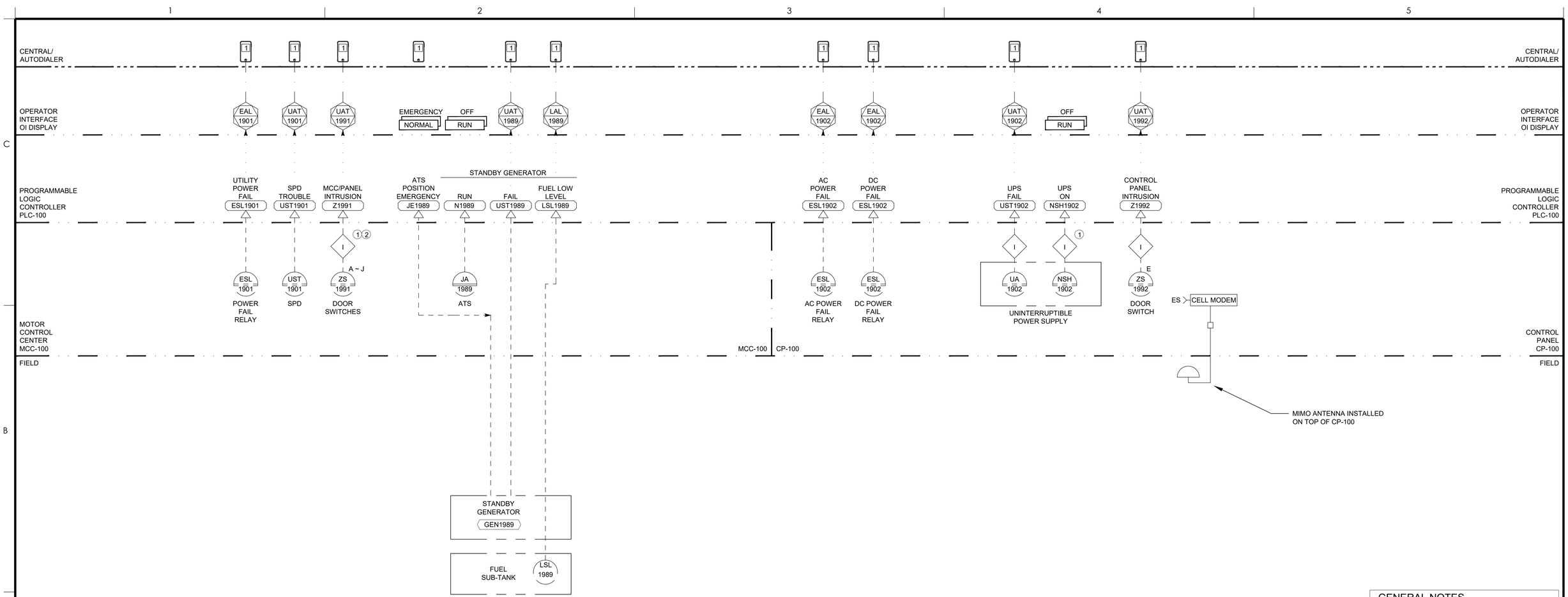

GENERAL NOTES

A. REFERENCE MECHANICAL DRAWINGS FOR PIPE SIZES REQUIRMENTS.

SHEET NOTES

1. INTERFACE RELAYS AS REQUIRED.
2. PROVIDE TERMINAL BLOCKS IN CP-100 FOR EACH INTRUSION SWITCH.

Revision	By	Appd	YYYY.MM.DD
BID SET	MGB	JP	2022.09.01
Issued	By	Appd	YYYY.MM.DD

Permit/Seal

REGISTERED PROFESSIONAL ENGINEER — JEREMY J. POLLET — NO.017557 — Exp.6-30-2023 — ELECTRICAL — STATE OF CALIFORNIA

Consultant

ControlPoint Engineering, Inc.
3941 Park Drive, Unit 20
El Dorado Hills, CA 95762

T 916.817.1376
F 916.760.1378

Stantec

Stantec Consulting Services Inc.
3875 Atherton Road
Rocklin CA 95765-3716
Tel: (916) 773-8100
www.stantec.com

Copyright Reserved

The Contractor shall verify and be responsible for all dimensions. DO NOT scale the drawing - any errors or omissions shall be reported to Stantec without delay. The Copyrights to all designs and drawings are the property of Stantec. Reproduction or use for any purpose other than that authorized by Stantec is forbidden.

Client/Project Logo

Client/Project

City of San Juan Bautista

SANITARY SEWER FORCE MAIN

San Juan Bautista, California

File Name: SANJ21-001-I190	KB	MGB	JP	2022.04.01
	Dwn.	Dsgn.	Chkd.	YYYY.MM.DD

Title

MISCELLANEOUS P&ID

Project No.	Scale
184031441	NTS

Revision | Sheet: 128 of 128 | Drawing No.: I190

ORIGINAL SHEET - ANSI D

C:\Projects\sanj21-001 san juan bautista\civil\sanj21-001-I190 2022.09.01 7:43:41 PM